Vol. IV

DEFENDANTS' EXHIBITS

Supreme Court of the United States

OCTOBER TERM, 1934

No. 255

ALTOONA PUBLIX THEATRES, INC.,
PETITIONERS,

vs.

AMERICAN TRI-ERGON CORPORATION AND TRI-ERGON HOLDING, A. G.

No. 256

WILMER & VINCENT CORPORATION AND LOCUST STREET REAL ESTATE COMPANY, PETITIONERS,

vs.

AMERICAN TRI-ERGON CORPORATION AND TRI-ERGON HOLDING, A. G.

ON WRITS OF CERTIORARI TO THE UNITED STATES CIRCUIT COURT OF APPEALS FOR THE THIRD CIRCUIT

PETITION FOR CERTIORARI FILED AUGUST 6, 1934.

CERTIORARI GRANTED NOVEMBER 5, 1934.

INDEX.

	Vol. I Page
Docket Entries (No. 971)	1
Docket Entries (No. 972)	5
Bill of Complaint (Memorandum for No. 971)	9
Amended Bill of Complaint (No. 971)	9
Answer (Memorandum for No. 971)	18
Amended Answer (No. 971)	18
Bill of Complaint (No. 972)	28
Amendment to Bill of Complaint (No. 972)	40
Answer (Memorandum for No. 972)	42
Amended Answer (No. 972)	42
Order Amending Answers	52
Statement of Evidence	53

PLAINTIFFS' WITNESSES.

Dr. Frederick Holborn—	
Direct Examination	65
Cross-Examination	71
Re-Direct Examination	77
Re-Cross-Examination	79
Dr. Josef Engl—	
Direct Examination	80
Cross-Examination	128
Re-Direct Examination	200
Re-Cross-Examination	222
John M. Joy—	
Direct Examination	222
Cross-Examination	238
Re-Direct Examination	246
William C. Ballard, Jr.—	
Direct Examination	249

Vol. I
Page

William C. Ballard, Jr. (Recalled)—
Cross-Examination 408
Re-Direct Examination 462

Dr. Josef Engl (Recalled)—
Re-Direct Examination 465
Re-Cross-Examination 468
Re-Direct Examination 473
Re-Cross-Examination 474

DEFENDANTS' WITNESSES.

Albert Kindelmann—
Direct Examination 318

Rudolph C. Kneuer—
Direct Examination 320

Albert Kindelmann (Resumed)—
Cross-Examination 321
Re-Direct Examination 328
Re-Cross-Examination 330
Re-Direct Examination 331
Re-Cross-Examination 332

Ferdinand Elsbeck—
Direct Examination 333
Cross-Examination 334
Re-Direct Examination 336
Re-Cross-Examination 336

Harry G. Wrede—
Direct Examination 337
Cross-Examination 339

Albert Kindelmann (Resumed)—
Re-Cross-Examination 341

Louis E. Hammond—
Direct Examination 341
Cross-Examination 352
Re-Direct Examination 366

	Vol. I Page
George K. Thompson—	
Direct Examination	366
Cross-Examination	369
Direct Examination (by Agreement of Counsel)	478
Henry A. Taylor—	
Direct Examination	373
Cross-Examination	384
Re-Direct Examination	400
Re-Cross-Examination	404
Re-Direct Examination	407
Anthony J. Webber—	
Direct Examination	480
Cross-Examination	485
Re-Direct Examination	490
Re-Cross-Examination	491
Harry F. Getcliffe—	
Direct Examination	491
Cross-Examination	492
Re-Direct Examination	496
William C. Duryea—	
Direct Examination	497
Arthur G. Dannell—	
Direct Examination	502
Charles A. Winkler—	
Direct Examination	503
Cross-Examination	503
Re-Direct Examination	504
W. E. Story, Jr.—	
Direct Examination	504
Cross-Examination	516
Re-Direct Examination	524
William C. Duryea (Resumed)—	
Cross-Examination	526
Re-Direct Examination	530
Re-Cross-Examination	532

Vol. I
Page

Henry A. Taylor (Resumed)—
Re-Direct Examination 534

Oscar Steiner—
Direct Examination 535
Cross-Examination 543
Re-Direct Examination 551

Frank N. Waterman—
Direct Examination 557

Henry A. Taylor (Resumed)—
Re-Direct Examination 588
Re-Cross-Examination 588

Jacob T. Tschopp—
Direct Examination 589
Cross-Examination 592
Re-Direct Examination 599

Charles A. Hoxie—
Direct Examination 599
Cross-Examination 615
Re-Direct Examination 629
Re-Cross-Examination 630

Vol. II

Frank N. Waterman (Resumed)—
Direct Examination 631
Cross-Examination 694

Alfred Mueller—
Direct Examination 766
Cross-Examination 770
Re-Direct Examination 781
Re-Cross-Examination 781

Frederick C. Burt—
Direct Examination 853
Cross-Examination 854

PLAINTIFFS' WITNESSES IN REBUTTAL.

	Vol. II Page
William C. Ballard, Jr. (Recalled)—	
Direct Examination	732
William C. Ballard, Jr. (Resumed)—	
Direct Examination	783
William C. Ballard, Jr. (Resumed)—	
Direct Examination	855
William C. Ballard, Jr. (Resumed)—	
Direct Examination	935
Dr. Josef Engl (Recalled)—	
Direct Examination	954
Cross-Examination	959
William C. Ballard, Jr. (Resumed)—	
Cross-Examination	963
Re-Direct Examination	1019
Opinion of November 24, 1933	1027
Memorandum of Corrections of Opinion, Dated November 24, 1933	1036
Plaintiffs' Proposed Findings of Fact	1037
Plaintiffs' Proposed Conclusions of Law	1078
Order	1090
Index to Defendants' Proposed Findings of Fact and Conclusions of Law	1091
Defendants' Proposed Findings of Fact and Conclusions of Law	1101
Order	1129
Interlocutory Decree (No. 971)	1130
Petition for Appeal (No. 971)	1133
Order Allowing Appeal and Supersedeas Order (No. 971)	1133
Assignment of Errors (No. 971)	1135
Bond for Costs on Appeal and Supersedeas (No. 971)	1136
Citation (No. 971)	1138
Interlocutory Decree (No. 972)	1139
Petition for Appeal (No. 972)	1143
Order Allowing Appeal and Supersedeas Order (No. 972)	1144

	Vol. II Page
Assignment of Errors (No. 972)	1145
Bond for Costs on Appeal and Supersedeas (No. 972)	1147
Citation (No. 972)	1149
Order Approving Record	1150
Stipulated Præcipe for Record on Appeal	1151
Stipulation as to Correctness of Record	1154
Clerk's Certificate	1155
Proceedings in U. S. C. C. A., Third Circuit	**1156**
Minute Entry of Argument and Submission	**1156**
Opinion, Buffington, J.	**1157**
Judgment, Case No. 5392	**1173**
Judgment, Case No. 5393	**1173**
Clerk's Certificate	**1174**
Opinion, Per Curiam, on Request to Change Opinion	**1175**
Order Correcting Opinion	**1180**
Orders Allowing Certiorari	**1182**

INDEX TO PLAINTIFFS' EXHIBITS.

Ex. No.	Description	Offered Vol. I Page	Printed Vol. III Page
1	Certified Copy of File Wrapper and Contents of Patent in Suit, Including Copy of Patent in Suit	53	1
1-A	Book of Patent References Cited in Prosecution of Application of Patent in Suit	53	123
2	Certified Copy of Disclaimer Re Patent in Suit	53	227
3	Certified Copy of Vogt, et al., German Application, Filed May 22, 1920, and Translation	53	230
4	Certified Copy of Vogt, et al., German Application, Filed March 24, 1921, and Translation	53	242
5	Certified Copy of Vogt, et al., German Application, Filed April 9, 1921, and Translation	54	254
6	Certified Copy of Vogt, et al., German Application, Filed January 23, 1922, and Translation	54	263
7	Vogt, et al., United States Patent No. 1,590,185	54	269
8	Certified Copy of File Wrapper and Contents, Vogt, et al., U. S. Application Ser. No. 458,626, Filed April 4, 1921	54	...
9	Certified Copy and Translation, Vogt, et al., German Application of March 3, 1919	54	...
10	Certified Copy of Decision and Findings of Judge Adkins, Supreme Court, District of Columbia ...	55	276
11	Certified Copy, Vogt, et al., Belgium Patent No. 292,863, and Translation	55	...
12	Copy of Vogt, et al., French Patent No. 532,651, Published February 9, 1922, With Translation ...	55	...
12-A	Certified Copy Vogt, et al., German Application, Filed April 16, 1919, With Translation	55	...
13	Correspondence Between Ward, Crosby & Smith, et al., and R. C. A., etc.	57	301
14-A	ertified Copy of Assignment From Vogt, et al., to Tri-Ergon, Ltd., Dated June 3, 1924, Referring to Application for Patent in Suit as Serial No. 545,377	58	...

Ex. No.	Description	Offered Vol. I Page	Printed Vol. III Page
14-B	Photostat of Agreement and Assignment Between Tri-Ergon, A. G., and William Fox, Dated September 4, 1928, With Schedule of Patents and Applications, Including Application Serial No. 545,377 for Patent in Suit; and Attached Copy of License to Tri-Ergon Musik, A. G., Including Schedule of Patents and Applications	58	...
14-C	Translation of License to Tri-Ergon Musik, A. G., Attached to Exhibit 14-B	58	...
14-D	Photostat of Assignment From Tri-Ergon, A. G., to William Fox, Dated February 15, 1929	58	...
14-E	Photostat of Assignment From William Fox to American Tri-Ergon Corporation, Dated June 6, 1930, Referring to Patent in Suit by Number and by Serial Number of Application Therefor	59	...
14-F	Photostat of Agreement Between Tri-Ergon Musik, A. G., and Tri-Ergon Holding, A. G., Dated November 10, 1931, and Attached to "A. E. G." License Re Foreign Rights, and Translation of Said License	59	...
14-G	Photostat of Agreement Between Tri-Ergon, A. G., and Tri-Ergon Holding, A. G., Dated November 10, 1931	59	...
15	Stipulation Between Counsel Covering Various Formal Matters and Certain Details and Diagrams of Defendants' Apparatus	59	...
15-A to 15-F, Inclusive	Diagrams (Photostats) Attached to Stipulation	59	327
16-A to 16-F, Inclusive	Charts of Defendants' Alleged Infringing PS1 Apparatus; D to F, Charts of Defendants' Alleged Infringing PS16 Apparatus	65	...
17	Photostat Showing Vogt, et al., Sound and Picture Reproducing Machine Used in Alhambra Theatre Demonstration, Berlin, September, 1922	121	335

INDEX TO PLAINTIFFS' EXHIBITS—Continued.

Ex. No.	Description	Offered Vol. I Page	Printed Vol. III Page
18	Photostat Showing Early Vogt, et al., Sound Recording and Reproducing Machine	121	336
19	Photostat Showing Another View of Same	121	337
19-A	Photostat Showing Early Vogt, et al., Sound and Picture Recording and Reproducing Machine	121	338
20	Strip of Specially Perforated Sound and Picture Film, 1923 (Physical)	101	...
21	Short Strip of Standard Film (Physical)	102	...
22	Sample Invitation Card for Vogt, et al., Alhambra Theatre Demonstration, Berlin, September 27, 1922 (Translation in Pencil on Reverse Side)	104	341
23	Photograph of One of Twenty-five Vogt, et al., 1924-1925 Sound Picture Heads	108	343
24	Another View of Same	108	344
25	Slip From Patentee's Notebook Showing Photographed Image of Typical Narrow Slits Tested, April, 1921 (Physical)	112	...
26	Copy of Vogt, et al., U. S. Amplifier Tube Patent 1,587,786 (Application Filed in U. S. April 4, 1921; in Germany December 2, 1919)	121	347
27-A, 27-B	Prints Showing One of Vogt, et al., 1925 Sound Picture Heads as Brought to America in 1926	124	353
28	Cut of Vogt, et al., Tri-Ergon Five-Element "Pentode" Tube Referred to by Witness Engl	221	355
29, 30, 31	Photographs of Plaintiffs' Exhibit 93 Machine, Showing One of Twenty-five Vogt, et al., 1924-1925 Sound Picture Heads as Modified as per Figure 2 of Patent in Suit	237	356
32	Pencil Sketch Made by Witness Ballard Showing Irregular Areas Occurring Adjacent Film Perforations	317	359
33	Sample Vogt, et al., Flywheel From One of Twenty-five Vogt, et al., Machines, and of the Same Shape and Design as Brought to U. S. by Dr. Engl in 1926-1927 (Physical)	468	...

Ex. No.	Description	Offered Vol. I Page	Printed Vol. III Page
34-A	Page 1, Vol. 6, Senate Documents, First Session 67th Congress, Comprising Message From the President to the U. S. Senate Re Treaty of Berlin	476	...
34-B	Page 11 to End of Volume of Above Vol. 6, Comprising Versailles Treaty	476	...
34-C	Government Publication, "Treaty Series No. 658 Re Treaty of Berlin and Treaty of Versailles"	476	...
34-D	Congressional Record, Vol. 61, No. 131 of 1921, Pages 7113-7116, 7121-7122; and Vol. 61, No. 132, Page 7173, Comprising Debates Re Treaty of Berlin	477	...
		Vol. II	Vol. III
35	Steiner General Electric Patent 1,817,781	931	363
36	Copy of File Wrapper and Contents of Application for Above Steiner Patent	931	...
37 (For Identification)	Sketch Made by Witness Tschopp (Defts'. Ex. 49; to be Reproduced With Defts'. Exhs. and Marked With Both Numbers)	599	...
38	Copy of Hoxie General Electric Patent No. 1,756,864	930	369
39	Certified Copy of File Wrapper and Contents, Hoxie Patent No. 1,758,794	1021	...
40	Copy of Bardy Patent No. 1,258,298	930	377
41 and 42	Photographs of Bell & Tainter Machine in Smithsonian Institution in Washington	929	393
43	Edison Phonograph Catalogue of October 1, 1911, Showing Construction of "Triumph" Machine	743	395
44	Article by Edward W. Kellogg, on Page 653 to 670, Inclusive, of Journal of Society of Motion Picture Engineers, Issue of November, 1930	763	416
45	Maurer RCA Patent No. 1,891,387	764	435
46	Pencil Drawings Comparing Figure 1 of Vogt, et al., German Patent No. 387,058 and Defendant-ants' Alleged Model Thereof	945	447

INDEX TO PLAINTIFFS' EXHIBITS—Continued.

Ex. No.	Description	Offered Vol. II Page	Printed Vol. III Page
47	Article From "Power" of May 3, 1921, by Professor Trowbridge, Entitled "A New Type of Indicator for High Speed Internal Combustion Engines" ..	891	448
47-A, 47-B, 47-C	Photographs of Machine in Smithsonian Institution of Type Corresponding Generally to Figure 1 of Bell & Tainter Patent No. 341,214	930	453
48	Article by Johannes Rolle in the Licht Bild Theatre Besitzer, Entitled "The Film as a Carrier of Sound Waves," in 1922, Issue No. 49, and Translation Thereof	930	457
49	Copy of Heisler Patent No. 1,758,832	931	471
50	Copy of Heisler Patent No. 1,768,403	931	477
51	Copy of Kellogg Patent No. 1,780,681	931	483
52	Copy of Heisler Patent No. 1,808,551	931	487
53	Copy of Kellogg Patent No. 1,827,588	931	495
54	Copy of File Wrapper and Contents of Heisler Patent No. 1,831,562	932	...
55	Copy of Heisler Patent No. 1,839,151	932	503
56	Copy of File Wrapper and Contents of Taylor Patent No. 1,847,636	932	...
57	Copy of Maurer Patent No. 1,891,388	932	511
58	Copy of File Wrapper and Contents of Page Patent No. 1,892,218	932	...
59	Copy of Kellogg Patent 1,892,554	932	521
60	Copy of Robinson Patent No. 1,880,106	932	529
61	Copy of File Wrapper and Contents of Cawley Patent No. 1,878,577, Ser. No. 357,259, Filed April 23, 1929	933	...
62	Copy of File Wrapper and Contents of Cawley Patent No. 1,594,662, Application Filed as Ser. No. No. 328,299, Allegedly Filed October 3, 1919	933	...
63	Certified Copy of Full-Sized Drawings as Originally Filed October 3, 1919, in Cawley Application No. 328,299	933	...

Ex. No.	Description	Offered Vol. II Page	Printed Vol. III Page
64	Copy of File Wrapper and Contents of Cawley Patent No. 1,420,304, Application Filed December 13, 1919, Ser. No. 344,708	933	...
65	Certified Copy of File Wrapper and Contents of Cawley Patent No. 1,698,536, Application Filed Juy 21, 1923, Ser. No. 653,704	933	...
66	Certified Copy of File Wrapper and Contents of Cawley Patent No. 1,816,360, Application Filed January 8, 1921, Ser. No. 435,983	934	...
67	Certified Copy of File Wrapper and Contents of Cawley Patent No. 1,825,439, Application Allegedly Filed September 18, 1929, Ser. No. 393,072	934	...
68	Certified Copy of File Wrapper and Contents of Cawley Patent No. 1,825,441, Application Allegedly Filed January 8, 1921, Ser. No. 435,984	934	...
69	Certified Copy of File Wrapper and Contents of Cawley Patent No. 1,825,438, Application Allegedly Filed September 16, 1929, Ser. No. 393,071	934	...
70	Certified Copy of Assignment as Recorded From Aloysius Cawley to Radio Corporation of America, Recorded in U. S. Patent Office, Liber R/140, Page 318 of Transfers of Patents	934	537
71	Certified Copy of Assignment From Aloysius Cawley to RCA Recorded in Liber R/140, Page 315 of Transfers of Patents	934	541
72	Assembly From RCA PS1 Apparatus, Comprising a Gear Plate and Two Springs Removed From Flywheel Assembly (Physical)	935	...
73	Sample Simplex 15-Tooth Takeup Sprocket (Physical)	935	...
74	Sample Motion Picture Film Sprocket Having 32 Teeth at Each Edge (Physical)	935	...
75	(See Exhibit No. 94.)		
76	File Wrapper of the Pfannenatiehl Patent No. 1,728,304	953	...

Ex. No.	Description	Offered Vol. II Page	Printed Vol. III Page
77	Sheet in Patentees' Notebook Between May 11 and May 20, 1921, and Translation Thereof	955	...
78	Photographic Slip Dated May 5, 1921, From Patentees' Notebook Showing Photographed Images of Typical Narrow Slits Tested (Similar to Plaintiffs' Ex. 25) and Translation	955	...
79	Sheet From Patentees' Notebook, February 10, 1921, and Translation	955	...
80	Additional Sheet in Patentees' Notebook Dated February 10, 1921, and Translation	955	...
81	Sheet in Patentees' Notebook Showing Linear Relationship Between Glow Discharge Current and Density, Dated January 26, 1921, and Translation	956	...
82	Page Dated January 26, 1921, in Patentees' Notebook, Including Curve Sheet Signed by Dr. Engl and Showing Linear Relationship Between P. E. Cell Currents and Slit Opening and Translation	957	...
83	Sheet in Patentees' Notebook, Dated September 23, 1920, and Translation, Showing Optical Slit Arrangements and Translation	957	...
84	Article in General Electric Review, September, 1928, Entitled "Characteristics of Photoelectric Tubes," by Dr. Koller and H. A. Breeding	1021	547
85	Article From Science Abstracts, 1915, Section A, Published January 17, 1916, Entitled "Persistence of the Current in Photoelectric Cells After the Suppression of the Exciting Light"	1021	551
86	Article by Herbert E. Ives in Astro-Physical Journal of November 7, 1917, Found at Pages 241 to 248	1021	552
87	Copy of File Wrapper and Contents of Heisler Patent No. 1,771,922	1021	...
88	Copy of File Wrapper and Contents of Heisler Patent No. 1,793,399	1021	...

Ex. No.	Description	Offered Vol. II Page	Printed Vol. III Page
89	Tri-Ergon Sound and Picture Head, Corresponding to Figures 3, 4, 5 and 6 of Patent in Suit, as Demonstrated (Physical)	1022	...
90-A, 90-B	Photographs of Exhibit 89	1022	563
91	Pair of New Helical Gears Referred to by Witness Ballard and Used in Last Demonstration of Plaintiffs' Exhibit 89 Machine (Physical)	1022	...
92	Spring Used Between Flywheel and Arm in Plaintiffs' Last Demonstration of Exhibit 89 Machine (Physical)	1022	...
93	Sound and Picture Head of Second Tri-Ergon Machine as Demonstrated, With Film Movement Representing Figure 2 of Patent in Suit (Physical)	1023	...
94	Page 301 Only of the Transactions of Society of Motion Picture Engineers, Vol. XI, No. 30 of 1927, Referred to by Witness Ballard (This Exhibit Also Received in Evidence as Plaintiffs' Exhibit No. 75)	1023	567

INDEX TO DEFENDANTS' EXHIBITS.

Ex. No.	Description	Offered Vol. I Page	Printed Vol. IV Page
1	Simplex Projector Head, Model 100, of The Precision Machine Co., Inc. (Physical)	319	...
2	Copy of 1914-1915 Catalogue of The Precision Machine Co., Inc.	319	571
3	Section Model of Simplex Projector (Physical)	320	...
4	Copy of Page of Sales Record Book of the International Projector Corporation, Referred to by Witness Kneuer	321	587
5	Modern Simplex Projector Demonstrated by Witness Kindelmann (Physical)	330	...
6	Copy of 1910 Catalogue of Nicholas Power Company	333	591
7	Section Model of Power's Intermittent Movement (Physical)	334	...
8	Power's Projector Head (Physical)	339	...
9-A	Copy of Page of Sales Record Book of Nicholas Power Company Showing First Shipment of Model No. 6 Power's Projector	338	611
9-B	Copy of Page of Above Sales Record Book Showing Sale of Projector Head No. 24,526 (Defendants' Exhibit No. 8)	338	612
9-C	Copy of Page of Above Sales Record Book Showing Sale of Intermittent Movement No. 26,506 (Defendants' Exhibit No. 8)	338	613
10	Copy of Catalogue of Edison Kinetoscopes	339	615
11	Edison Kinetophone (Physical)	345	...
12	Edison Kinetoscope (Physical)	347	...
13-A to 13-E	Newspaper Clippings Referred to by the Witness Hammond	347	625
13-F	Article in Munsey's Magazine of March, 1913, Referring to the Edison Kinetophone	350	631
14	Lease Between American Tel. & Tel. Co. and Edison Company With Attached List of Materials	368	637

INDEX TO DEFENDANTS' EXHIBITS—Continued.

Ex. No.	Description	Offered Vol. I Page	Printed Vol. IV Page
15	Photograph of Original Kinetophone Used at San Francisco Fair	369	643
16	Photograph Showing Application of Edison Synchronizer to a Power Projector	369	645
17	Tracing Entitled "Assembly Recording Machine, Kinetophone, Edison Laboratory," Dated October 4, 1913	374	...
18	Tracing af Balance Wheel of Kinetophone Recording Machine, Dated October 1, 1913	376	...
19-A	Material List for Recording Machine 896, Edison Laboratory, Dated October 7, 1913	376	...
19-B to 19-LLL, Inclusive	Sixty-three Drawings Comprising Sub-Assembly and Detail Drawings of Edison Kinetophone Referred to by Witness Taylor	535	...
20	Photograph Showing Camera and Synchronizer Driven by Motor, Referred by Witness Taylor	377	649
21	Drawing Entitled "Kinetoscope Recording Machine Pedestal"	378	650
22	Photograph Showing Synchronizer of the Kinetoscope	381	651
23	Copy of Letter of January 14, 1915, to Witness Taylor in Vienna From Chief Engineer of Edison Company Regarding the Fire at Kinetophone Studio	381	653
24	Copy of Letter of March 2, 1915, From Imperial Counsel to Imperial Royal Police, Vienna, Re Witness Taylor Leaving Vienna	382	656
25	Cylindrical Record Entitled "The Birth of the Telephone," by Thomas A. Watson (Physical)	479	...
26	Cylindrical Record Entitled "The Edison Minstrels" (Physical)	479	...
27	Two Pieces of Film Made in Vatican, Rome, June, 1914 (Physical)	384	...

Ex. No.	Description	Offered Vol. I Page	Printed Vol. IV Page
28	Ernemann Projector Marked "Ernemann II" (Physical)	478	...
29	Sketch Made by Witness Engl of Disclosure of German Patent No. No. 387,058	478	659
30	Sketch Made by Mr. Neave and Referred to by Witness Engl	478	660
31	Edison Triumph Model Reproducing Machine (Physical)	492	...
32	Separate Motor for Edison Triumph Machine (Physical)	496	...
33	Belt for Edison Triumph Machine (Physical)	496	...
34	Recording Element for Edison Triumph Machine (Physical)	484	...
35-A, 35-B	Sketches by Witness Webber Illustrating the Method of Applying the Recording Arm on the Edison Triumph Machine	484	663
36	Duryea-Trowbridge Oscillograph (Physical)	500	...
37	Specimen of Record Made on Duryea-Trowbridge Oscillograph (Physical)	500	...
38	Strip of Paper With Black Line Indicating the Approximate Size of the Line of Light From the Cylindrical Lens of the Duryea-Trowbridge Oscillograph (Physical)	500	...
39	Type 11 Victrola (Physical)	504	...
40	Copy of Pages From Dr. Story's Notebooks; Notebook No. 3—Pages 23, 25, 56, 57, 58, 61, 73, 74; Notebook No. 4—Pages 220, 221, 226, 252, 253, 263, 264, 270, 278, 283, 284	515	667
41	Hull Patent No. 1,313,187	524	687
42	Sketch of Kinetophone Reproducing Machine Made by Witness Taylor	535	693
43	Hoxie Combined Camera and Reproducer (Physical)	589	...
44	Oscillograph Motor and Attached Flywheel (Physical)	589	...

INDEX TO DEFENDANTS' EXHIBITS—Continued.

Ex. No.	Description	Offered Vol. I Page	Printed Vol. IV Page
45	Hoxie Reproducer (Physical)	589	...
46	Photoelectric Cell Similar to the Type Used Originally With the Preceding Hoxie Machines (Physical)	589	...
47	Pliotron Similar to That Used by Hoxie (Physical)	589	...
48	Copies of Pages 134 to 141, Inclusive, of Time Book Kept by Witness Tschopp, Entries From February 10, 1921, to April 16, 1921	592	697
49	Sketch of Flyball Governor Made by Witness Tschopp	599	701
50	Sketch of Arrangement for Talking Motion Pictures Made by Witness Hoxie, December 12, 1920	603	702
51	Original Hoxie Record Entitled "A New Type of Phonograph," Record Dated March 9, 1921, (Physical)	606	...
52	Photograph No. 116072, Dated July 21, 1921, of Hoxie Reproducer (Defendants' Exhibit No. 45)	609	705
53	Photograph No. 116688, Dated December 1, 1921, of Hoxie Combined Camera and Reproducer (Defendants' Exhibit No. 43)	609	706
54	Photograph No. 116687, Dated December 1, 1921, of Hoxie Combined Camera and Reproducer (Defendants' Exhibit No. 43)	609	707
55	Photograph No. 118879, Dated January 11, 1923, of Machine Entitled "Pallophotophone Recorder"	610	708
56	Photograph No. 118878, Dated January 11, 1923, of Machine Entitled "Pallophotophone Reproducer"	610	709
57	Newspaper Clipping of February 18, 1923, Showing Model No. 177 Machine and Mr. Hoxie	610	710
58	Photograph No. 505093, Dated April 17, 1928, of Machine Entitled "Pallophotophone Construction"	610	711
59	Photograph No. 505092, Dated April 17, 1928, of Machine Entitled "Pallaphotophone Construction"	610	712
60	Photograph No. 120231, Dated July 6, 1923, of Pallophotophone Recorder Model No. 205	610	713

Ex. No.	Description	Offered Vol. I Page	Printed Vol. IV Page
61	Photograph No. 120232, Dated July 6, 1923, of Pallophotophone Recorder Model No. 205	610	714
62	Photograph No. 120490, Dated August 28, 1923	610	715
63	Photograph No. 435433, Dated January 28, 1926, of Pallophotophone Reproducer	610	716
64	Photograph No. 500215, Dated July 13, 1926, of Talking Motion Picture Recorder, Model 291	610	717
65	Photograph No. 500216, Dated July 13, 1926, of Talking Motion Picture Recorder, Model 291	610	718
66	Photograph No. 500166, Dated July 7, 1926, of Demonstration of Talking Pictures	610	719
67	Sketch Made by Mr. Hoxie on December 12, 1920, Showing Proposed Arrangement for Making Master Phonograph Records	615	720
Ex. No.		Vol. II	Vol. IV
68	Diagram of RCA Victor Photophone Recording System	634	721
69	Diagram of RCA Victor Photophone Reproducing System	634	723
70	Specimens of Sound Records of Variable Area and Variable Density Types	637	725
71	Copy of Title Page and Pages 407, 408, 409 and 410 of Book Entitled "A Manual of Machinery and Millwork," by Rankine	647	726
72	Model Demonstrated by Witness Waterman to Show Damping of Springs and Phonograph Turntables (Physical)	673	...
73	File Wrapper and Contents of Edison Patent No. 227,679, Granted May 18, 1880	792	...
74	Defendants' Prior Art Book No. 1	794	731c
75	Defendants' Prior Art Book No. 2	796	731c
76	Defendants' Alleged Infringing Apparatus PS1, Including Turntable and Stand (Physical)	796	...

Ex. No.	Description	Offered Vol. II Page	Printed Vol. V Page
76-A	Photograph of PS1 Apparatus, Defendants' Exhibit No. 76	796	1413
77	Defendants' Alleged Infringing Apparatus PS16 (Physical)	796	....
77-A	Photograph of PS16 Apparatus, Defendants' Exhibit No. 77	796	1417
78	Defendants' Model of Figure 1 of Vogt, Massolle and Engl German Patent No. 387,058 (Physical)	797	....
78-A, 78-B, 78-C	Photographs of Model of German Patent No. 387,058, Defendants' Exhibit No. 78	797	1421
79	Defendants' Model of Figure 5 of Patent in Suit (Physical)	798	....
79-A, 79-B, 79-C	Photographs of Model of Figure 5, Defendants' Exhibit No. 79	798	1429
80	Defendants' Machine in Which Models of German Patent No. 387,058 and Figure 5 of Patent in Suit Were Demonstrated (Physical)	798	....
80-A	Photograph of Defendants' Machine, Defendants' Exhibit No. 80	798	1437
81	Defendants' Model of Amet Drive, as Demonstrated in Place of Spring Drive of Figure 5 of Patent in Suit (Physical)	799	....
81-A	Photograph of Amet Drive, Defendants' Exhibit No. 81	799	1441
82	Defendants' Model of Spring Drive of Constable Patent No. 1,425,177, as Demonstrated, in Place of Spring Drive of Figure 5 of Patent in Suit (Physical)	799	....
82-A	Photograph of Constable, Drive, Defendants' Exhibit No. 82	799	1445
83	Defendants' Model of Machine of Constable Patent No. 1,425,177 (Physical)	800	....
83-A, 83-B, 83-C	Photographs of Constable Model, Defendants' Exhibit No. 83	800	1449
84	Defendants' Model Referred to as Edison Skeleton Model (Physical)	801	....

Ex. No.	Description	Offered Vol. II Page	Printed Vol. V Page
84-A	Photograph of Edison Skeleton Model, Defendants' Exhibit No. 84	801	1457
85	Defendants' Model of Bell & Tainter Patent No. 341,214 (Physical)	802	....
85-A, 85-B	Photographs of Bell & Tainter Model, Defendants' Exhibit No. 85	802	1461
86	Defendants' Model of French Patent No. 472,467 to Dragoumis, et al. (Physical)	802	....
86-A	Photograph of Dragoumis Model, Defendants' Exhibit No. 86	802	1467
87	Defendants' Model Referred to as Reel Film Model (Physical)	803	....
87-A	Photograph of Reel Film Model, Defendants' Exhibit No. 87	803	1471
88	Defendants' Model of French Patent No. 414,788 to Compagnie de Phonographe, et al. (Physical)	804	....
88	Photograph of French 414,788 Model and Victrola, Defendants' Exhibits Nos. 88 and 39, Respectively	804	1475
89-A to 89-K	Cylindrical Disc and Film Records Used at Defendants' Demonstration (Physical) as follows:		
89-A	Cylindrical Record With Speech and Waltz for Edison Kinetophone (Defendants' Exhibit No. 11)	804	....
89-B	Cylindrical Record With Piano for Edison Kinetophone	804	....
89-C	Cylindrical Record With 512 Cycles for Edison Kinetophone	804	....
89-D	Cylindrical Record With Speech, Waltz and Piano for Edison Triumph (Defendants' Exhibit No. 31)	804	....
89-E	Cylindrical Record With 512 Cycles for Edison Triumph	804	....

Ex. No.	Description	Offered Vol. II Page	Printed Vol. V Page
	89-F—Thin Cylindrical Record With Speech for Edison Triumph	804	....
	89-G—Thin Cylindrical Record With Waltz for Edison Triumph	804	....
	89-H—Film With Speech and Waltz for Reel Film Machine (Defendants' Exhibit No. 87)	804	....
	89-I—Film Loop With Waltz for Edison Skeleton Machine (Defendants' Exhibit No. 84)	804	....
	89-J—Film Loop With Speech and March for Dragoumis Machine (Defendants' Exhibit No. 86)	804	....
	89-K—Victor Record With Hungarian Rhapsody for General Phonograph and Victrola (Defendants' Exhibits Nos. 88 and 39, Respectively)	804	....
	89-R—Photograph of Defendants' Exhibits Nos. 25, 26, 51, 89-A to 89-K, and Other Records and Films	807	1481
	89-S—Photograph of Edison Kinetophone, Defendants' Exhibit No. 11, as Demonstrated With Mechanical Reproduction	807	1483
	89-T—Photograph of Edison Kinetophone, Defendants' Exhibit No. 11, as Demonstrated With Electrical Reproduction	808	1485
	89-U—Photograph of the Edison Triumph Machine, as Demonstrated With Electrical Reproduction	809	1487
	89-V—Photograph of Hoxie Reproducer, Defendants' Exhibit No. 45, as Operated at Defendants' Demonstration	809	1489
	89-W—Photograph of Room at Jermyn Hotel in Which Machines Were Located at Time of Defendants' Demonstration	809	1491
	89-X—Photograph of Adjoining Room Wherein Parties Heard Reproductions	810	1493

INDEX TO DEFENDANTS' EXHIBITS—Continued.

Ex. No.	Description	Offered Vol. II Page	Printed Vol. V Page
90-A, 90-B	File Histories, Including Applications as Originally Filed, of Clark Patents Nos. 1,367,663 and 1,388,515	810	....
91	File History, Including Application as Originally Filed, of Constable Patent No. 1,425,177	810	....
92	Application as Originally Filed of Trowbridge Patent No. 1,447,913	811	....
93	Application as Originally Filed of Ries Patent No. 1,473,976, Granted November 13, 1923, and Ries Patent No. 1,607,480, Granted November 16, 1926, Both Being Based Upon One Application, Serial No. 769,114, Dated March 12, 1913	811	....
94	Application as Originally Filed of Cawley Patent No. 1,710,677, Granted April 23, 1929, and Cawley Patent No. 1,878,577, Granted September 20, 1932, Both Patents Being Based Upon the Same Original Application, Serial No. 328,299, Filed October 3, 1919	813	1495
95	Application as Originally Filed of Cawley Patents Nos. 1,825,438, 1,825,439, 1,825,440 and 1,825,441, Granted September 29, 1931, All Four Patents Being Based Upon the Same Original Application, Serial No. 435,984, Filed January 8, 1921	813	1517
96	Application as Originally Filed of Kunz Patent No. 1,381,474, Granted June 14, 1921	814	....
97	Application as Originally Filed of Compton Patent No. 1,567,424, Granted December 29, 1925	814	....
98	File History and Contents of German Patent No. 387,058 to Vogt, Massolle and Engl, With Translation	814	....
99	Nullity Proceedings in German Patent Office, Entitled "Herman Greiff v. Tri-Ergon Holding, A. G., et al., and Electrical Research Products, Inc., v. Tri-Ergon Holding, A. G., et al." Relating to German Patent No. 387,058, With Translations	815	....

INDEX TO DEFENDANTS' EXHIBITS—Continued.

Ex. No.	Description	Offered Vol. II Page	Printed Vol. V Page
100	File History of German Patent No. 389,317 to Massolle, Vogt and Engl, With Translation	815	....
101	Nullity Proceedings in German Patent Office Re German Patent No. 389,317 to Massolle, Vogt and Engl, With Translation	815	....
102	File History and Contents of German Patent No. 389,318 to Massolle, Vogt and Engl, With Translation	815	....
103	Nullity Proceedings in German Patent Office Re German Patent No. 389,318 to Massolle, Vogt and Engl, With Translation	816	....
104	File History of German Patent No. 389,319 to Massolle, Vogt and Engl, With Translation	816	....
105	Nullity Proceedings in German Patent Office With Respect to German Patent No. 389,319 to Massolle, Vogt and Engl, With Translation	816	....
106	German Patent No. 387,058 to Vogt, Massolle and Engl, With Translation	816	1543
107	German Patent No. 389,317 to Massolle, Vogt and Engl, With Translation	817	1549
108	German Patent No. 389,318 to Massolle, Vogt and Engl, With Translation	817	1553
109	German Patent No. 389,319 to Massolle, Vogt and Engl, With Translation	817	1559
110	British Patent No. 178,133 to Massolle, Vogt and Engl, Accepted January 4, 1923	817	1565
111	British Patent Office Certificate, Containing Application as Open to Public Inspection of British Patent No. 178,133 to Massolle, Vogt and Engl, Corresponding Application as Originally Filed in Germany and Translation, and Assignment of August 16, 1924, From Patentees to Tri-Ergon, A. G., Zurich	818	....

Ex. No.	Description	Offered Vol. II Page	Printed Vol. V Page
112	German Patent No. 417,967 to Vogt, Engl and Massolle, Filed March 14, 1919, Granted August 22, 1925, With Translation	818	1569
113-A, 113-B	Two Nullity Decisions of German Patent Office Re German Patent No. 417,967 to Vogt, Engl and Massolle, With Translations	819	....
114	Certificate of Smithsonian Institution Re Berliner Gramophones and Bell & Tainter Machines	820	1575
115-A, 115-B, 115-C, 115-D	Certificate and Three Photographs of Machine Known as "Berliner Gramophone With Clark's Improvement, Museum No. 253,757," Received by Smithsonian Institution April 6, 1909	820	1583
116-A, 116-B, 116-C, 116-D	Certificate and Three Photographs of Machine Known as "Berliner Gramophone, Museum No. 307,204," Received by the Smithsonian Institution on January 14, 1921	821	1591
117-A, 117-B, 117-C, 117-D	Certificate and Three Photographs of Machine Known as "Bell & Tainter Machine, Museum No. 287,660," Received by Smithsonian Institution November 30, 1926	822	1599
118-A, 118-B, 118-C, 118-D	Certificate and Three Photographs of Machine Known as "Bell & Tainter Machine, Museum No. 287,653," Received by Smithsonian Institution November 30, 1930	822	1607
119-A, 119-B, 119-C, 119-D	Certificate of Smithsonian Institution, Consisting of Four Sheets, Showing Receipt of "Instruction for the Management and Operation of Edison's Speaking Phonograph"	822	1615
120-A, 120-B	Certificate of Smithsonian Institution Certifying Copy of Above "Instruction," etc.	822	1621
121	Separate Film Gate of Defendants' Machine PS1 (Physical)	823	....
122	Separate Flywheel Assembly of Defendants' Machine PS1 (Physical)	823	....

Ex. No.	Description	Offered Vol. II Page	Printed Vol. V Page
123	Separate Film Gate of Defendants' Machine PS16 (Physical)	823	....
124	Separate Flywheel of Defendants' Machine PS16 (Physical)	823	....
125	Separate Guide Roller of Defendants' Machines PS1 and PS16 (Physical)	823	....
126	File History and Contents of Engl, Massolle and Vogt United States Patent No. 1,590,185	824	....
127	Page 25 of "Variety" Issue of Tuesday, December 1, 1931, Containing "Notice to the Sound Film Industry," of Plaintiff, American Tri-Ergon Corp.	824	1633
128	Article Entitled "The Talking Film According to the Tri-Ergon Process," Hans Vogt—Zeitschrift des Vereines Deutscher Ingenieure, Vol. 70, No. 6, February 6, 1926, Pages 199-204, With Translation	824	1634
129	Article Entitled "The Sound Production Means of the Picture—Tonfilm," Hans Vogt—Filmtechnik, Vol. 5, April 27, 1929, Pages 202-205, With Translation	825	1657
130	Article by Hans Vogt in Film-Kurier of February 6, 1932, With Translation	825	1671
131	Article Entitled "Acoustic Film," Electrotechnische Zeitschrift, Vol. 43, December 29, 1922, Pages 1540-1541, With Translation	825	1675
132	Article Entitled "The Sounding Film," Arthur Furst, Berliner Tageblatt, No. 421, September 19, 1922, With Translation	825	1683
133	Sketch by Witness Waterman, Illustrating Ernemann Projector, Defendants' Exhibit No. 28	826	1689
134	Sketch by Witness Waterman, Illustrating Intermittent Movement of Ernemann Projector, Defendants' Exhibit No. 28	826	1690
135	Patents of Vogt, Massolle and Engl, Listed at Record, Pages 1602-1603	841	....

Ex. No.	Description	Offered Vol. II Page	Printed Vol. V Page
136	Binder of Patents Cited During Prosecution in German Patent Office of German Patents Nos. 387,058, 389,317, 389,318 and 389,319; and in Nullity Proceedings In Re Same Four German Patents; and Patents Cited in the Nullity Decisions With Respect to German Patent No. 417,916, With Translations	835	....
137	Title Page and Pages 43 and 45 of Brief of Party Vogt, et al., in U. S. Court of Customs and Patent Appeals in Interference No. 53,103, "DeForest, et al., v. Vogt, et al."	836	1692
138	Transcript of Trial Minutes and Briefs for Plaintiffs in American Tri-Ergon Corporation, et al., v. Robertson, Equity No. 47,904, in Supreme Court of District of Columbia	836	.....
139	Article Entitled "Sodium Amalgam for Photoelectric Experiments," by Elster and Geitel in "Annalen der Physik," New Series, Vol. XLI, No. 10, 1890, With Translation	836	1697
140	British Patent No. 3,701 of 1908 to Polyphos	837	1705
141-A, 141-B	Application as Originally Filed of DeForest Patent No. 1,466,701, and Copy of Patent as Issued September 4, 1923	837	....
142	Letter of Albert G. Davis to Ira J. Adams, Dated August 20, 1925	837	1709
143-A, 143-B	Application as Originally Filed of Nicholson Patent No. 1,470,696, October 16, 1923, and Copy of Patent as Issued	838	....
144	File History of the Bell & Tainter Patent No. 341,213 of May 4, 1886	839	....
145	File History of the Bell & Tainter Patent No. 341,214 of May 4, 1886	839	....
146-A, 146-B	Two Decisions of Supreme Court of Germany, Referred to by Witness Mueller	770	1712

INDEX TO DEFENDANTS' EXHIBITS—Continued.

Ex. No.	Description	Offered Vol. II Page	Printed Vol. V Page
147	File History of the Underhill Patent No. 995,390, Granted June 13, 1911	840	....
148	Sketch of the British Pederson Patent No. 115,942, Referred to by Witness Waterman—Marked Exhibit No. 72	840	1715
149	Tabulation Re Weight, Moment of Inertia, Revolutions Per Minute and Kinetic Energy of Flywheels of PS1 and PS16 Machines, Powers Projector and Ernemann Projector	841	1717
150	List of United States, Canadian and German Patents of Vogt, Massolle and Engl	842	1725
151	Affidavit of Carl W. Mittman of Smithsonian Institute, of June 26, 1933, With Respect to Photographs of Berliner Gramophone With Clark's Improvement	842	1737
152	Affidavit of Carl W. Mittman With Respect to Berliner Gramophone and Bell & Tainter Machines	843	1745
153	Affidavit of Carl W. Mittman, Containing Description of Record Strip of Bell & Tainter Machine	844	1747
154-A, 154-B	Records Introduced Under Capps Stipulation, Relating to Lightweight Records Made by Columbia Phonograph Co. in 1906 (Physical)	846	....
155	Edison Triumph Machine Identified by Witness Burt (Physical)	853	....
156	Copies of Sheets of Notebook Identified by Witness Engl	959	....
157	File History and Contents of Cawley Patent No. 1,710,677, Granted April 23, 1929	1025	....
158	File History and Contents of Cawley Patent No. 1,825,440	1025	....
159-A to 159-G, Inclusive	Photographs Taken by Defendants of Tri-Ergon Machine Alleged to Represent Figures 3, 4, 5 and 6 of Patent in Suit	1026	1757

DEFENDANTS' EXHIBIT NO. 1.

Simplex Projector Head, Model 100, of the Precision Machine Company, Inc.

(Physical Exhibit.)

DEFENDANTS' EXHIBIT NO. 2.

The Simplex DeLuxe Projector

TRADE MARK PAT'D

LICENSED BY THE MOTION PICTURE PATENTS COMPANY AND PROTECTED BY UNITED STATES AND FOREIGN PATENTS OWNED BY THE PRECISION MACHINE COMPANY, INC.

APPROVED FOR MOTOR OR HAND DRIVE BY UNDERWRITERS' LABORATORIES, INC. - NATIONAL BOARD OF FIRE UNDERWRITERS THE MASSACHUSETTS DISTRICT POLICE ELECTRICAL INSPECTION DEPARTMENTS OF NEW YORK, CHICAGO, WASHINGTON, D. C., PHILADELPHIA AND OTHER PRINCIPAL CITIES OF THE UNITED STATES AND CANADA

CATALOGUE 1914-15

DESTROY ALL PREVIOUS ISSUES

ACCURATE MACHINES FOR TAKING AND PROJECTING MOTION PICTURES

FOR DESCRIPTION OF SIMPLEX CAMERA, SEE PAGE 2

MADE AND GUARANTEED BY

THE PRECISION MACHINE CO. INC.
317 East 34th St. New York

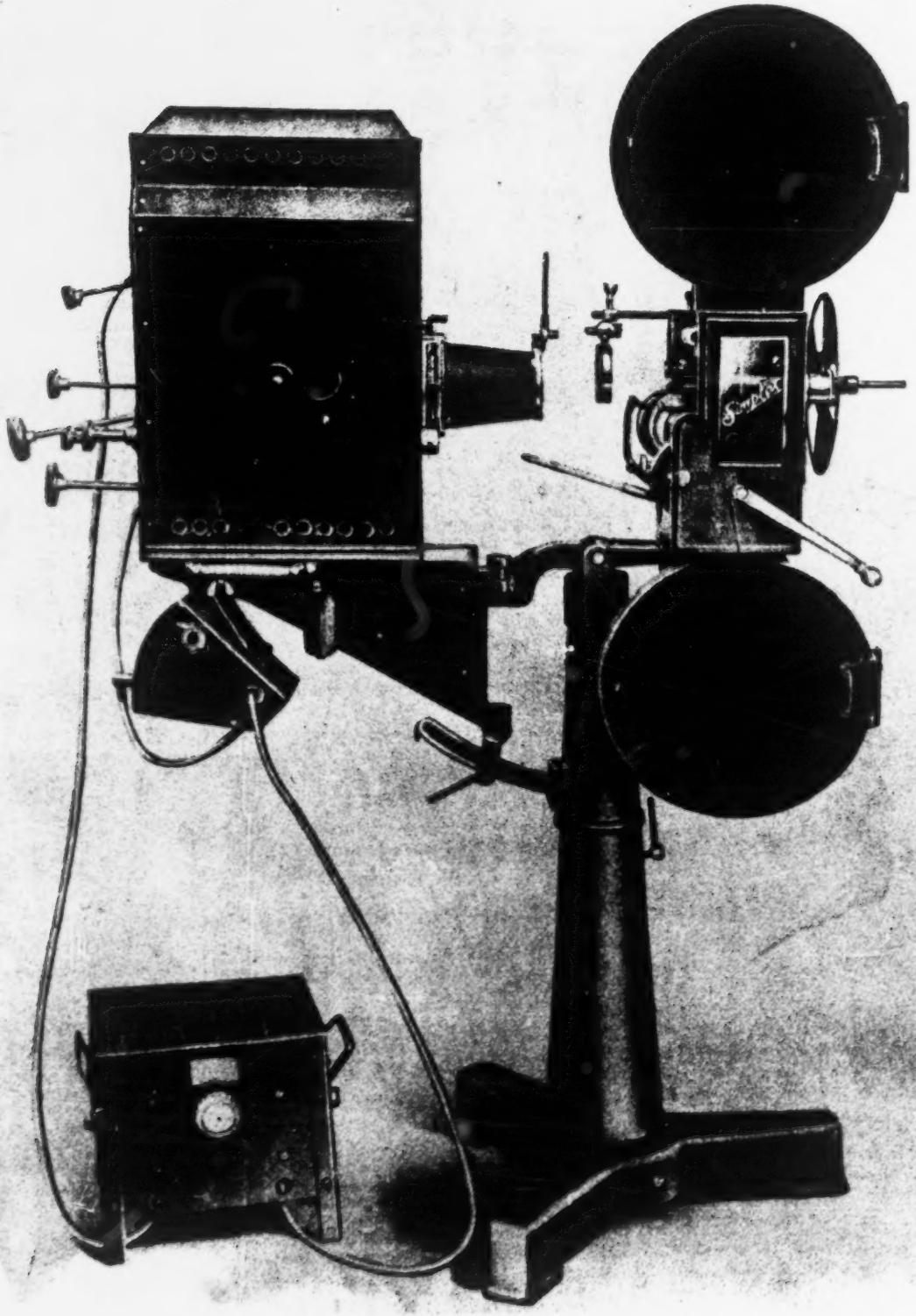

THE SIMPLEX PROJECTOR

Introduction

IN presenting this catalogue, we are directing attention to a projector which has successfully competed with all types of American and European machines and which, by sheer merit alone, has won the title "Peerless Projector."

In this catalogue we endeavor to present in a generously illustrated form and as completely as space permits, an exhaustive description of our well known Simplex Projector, camera and accessories.

The Simplex Projector was placed on the market in the Fall of 1911. Since then we have tripled our floor space and equipment and increased our rate of manufacture until now we have one of the largest factories in the world devoted exclusively to the manufacture of motion picture apparatus.

Although the Simplex Projector has been on the market only three years, the inventor who created it and dominates its construction today has been unceasingly engaged in this profession since its practical inception in 1897. Operators of many years' experience have wrought their knowledge and ability into the design of the Simplex Projector, so that we are amply justified in saying that its existence is not antedated by any machine on the market.

Our host of satisfied customers have made the Simplex machine popular, and to them we are deeply indebted. Our appreciation can best be expressed through our constant effort to improve the standard of our output.

It is interesting to note that over 75 per cent of our machines are purchased by experienced exhibitors who have used practically all other makes of machines and found that the Simplex accomplishes the high standard of projection which they have heretofore sought in vain.

We deem it a pleasure to answer any specific questions regarding our machine, or the art of projection, and solicit correspondence from those who are desirous of more knowledge on these subjects.

New York, N. Y

THE PRECISION MACHINE CO. INC.

Making of the Perfect Projector

FOR the benefit of those operators and exhibitors who are not familiar with the detailed construction of the Simplex Projector and for those who still doubt its pre-eminent points of superiority, we offer for perusal, several descriptive articles under the above heading.

We have precise machinery to turn out precision work. This, together with our thorough knowledge of what is required of a motion picture machine, has enabled us to present to the patrons of motion picture houses a quality of projection heretofore unknown.

The degree of success to be attained by the theatrical proprietor depends, to a large extent, upon the manner in which his individual enterprise is conducted. It should be borne in mind that the first requisite for conducting a first-class photoplay theater is the projecting machine, for if the projection is not perfect, success cannot be hoped for. It is of vital importance, in order that the projector may work at its highest efficiency, that it be properly cared for by a competent operator who takes pride in his work.

We believe it will benefit every exhibitor and operator, regardless of whether he be about to buy a new machine, to carefully study the making of the Simplex Projector.

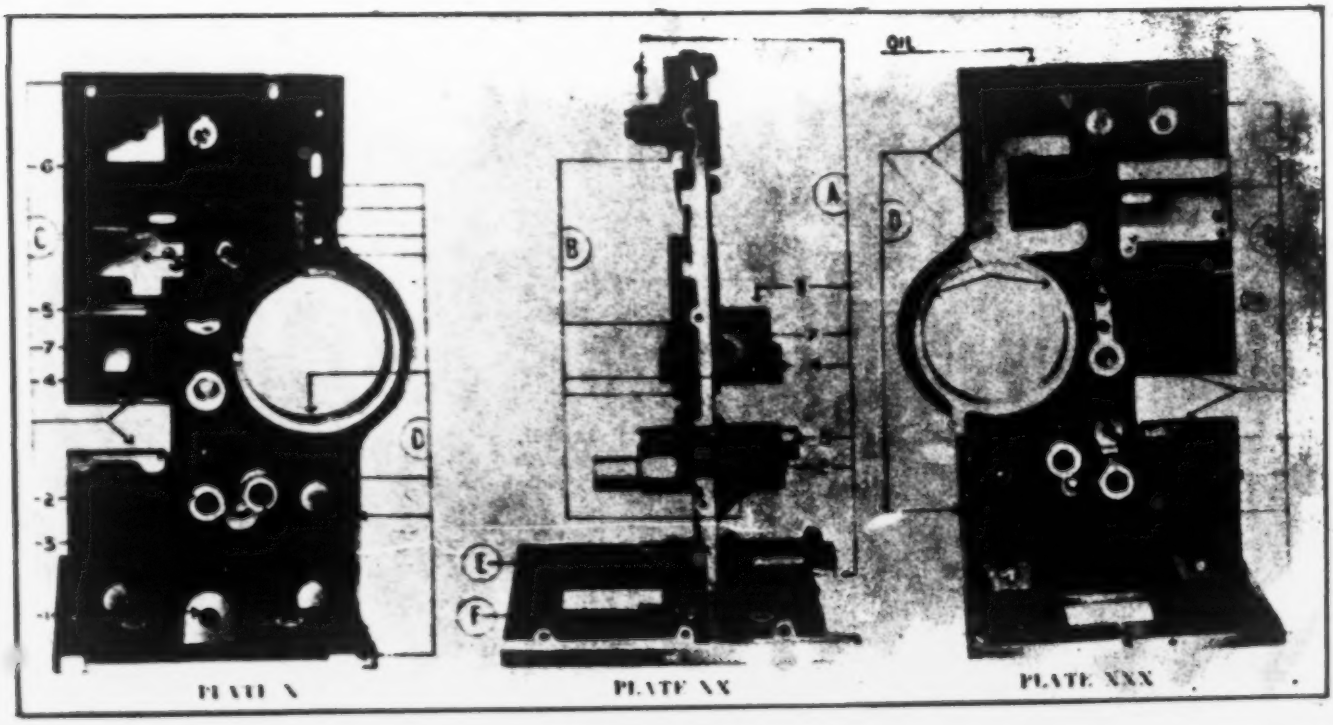

PLATE X PLATE XX PLATE XXX

These illustrations, X—XX—XXX, represent the *center frame* upon which depends the correct working of the entire mechanism. It is made of close grain grey cast iron, the patterns being designed to reinforce all parts liable to strain in machining or use. It is then japanned before machining.

Cast iron, as a bearing metal, is recognized the world over as being par excellence. It is semi-porous, thereby retaining a quantity of oil, and causing a glazed surface to be formed by the revolving shafts of tool steel.

The reproductions above show at a glance the amount of machine work such as milling and profiling, illustrated by letter "D," drilling and reaming, "C"—which is necessary in its manufacture.

Each operation must be perfect in itself or the finished piece will be rejected by the chief inspector, who makes a final and rigid inspection.

The bearings No. 1 motor drive stud, No. 2 main drive shaft, No. 3 lower feed sprocket shaft, No. 4 intermediate shaft, No. 5 vertical shaft, No. 6 top feed sprocket shaft, No. 7 framing slide cam arm, are of generous length, as shown by "A" large in diameter "C" and are drilled and reamed to exact size. The large bearing as shown on plates X and XXX is for the framing cam, into which fits the intermittent casing.

Making of the Perfect Projector

Shafts

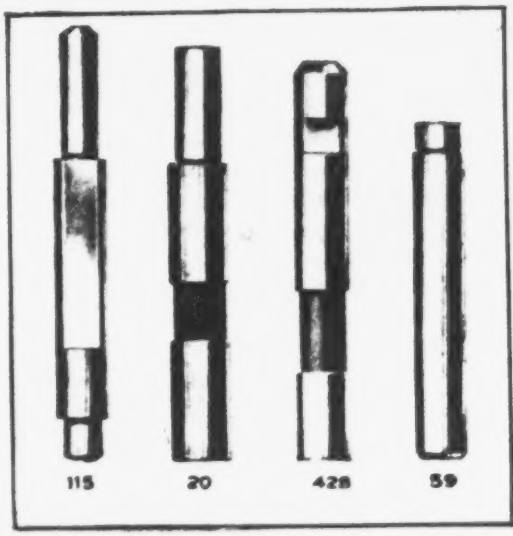

IN explaining the making of the shafts for use on the Simplex, note they are exceptionally large in diameter, and consequently much heavier than those used on most projecting machines.

All are made of tool steel; and after turning, they are carefully ground to within limits of 1-5000 inch, which insures great accuracy. Where high speed duty is required, they are hardened to minimize wear.

These shafts of tool steel revolve in bearings of cast iron, unusually long, in the center frame. Cast iron retains a certain quantity of oil, thereby reducing friction to a minimum and eliminating the possibility of the shafts getting out of alignment.

Shutter Shaft D 133½, the longest on the projector, is 8⅜" long by ⅜" in diameter. It is supported by two bearings, each 1" long. The only weight on this shaft is an aluminum shutter which is perfectly balanced and weighs 6 ozs.

11, main driving shaft, is one of the largest in diameter used on any projecting machine; it is ½" in diameter and 7 1/16" long. On this shaft fit two clutches to hold the main driving gear and the driving crank. Unlike other projectors, the take-up is driven from this shaft.

23, the vertical shaft is one of the smallest sizes (6" long, 1/4" diameter), and is supported by two bearings; its purpose is to support the bevel gears for driving the shutter, the upper feed sprocket, and holding the centrifugal governor, which operates the fire shutter.

37, the lower feed sprocket shaft, is ½" in diameter and exceptionally long (5 3/16").

A glance at the cut will convince the most skeptical how much the Simplex differs from any other projector, as shaft 37 is several times larger than the corresponding shaft on any other machine. 30 is one of the smaller (3⅝" long, ¼" diameter), and is the top feed sprocket shaft; it is made of tool steel, pack hardened.

115 is the spiral driving gear shaft of the shutter bracket. The sides of this shaft are ground flat to permit the fitting of the hardened spiral gear which operates the shutter when framing the picture. (Length 3⅝", diameter 1/16".)

20 is the intermediate gear shaft and is ½" in diameter and 3⅝" long. The previous size of this shaft was 1/16" diameter and 3" length. This is only one instance in which we have increased Simplex cost instead of cheapening it. This shaft is pack hardened.

428, motor drive pinion stud, is 1/16" in diameter and 3½" long, and is held to the center frame by a boss on the casting, 1¼" long. This shaft is hardened and ground, and its duty is to support the motor drive pinion, which meshes into the main driving gear.

59 is the flywheel shaft which carries spiral cut gear No. 61 and the flywheel on the intermittent box. (Length 3", diameter 1/4".)

Shafts Nos. 37, 115, 20 and 59 are sold only with the gears.

The starwheel shaft and star is cut from one solid piece; it is 3" long, and 11" in diameter. Starwheel cam and shaft are likewise cut from one piece, and is 2¼" long by ⅛" in diameter.

The slideover arm, not illustrated, which actuates the gears on the shutter bracket, is 2¼" long and 1/16" in diameter.

All of the shafts are grooved to permit oiling of the entire length, which is so essential. At every step in the making and grinding of these shafts, they are carefully inspected by experts and measured with micrometers, thus insuring to operators and exhibitors, interchangeability of parts.

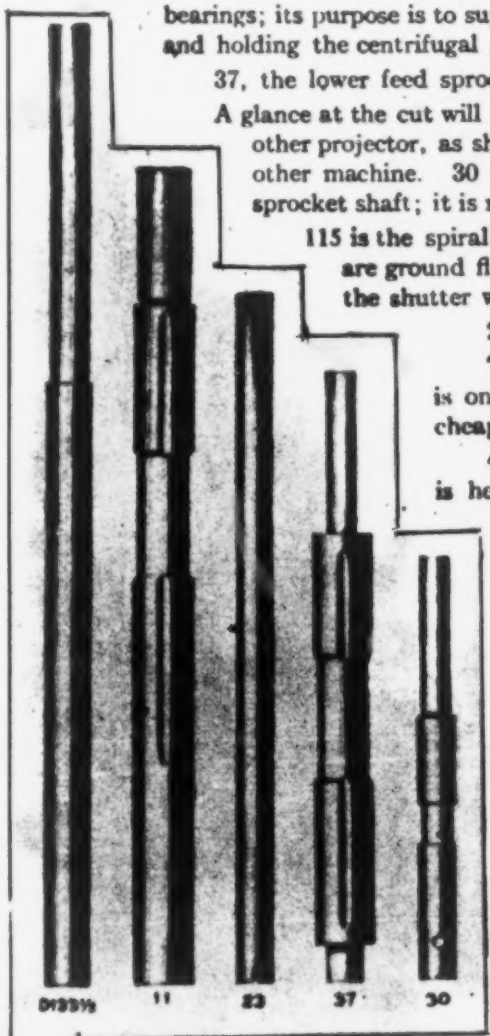

Making of the Perfect Projector

Gears

AN important factor in the successful operation of a motion picture machine, and one which has been the subject of much criticism in recent years, is the gears. In designing the Simplex projector we have constructed a machine with the least number of gears possible, and have placed them in a center line position. The gears and pinions on our machine are generated from cast iron, tool steel, and phosphor bronze blanks which, after turning, are carefully ground and tested for accuracy with micrometers up to 1-5000 of an inch. The machines we use for generating our gears are recognized in the mechanical engineering world as the most accurate of their kind.

All the gears on the Simplex projector (with the exception of the lower feed sprocket, gear 38, and the internal of the main driving gear) are spiral cut to diminish the noise and obviate the back lash; and, after being assembled on the projector, they are ground into a perfect mesh with glass, stone and oil. This, with the pitch and the number of teeth used, permits an even transmission of power with the least possible friction and insures longer wearing qualities.

Main driving gear 6 or 600½ are fair samples of our workmanship; both internal and external gears are cut from one solid blank of cast iron. Lower feed sprocket gear 38 meshes into main driving gear.

600½ carries a sprocket on the outside face for driving the chain take-up for the 2000-foot reels instead of carrying a pulley as used for the regular belt drive.

Intermediate driving gear 604 consists of a large gear 19, inside bevel gear 19½, steel pinion 21 and a hardened shaft 20, all of which are set into a special fixture on an arbor press and forced together, thus forming practically one solid gear.

Motor drive pinion 750 meshes into main driving gear 6, and, as you will note, is geared down to a ratio of 5 to 1. On account of the low gearing a minimum amount of power is required to drive the mechanism. The pulley carries two grooves for belt connection with an idler pulley on the pedestal.

Complete shutter gear bracket 634 comprises gears 117 and 120, driving bevel gear and shaft 636 and shutter shaft 133½. Gear 117 is actuated on the shutter gear bracket by a slide, which is supported by a guide.

Bevel gears 25 and 31 drive the upper feed sprocket shaft. Bevel gears 23½ and 24 are attached to the vertical shaft 23, and their duty is to transmit power from intermediate gear 604 to vertical shaft and shutter driving gears.

The automatic fire shutter, as used on the Simplex projector, is actuated by a centrifugal governor, illustrated by 84, 87 and 88. This type of governor is entirely free from friction, and places no tension upon the operation of the machine. In fact, it assists to balance the upper train of gears. The governor is supported to shaft 23 by top link holder 88, and two steel links which are securely fastened to the governor weights by link screws. 84, governor lift, which trips the lever of the automatic fire shutter when the machine is operating, is secured to the governor by two links.

This type of centrifugal governor is extremely simple, and operates without springs, rollers, etc. Mechanical Engineers attest to its reliability.

Complete Shutter Gear Bracket 634

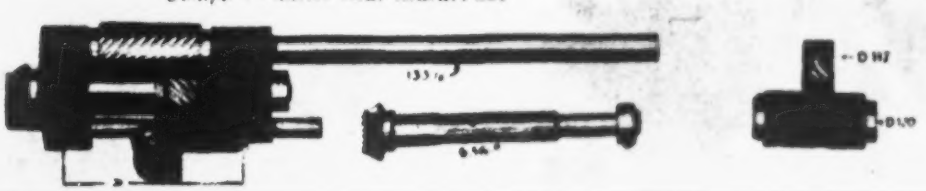

Making of the Perfect Projector

Intermittent Movement

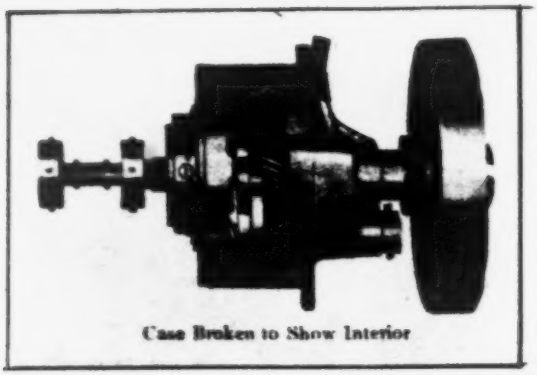

Case Broken to Show Interior

THE intermittent movement, the most important part of a projection machine mechanism, is of the well known Geneva type, consisting of a star and cam, operating in a box filled with oil, which prevents friction, reduces wear and eliminates noise. As long as a sufficient quantity of oil is present in the box, the adjustment practically requires no attention and wear is eliminated; see page 24.

The advantageous points of the Simplex intermittent movement may be summed up in extreme accuracy, design of the highest efficiency, noiseless operation, long life, accessibility and simplicity.

Oiling of the star, cam and flywheel, shaft and gears, is accomplished through oil tubes leading to the bearings. Also the cam operates on a system commonly termed the splash feed, which keeps a stream of oil playing on the gears and the Geneva movement.

The intermittent case is made in two pieces (Box 49 and screw cover 50) of close grain grey cast iron, in which vanadium is mixed.

The intermittent movement is perfectly balanced, as may be readily ascertained by a glance at illustrations.

The framing of the film is accomplished by advancing or retarding the intermittent movement by a clever, reliable framing device for turning the intermittent box forward or backward; the revolving shutter by a simple cam system, synchronizing automatically. By this construction the intermittent sprocket is always in line with the film and the feed sprockets, both vertically and horizontally, and revolves in its own center; as there is no moving carriage, the possibility of losing the lower loop is eliminated.

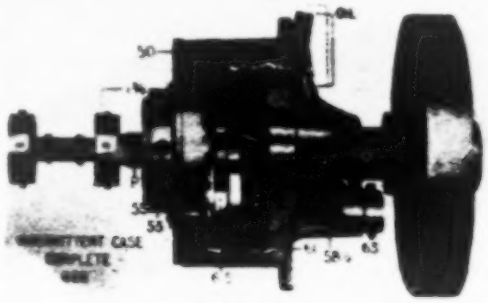

The gears 58½, 61, illustrated on Plate B1, are of tool steel, spiral cut, pack hardened and ground into a perfect mesh, so as to roll together without the slightest friction. They are attached to the flywheel and cam shafts by a jig which sets them accurately in place.

Bearing 54 of the intermittent sprocket shaft 67 is of machine steel, into which is set a pack hardened, ground and lapped steel bushing 1⅛" long and ⅞" in diameter, as illustrated on Plates B1 and B2. By loosening two set screws 55 Plate B1, visible on the cover of the oil box, and using wrench 614 Plate B2 over the hexagon head of the eccentric bushing, the relative position of the star to the cam can be adjusted on the Simplex with far greater ease and precision than on ordinary projecting machines, because of the one bearing.

Starwheel and shaft 67, cam and shaft 615, are made from a special drop forging of tool steel, and are cut on specially designed machines, requiring the most careful workmanship and skill to produce accurately to within 1-10000" limit.

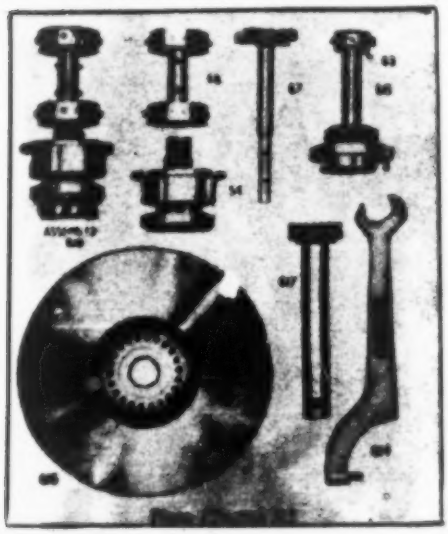

The starwheel shaft is small in diameter, which reduces the weight to a minimum, so that when turned and stopped 16,000 times during the projection of a 1000-foot reel of film, the back lash, which causes vibration, is eliminated. The lightness of this shaft and the intermittent sprocket is of obvious advantage and accomplishes steadiness due to the slight momentum developed in it on each impulse of the cam.

The teeth of intermittent sprocket 68, feed sprocket 40, illustrated, are cut involute, the most perfect form for film contact—a feature vitally important in obtaining the rock-steady perfect projection, for which the Simplex machine is famed.

The entire intermittent movement, as illustrated, can be removed from the mechanism and replaced in two minutes by loosening four screws. This enables the exhibitor to obtain an extra framing device or practically the equivalent of an extra mechanism for only $30.

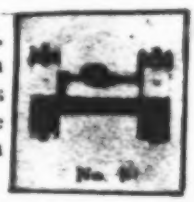

Making of the Perfect Projector

Film Trap

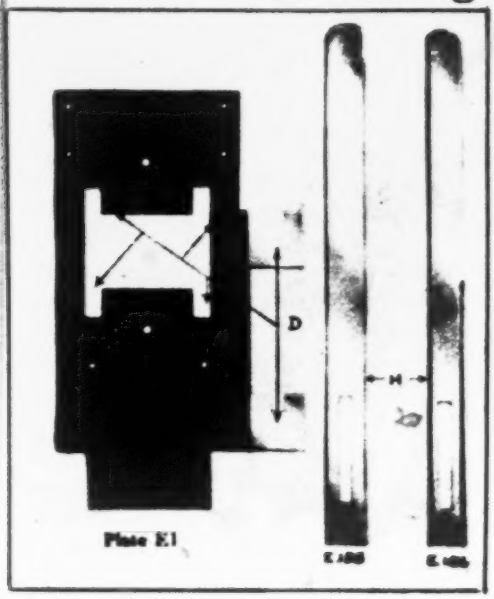

ORIGINALITY and efficiency of the design of the Simplex Film Trap have been the subject of much praise from experienced operators.

Two most important features are: First, the fact that the tension is on the polished or celluloid side of the film, thus insuring an even pressure; second, that a slight upward lift removes the gate quickly, permitting the easy cleaning of any emulsion or foreign matter from shoes 155 and 156.

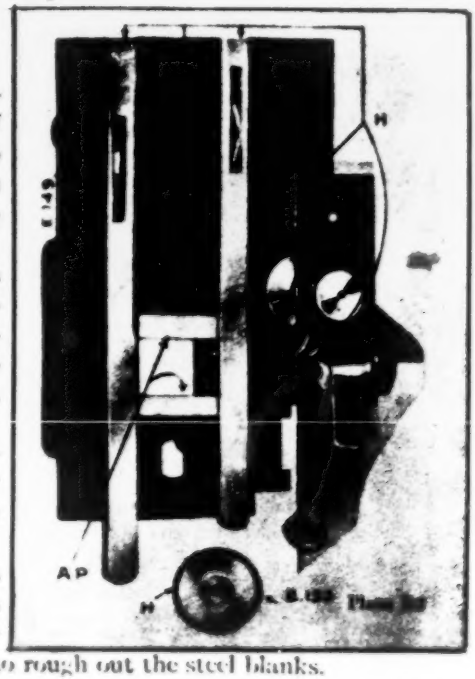

The Gate (illustration E1) is made of machine steel, the lugs securing the Gate to the holder being electrically welded, forming one solid piece. "D" shows the milling machine work, painstakingly done to rough out the steel blanks.

Film Trap Shoes (155, 156, Plates E1, E3) are of steel, pack hardened, ground on both sides and beveled ("H," Plate E1) to permit sliding into the dove tail slots (E2) with ease and exactness. There can be no warping of the film trap shoes, as they are securely fastened to the aperture casting. These features, and the unusual care and precision with which each part is made and assembled, show you their remarkable durability, lasting qualities and efficiency.

The lateral guide rollers (153, E2, E4) are of steel, hardened and ground ("H," Plate E2), thereby insuring perfect accuracy and exceptional wearing quality, resulting in the absolutely straight guiding of the film into the film trap. The film cannot pass the guide rollers unless it is set between the two. If it should not be it automatically rights itself. The distance between the rollers can be adjusted at will by set collar (153½, E).

The Gate (641, Plate E3) is opened for threading by a light inward pressure on thimble (167, Plate E4) and is closed by releasing film trap door trip lever (645, Plate E3). Thus in threading there are only two operations: one to open, one to close gate, as compared with four operations necessary on other projectors. The intermittent sprocket tension shoe (646) is made of ten pieces of tool steel, each hardened, ground, polished, and securely riveted together to form one solid piece. The two inside shoes are offset and do not touch the film.

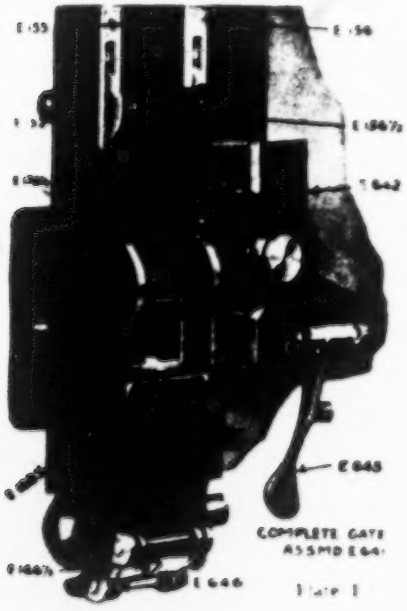

To safeguard against accidents, the cooling plate (648A, E4) is made of two pieces of sheet steel, separated ¼ inch, which arrests the heat by radiation and protects the fire shutter and aperture side of the film trap. The air space between the automatic fire shutter and film is ½". This prevents the firing of the film when the spot is allowed to strike the shutter.

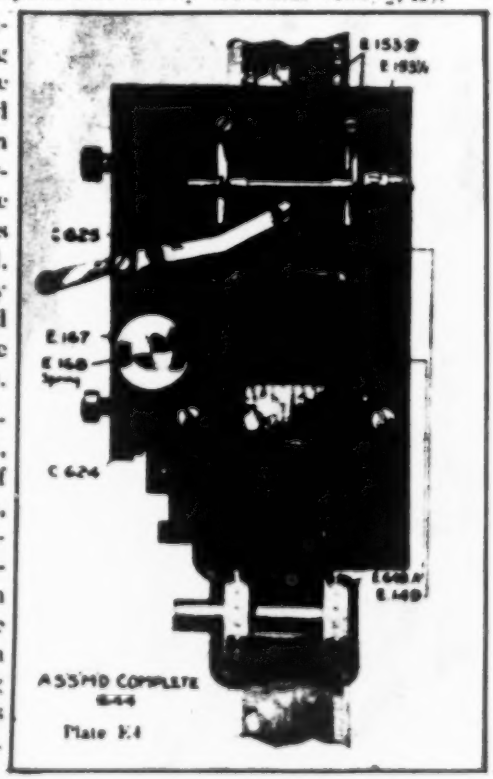

Making of the Perfect Projector

Lens Holders

THE superiority of the arrangement of the lens holders and focusing devices on the Simplex projector are such that the lenses are always held absolutely parallel with the aperture plate.

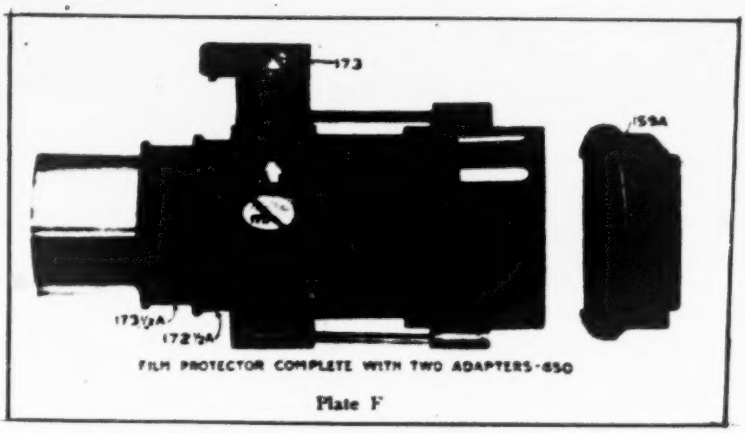

Plate F

The film protector and projecting lens holder 650 are made of a suitable metal, and are securely held in the mechanism by set screw 173. The ordinary projection lens is fitted into the adaptor 173½, which is securely clamped and held parallel with the aperture plate by screw 175. When a No. 1 Gundlach or Simplex De Luxe lens is used, adaptor 173½ is removed, and the lens tube inserted into adaptor 172½ as illustrated on Plate F.

When one-half size lens is used, as shown on Plate F3, the rear end cell must be threaded so that the connectors can be secured to the lens to hold it in the projection lens holder.

The connector 175½ is for 5½" one-half size lens, and is fitted into projecting lens holder by removing both adaptors and inserting small end. The extension collars 1, 2, 3, 4 and 5 are for lenses of longer focus, being used to extend the lens further away from the film.

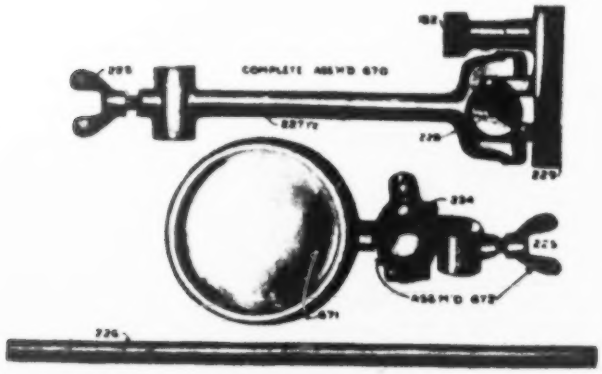
Plate F2

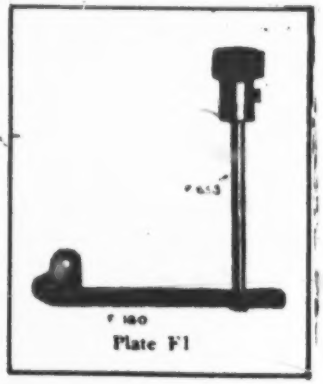
Plate F1

A novel arrangement for focusing, located on the left hand side of the machine, convenient for the operator, is shown on Plate F1. The rack 180 is fastened to the lens holder and film protector 650 by a set screw which travels in a milled groove on the center frame. Figure 653, focusing pinion and shaft, are cut from one piece of tool steel, thereby obviating the possibility of the gear becoming loose upon the shaft.

The focusing pinion adjust screw 182 has a knurled head so that it can easily be gripped between the thumb and index finger for exact focusing. This focusing arrangement is an exclusive feature, to be found only on the Simplex machine.

The stereo. lens holder, as illustrated on Plate F2, is made of coarse grained cast iron, carefully machined, all bearings drilled and reamed. The single glass stereo. lens is furnished with the Simplex projector, and is clamped into the holder. Adjustments are simple and their accessibility is almost self-explanatory, as the ball and socket joint, 672, and wing screws, 225 and 228, permit a lateral or horizontal movement of any part of the lens or holder.

The method of exact focusing is similar to that of the projection lens, and is accomplished by turning the knurled screw, 182, which is to be found next to the projection lens focusing knob.

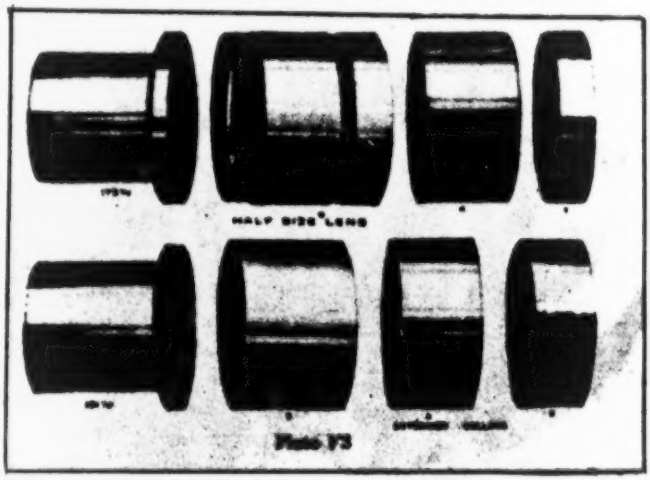
Plate F3

Write for prices of Simplex De Luxe Lenses.

176

Making of the Perfect Projector

Revolving Shutter

THE revolving shutter is an important part of a projection machine, and is deserving of the most careful consideration.

We have given the shutter question a great deal of thought, and from time to time have experimented, with various types, which have been placed in every conceivable position, from between the condensers and aperture plate, to its present position in front of the lens, as shown on plate H.

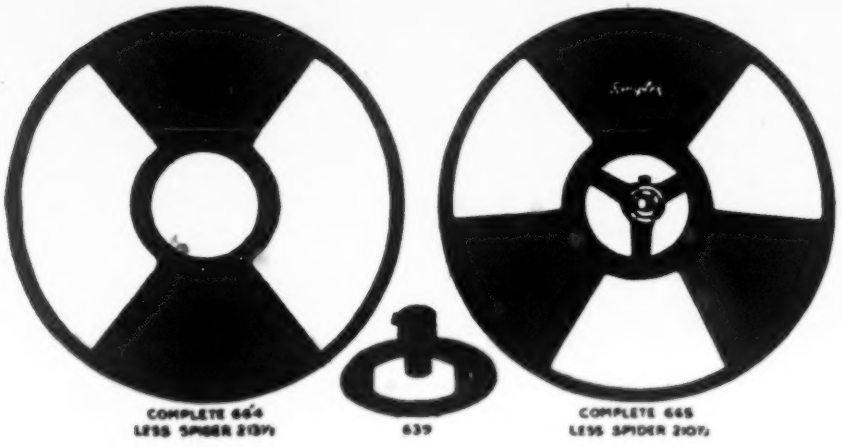

The shutter, when placed in this position, eliminates the sharp contrast between light and darkness, and has a tendency to tone the periods of exposure, as against the time when there is no picture on the screen—in other words, dark periods.

Both the 2 and 3-wing shutters, as furnished with Simplex projectors, permit a maximum amount of light to reach the screen with the least perceptible flicker when the machine is operated at the normal speed of 60 feet of film per minute.

The 3-wing shutter 665, illustrated above, is intended for use with direct current. It consists of one cut-off blade, the function of which is to obstruct the light while the film is in motion before the aperture, and two flicker blades or interrupters, which equalize the light periods while the picture is being exposed upon the screen. This type of shutter permits 50 per cent of the light to reach the screen.

The 2-wing shutter 664, illustrated above, is primarily designed for use with alternating current of 60 cycles or less, and it does not intercept the light periods in step with the alternations of the arc.

This type of shutter can also be used on direct current; but, having only one interrupter, it will not eliminate the flicker as well as the 3-wing. 65 per cent of the light is permitted to reach the curtain with the 2-wing type.

Should a 3-wing shutter be used on alternating current and revolved a little slower or a little faster than normal, the blades are apt to get into synchronism with the alternations of the arc and cause a wavy effect in the light similar to a bad flicker.

Both shutters 664 and 665 are 9¾" in diameter, and can be used with lenses of any commercial diameter or focus.

The spider casting 639 is of a special design, made of aluminum, and holds the shutters securely, by means of ten machine screws.

It is important that the shutter be balanced and light in weight to lessen strain on shutter shaft, and avoid vibration of the machine; this is accomplished by using aluminum in the manufacture, the complete shutter and spider weighing only 6 ounces.

An exclusive feature of paramount importance to every operator and exhibitor is the fact that the shutter can be easily and quickly set while the machine is in motion, by turning the knurled knob which is located alongside of the framing handle, illustrated on Plate H; thus eliminating travel ghosts or white streaks.

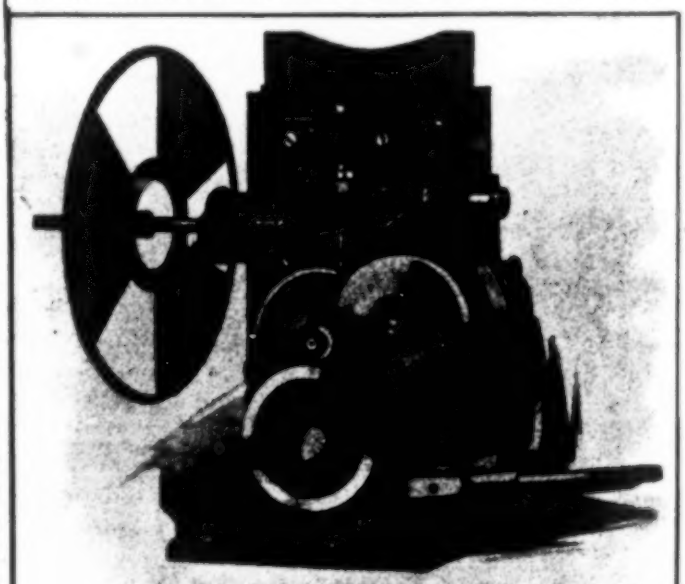

Plate H

960

Making of the Perfect Projector

Take-Up Device

FOR a projection machine to work properly, it is important that the take-up device be a simple, rigid design, that can be relied upon to rewind the film into the lower reel evenly, with a minimum tension.

Unlike other projectors, the take-up device used on the Simplex projector is not driven from the lower feed sprocket shaft, but from the main driving gear, thus balancing the entire mechanism and equalizing the strain on the main driving shaft. The well-known friction-disc type, belt driven, as shown on Plate K, is regularly supplied, details of which are illustrated on Plate K1.

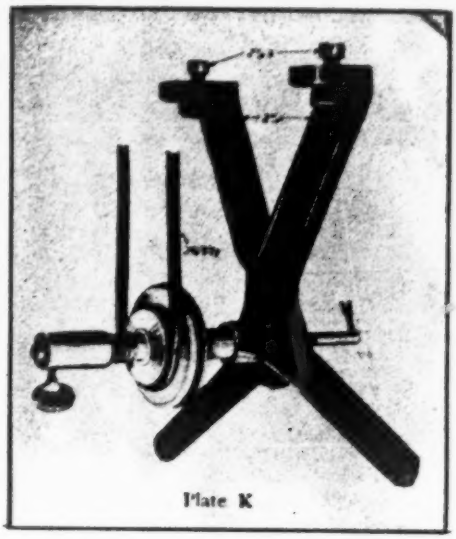

Plate K

Part 260, the driving side of the disc, is directly connected to the take-up shaft 684. Leather friction washer 262 is 3" in diameter by ¼" thick. It operates between friction disc 260 and pulley 260½, and equalizes the speed of the take-up reel. The take-up driving pulley 260½, driven by belt 263½, is forced to bear against leather washer 262 by spring 264, which is kept in place by a thimble 265 and set screw 266.

Take-up shaft 684 is made of cold-rolled steel and is 9⅛" long by ⅜" diameter; and, after turning, is carefully ground to insure accuracy. The end that carries the reel is reduced to ⅜" to accommodate the ordinary reel, this being the prevailing diameter of the bearings of reels in this country. This shaft is supported by a bearing on the spider casting 251, which is 2⅝" long, as shown on Plates K and K2.

Another advantageous point of the Simplex projector, and a time saver, are the reel clips shown on Plate K1. Their duty is to hold the reel onto the take-up shaft, so that the pin on 689 engages the reel hub.

The take-up, which is primarily designed to reel up 1,000 ft. of film, cannot satisfactorily take up 2,000 or 2,500 feet. We have designed a take-up device to meet this situation, as shown on plate K2.

It is similar to the belt-drive, with the exception of a steel sprocket 691, Plate K2, 4½" in diameter, which, combined with the use of the special Bell & Howell standard reels, with 5" hubs, as illustrated on Plate K2, equalizes to a minimum the strain which would otherwise exist on the first 250 feet when re-winding, and the last 250 feet on the upper reel. This reel, when used in connection with the take-up driving sprocket, permits a slower speed than with the ordinary reel.

In order to obviate the chance of straining the belt connector we use a steel chain, which has proved far superior to a belt for driving reels of this diameter. It is ⅛" wide and is guaranteed by the maker, Coventry, to withstand a breaking strain of 300 lbs. per inch. The blocks are hardened to eliminate wear and stretch. The tension of the chain on sprocket 691 is adjusted by take up chain adjust bracket 690, shown on Plate K2.

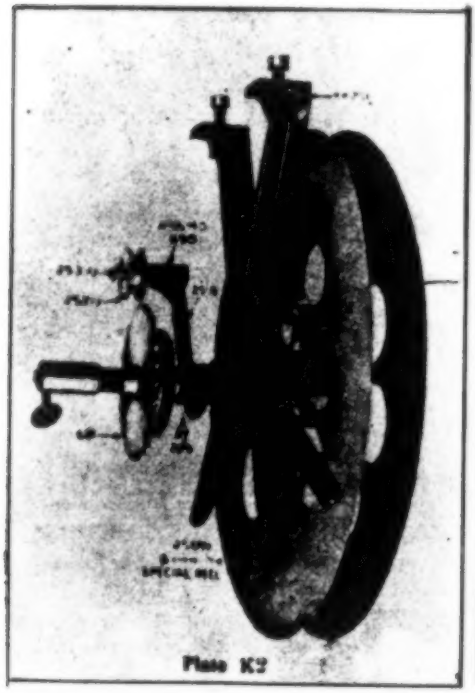

Plate K2

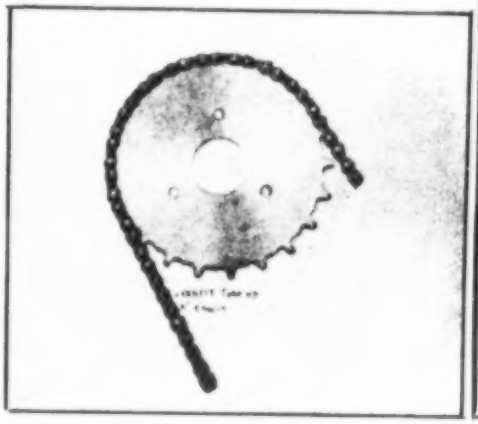

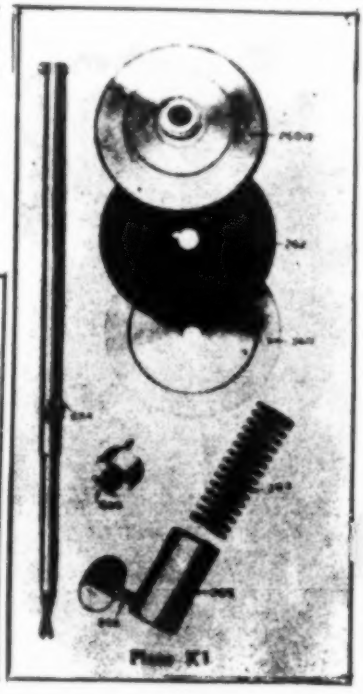

Plate K1

Making of the Perfect Projector

Simplicity of Threading

Plate 1

WITH the exception of the machine itself, nothing could illustrate more graphically the ease with which the film can be threaded in the mechanism, than the following four illustrations.

Simplicity of threading was borne in mind when this machine was designed and has been one of the primary reasons for the success of its sale to modern theatres. Consistent with this idea, a glance at the illustrations on page 19 clearly demonstrates that there is nothing to hinder the operator in making a quick change from one reel to another. It has often been said by expert operators that they can remove a reel of film from a Simplex machine and re-thread with another in quicker time than they can on any other projector. You will observe that the film can be removed from the machine without resplicing, as the valves are slotted.

Plate 2

Figure 1 illustrates the method of inserting the film through the magazine valve and on to the top feed sprocket previous to forming the loop.

Figure 2 illustrates the threading of the film through the film trap by forming the upper loop with the first finger of the left hand and gripping the film below the intermittent sprocket with the thumb and second finger of the right hand and closing the film trap gate by tripping film trap trip lever 645 with the index finger.

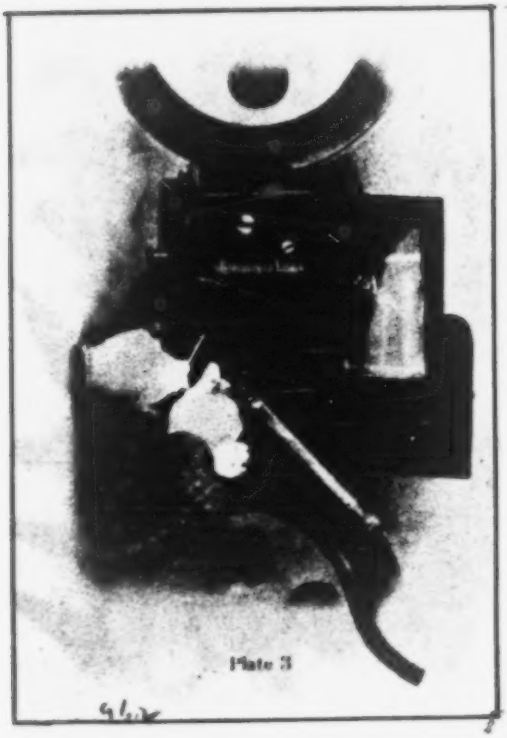

Plate 3

Figure 3 illustrates the method of forming the lower loop, threading the film over the lower feed sprocket and closing the lower feed sprocket roll arm by a downward pressure with the thumb of the right hand.

The film is then inserted through the fire valve by means of the slot in the base of the mechanism and is then fastened on to the lower reel so as to rewind to the right.

Figure 4 shows the machine completely threaded from the top reel to the feed sprocket through the film trap and on to the lower feed sprocket and the take-up reel.

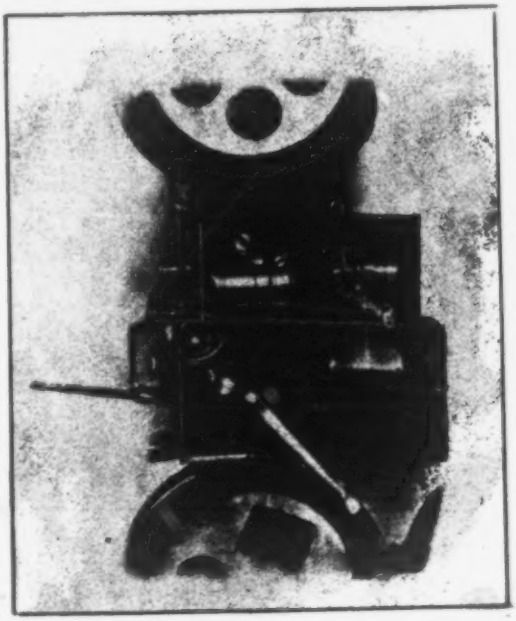

Plate 4

Making of the Perfect Projector

Completed Mechanism

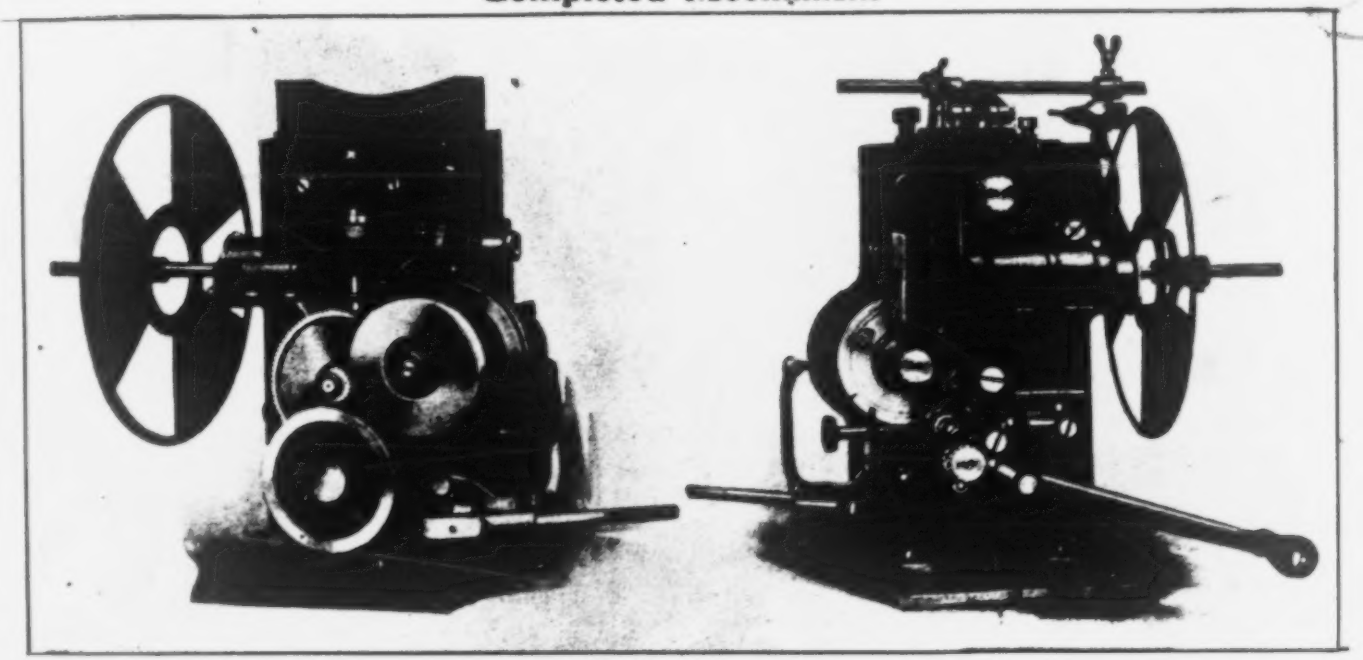

Plate A. Left Side. Dust-proof Covers Removed

Plate AA. Right Side. Fire-proof Covers Removed

IT is not necessary to elaborate on the construction of the mechanism, as the various parts and their making have been fully explained in previous pages. They are illustrated here, completely assembled.

Plate AA shows the right side, with film covers and the upper magazine fire-proof valve, removed from the top. This valve consists of one large steel roller and two smaller ones which are set at an angle of 45 degrees. They bear against the film top and bottom, and should the film accidentally take fire from any cause whatsoever, they prevent any flame from entering the top magazine. Another advantageous feature is that this magazine cannot be placed out of alignment with the top sprocket, as it is securely held to the main casting by two set screws.

Plate AAA is a perspective of the completely enclosed mechanism showing the right and front sides only. It is absolutely fire and dust-proof. Should the take-up refuse to work or the film break within the mechanism, it cannot escape from the enclosure or come in contact with the light. Into the door on the right side is set a large plate glass which permits the operator to closely watch the operation of the film.

The chief claims for superiority of the Simplex projector consist in originality of design, extreme accuracy, durability of construction, absolute fire-proofness, simplicity of operation, brilliancy and steadiness of projection and silent operation.

It is the machine that is used in 90 per cent of the photoplay manufacturers' studios to test their films and project them for prospective purchasers.

Complete mechanism with stereo. attachment, less lenses and magazines, price complete (Code Equicmec) $200.00

Net weight, 47 lbs. Packed, 67 lbs.

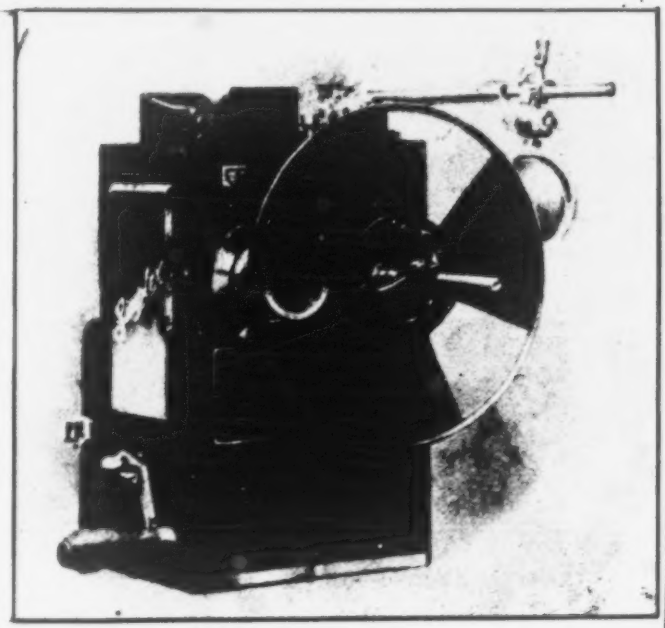

Plate AAA

Simplex Motors and Attachments

OVER 65 per cent of the motion picture machines sold today are equipped with motor drive.

The general construction and design of the Simplex mechanism make it especially suited for use with motor drive on account of its fireproof features.

At the first glance, inspectors and fire chiefs instantly recognize that "safety first" is one of the advantageous points of the Simplex projector.

Our motors and attachments are approved by Underwriters' Laboratories, Inc., National Board of Fire Underwriters, the Massachusetts District Police, Electrical Inspection Departments of New York, Chicago, Washington, D. C., Philadelphia and other principal cities of the United States and Canada.

Pedestals of Simplex projectors are designed for the easy attachment of the cast iron motor shelf 430, which fits into a milled slot on the left hand side, and is securely held by two bolts. The motors are attached to the pedestal by the wing screws, as illustrated.

Pulley 751 is an idler which fits over the stud on the center of the pedestal and is driven by the motor belt, which is connected to the large pulley. Motor drive pinion stud 428 is of steel, ½" in diameter, pack hardened and ground. It is securely held to the lower casting of the mechanism by set screws.

Motor drive pinion 750 meshes into the main driving gear of the mechanism and operates on stud 428.

The control of the speed is regulated by the resistance box, which gives eleven graduations, which, together with the two separate size pulleys, 750 and 751, permits a range of speed of from 10 to 24 pictures per second.

The alternating current motors furnished with the motor drive equipment are of a specially designed type, controlled by a speed regulator such as used on direct current; or, at the option of the purchaser, a repulsion type, the speed of which is controlled by shifting the brushes on the commutator.

On account of the low gearing and direct drive, the elimination of all frictional discs, springs, etc., vibration and noise are done away with.

The contacts of the speed regulator and motor binding posts are amply protected by a cast iron cover 437, on which is mounted a two-pole snap switch, which cuts off the line current.

The motors used in connection with the Simplex are of unusual efficiency, and the horse power rating is much in excess of the actual power required to operate the machine.

They are guaranteed by their respective makers and are encased, rendering them noiseless in operation and protecting them from dust, etc. The usual Simplex guarantee is behind every motor drive equipment.

A special spring switch attachment is necessary for use of the motor drive in Massachusetts. Spring hinges on magazines and lamp house doors are required in the city of Washington, and in addition for Chicago a special lamp house is necessary.

Weight, attachment only, net 13 lbs., packed 20 lbs. Weight, motor and speed control, net 34 lbs., packed 50 lbs.

Complete attachment, 110 or 220 volts 25 or 60 cycle A. C. . . . . $55.00 list
Massachusetts equipment, special 70.00 list

Including a direct or alternating current motor for either 110 or 220 volts (A. C. motors either 25 40 or 60 cycles).

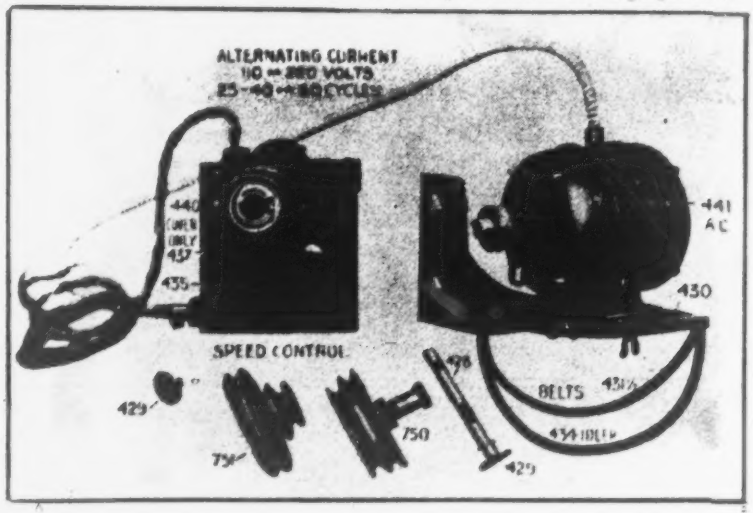

964

DEFENDANTS' EXHIBIT NO. 3.

Section Model of Simplex Projector.

(Physical Exhibit.)

DEFENDANTS' EXHIBIT NO. 4.

Stock [redacted] REGISTER

Simplex Projectors (Domestic) 1911-2

L. Exh. 4

No.	NAME	QUAN	[redacted]	Licence No.	Date Rec'd	Date Imp'd	Amount
100	Model						
101	M. Steinberg Apt. Loan		133 West 23rd St. N.Y.C.				
102	~~M. Steinberg Apt. Loan~~		Loan				
103	Monopol Film Co		Providence R.I.	3		8/25/11	
104	Emergency Repair Co.		210 E. 14th St (Consgt).				
105	Simplex Agency		23 East 14th St (Exhibit)				
106	Crystal Film Co			8		8/1/11	
107	~~Simplex Agency~~ Finney Playing Co.		~~23 East 14th St (Exhibit)~~ Finney Bldg. Cal.	7	8/31	8/31	
108	Monopol Film Co		Garrick Theatre St Louis Mo.	8		8/23/11	
109	Rex M.P. Mfg. Co.		579-11th Ave N.Y.C.			7/5/11	
110	W.H. Swanson Film Co.		Denver Col	10		8/30/11	
111	H. Fitchenberg		New Orleans La	11		8/31/11	
112	Manhattan Slide Co.		W.S. Kolle, Brooklyn	12		7/25/11	
113	Monopol Film Co		Princess, Chicago Ill	13		8/23/11	
114	Jake Wells		Bijou, Nashville Tenn.	14		8/25/11	
115	Monopol Film Co		Shubert Theatre Brooklyn	15		8/26/11	
116	Monopol Film Co		Majestic, Los Angeles	16		8/25/11	
117	Monopol Film Co		Princess, Montreal Can.	17		8/18/11	
118	Jake Wells		Bijou, Richmond Va	18		8/21/11	
119	H. Fitchenberg		New Orleans La	19		8/31/11	
120	Monopol Film Co		Belasco Washington D.C.	20		8/22/11	
121	Wm H. Swanson		Denver, Col.	21		8/30/11	
122	Wm H. Swanson		Denver, Col.	22		9/8/11	
123	Wm H. Swanson		Denver, Col.	23		9/8/11	
124	~~Eden Mus. Loan~~		~~23 St. (Exhibit)~~			9/10/11	
125	St Louis M.P. Co		St Louis Mo	25		9/11/11	
126	Wm H. Swanson		Denver Col.	26		9/8/11	
127	Monopol Film Co		Portland Me	27		9/9/11	
128	Consolidated Film & Sup. Co.		Galveston Texas	28		9/19/11	
129	Do		Do	29		9/19/11	
130	Do		New Orleans La	30		9/20/11	
131	H. A. Mackie		Paul Rainey Pictures	31		9/21/11	
132	H.H. Johnson		Champaign Ill	32		9/22/11	
133	E.M. Porter		St Joseph Mo (Consgt)	33		9/16/11	
134	Consolidated Film & Sup. Co.		Dallas Texas	34		9/20/11	
135	Do		Atlanta Ga	35		9/20/11	
136	Emile Stern		Bleecker Theatre N.Y.C.	36		10/1/11	
137	W.H. Swanson		Denver, Col	37		10/10/11	
138	Do		Do	38		10/10/11	
139	General Film Co		Kansas City Mo	39		11/1/11	
140	H. Fitchenberg		Vicksburg, Miss	40		10/10/11	
141	E.M. Porter (F.A. Selby)		Moberly Mo.	41		11/8/11	
142	H. Fitchenberg		Vicksburg Miss	42		11/1/11	
143	W.H. Swanson		Denver Col	43		10/10/11	
144	W.H. Swanson			44		[illegible]	
145	Drollinger Film Exchange		Evansville Ind.	45		[illegible]	
146	Manhattan Slide Co.		G.J. Holman Pachoguen Ill	46		[illegible]	
147	Herman Schoen			47		9/11/11	
148	Empire Film Co		251 West 19th St N.Y.C.	48		9/11/11	
149	E.J. Green		Tompkinsville S.C.				

DEFENDANTS' EXHIBIT NO. 5.

Modern Simplex Projector Demonstrated by Witness Kindelmann.

(Physical Exhibit.)

DEFENDANTS' EXHIBIT NO. 6.

POWER'S CAMERAGRAPH

The Perfect
Moving Picture Machine

1910 CATALOG

(WINTER EDITION)

THIS SUPERSEDES ALL PREVIOUS CATALOGUES

MANUFACTURED BY

NICHOLAS POWER COMPANY

Offices and Factory: 90 Gold Street

Modern Motion Picture Machines

Power's Cameragraph

THE NICHOLAS POWER COMPANY presents in the following pages illustrations and descriptions of Power's Cameragraph which has justly been styled by the moving picture public as "the modern motion picture machine." The models now offered to the public are Nos. 5 and 6. The former has been a favorite with exhibitors, operators and patrons of moving picture theatres since 1906 and its continued popularity in all parts of the North American Continent have led to continuance of its manufacture, notwithstanding the recent appearance of the later model No. 6, which has been designed especially to meet the most recent conditions which have arisen in the art of projecting motion pictures.

In the following pages are given detailed descriptions of both models, the new No. 6 Cameragraph being presented first and the older model No. 5, which is already familiar to all American exhibitors, being described later.

Power's Cameragraph No. 6
Complete Equipment

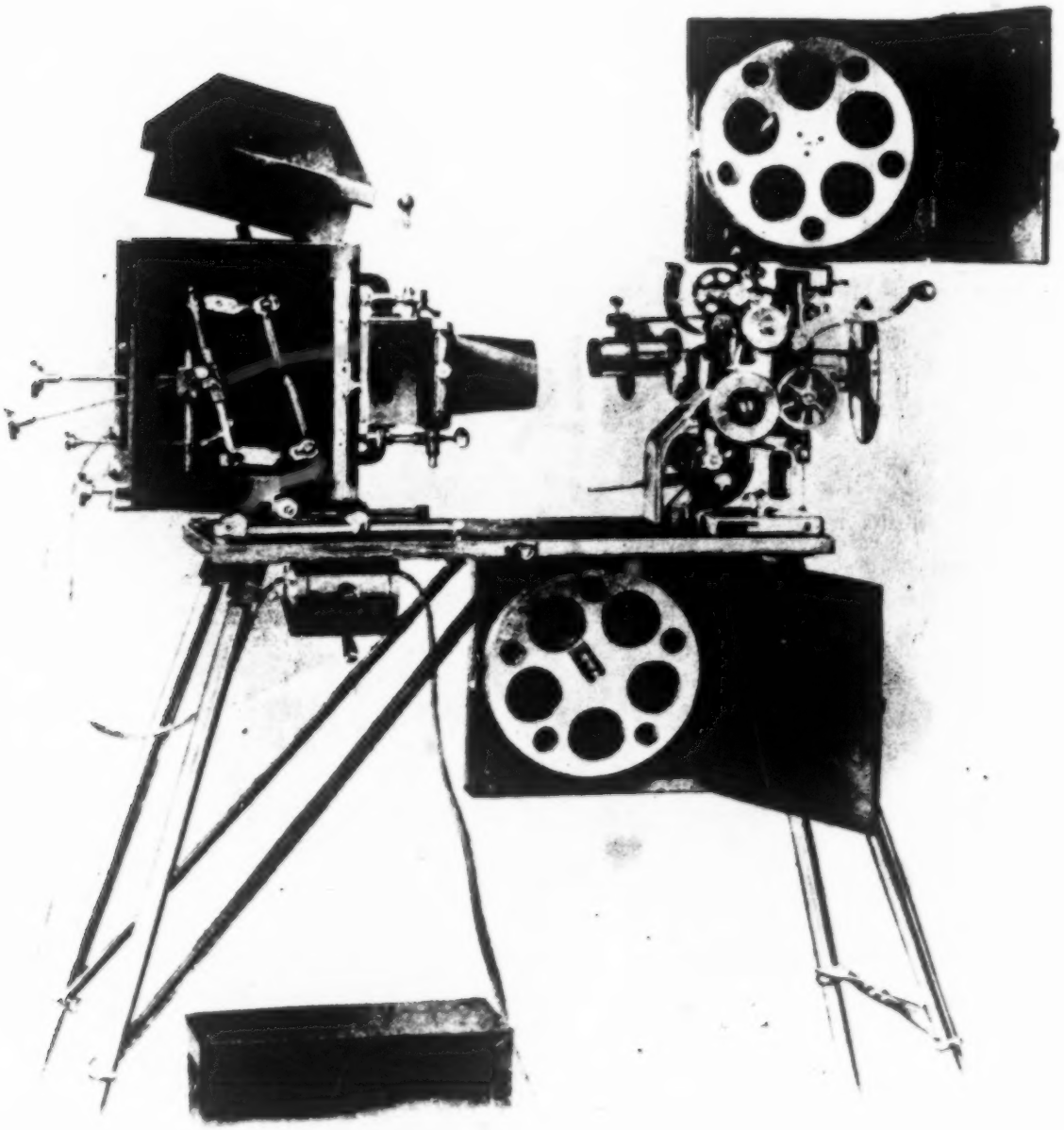

Fig. 1

The Perfected No. 6 Cameragraph

POWER'S CAMERAGRAPH No. 6 is a worthy successor to the No. 5 Cameragraph which for four years past has been accepted as the highest standard of moving picture machine construction. For more than two years our experimental department has been constantly at work endeavoring to produce a moving picture machine free from all the defects which have been present in greater or less degree in the moving picture machines which have been offered to the public. Owing to the extreme accuracy necessary in the manufacture of parts for moving picture machines, a very slight amount of wear upon the working parts is productive of unsatisfactory pictures, and the first consideration in the design of POWER'S CAMERAGRAPH No. 6 has been the production of a moving picture machine which will give long and constant service without perceptible wear upon the moving parts. The consideration next in importance in the design of the CAMERAGRAPH No. 6 has been the elimination of all adjustments not absolutely necessary. Other important objects sought in the manufacture of the new CAMERAGRAPH have been the elimination of the disagreeable flicker from the pictures, the projection of perfectly steady pictures, the provision of every possible device to insure absolute safety in handling inflammable celluloid films and the arrangement of film feeding devices that will prevent wear on the film.

All these objects have been attained, and in POWER'S CAMERAGRAPH No. 6 we present to the moving picture fraternity the best product of the mechanical genius and long experience of MR. NICHOLAS POWER, who for twelve years past, has been known to American moving picture exhibitors as the foremost designer and manufacturer of motion picture apparatus.

The Mechanism or "Machine Head"

This is the most vital part of a moving picture projecting machine and no degree of excellence in the rest of the equipment will atone for defects in ~~the mechanism.~~ For this reason, the design of the mechanism ~~of the No. 6 Cameragraph~~ has been made the subject of the most thorough and constant study from the first. While the lamphouse, lamp, film magazines and stand have all been designed with thoughtful study, on the mechanism itself the best efforts of the designer have been expended. In it are embodied the results of many years of experience as a builder, dealer in moving picture machines and as an exhibitor of moving pictures, and the needs of the theatre owner, the operator and the patron of the moving picture theatre have been constantly held in view.

Every part of the mechanism ~~of POWER'S CAMERAGRAPH No. 6~~ is made of the best material that money can buy, and the workmanship is of the highest quality. Our factory is equipped with the latest and best machine tools available, and our workmen are American mechanics of thorough training and of long experience. Every part of the mechanism is of ample size and strength to withstand the strain of constant service for many hours every day in the year. The frame is heavy and rigid; the gears are of large diameter and wide face, with spirally cut teeth which reduce noise, eliminate "back-lash" and insure steadiness of operation. The larger gears are made from a special alloy which reduces friction to a minimum, and the pinions are cut from the best grade of machine steel to withstand wear. The bearings are of exceptional length, insuring perfect alignment of the shafts or spindles which are of extra large diameter to prevent bending. All parts are perfectly interchangeable and are gauged with the highest degree of accuracy possible in manufacturing operations.

OUR GUARANTEE

~~On POWER'S CAMERAGRAPH No. 6 we stake our reputation as manufacturers, and our confidence in its excellence is shown in this guarantee.~~

We guarantee the mechanism of every POWER'S CAMERAGRAPH No. 6 to be free from defects of workmanship or material, and will replace free of charge within one year from date of sale every part showing a defect of any character or which becomes worn out in service, provided such part is returned to us, charges prepaid for inspection.

The Intermittent Movement

The Intermittent Movement of the No. 6 ~~CAMERAGRAPH~~ mechanism is the most radical departure from previous practice which has recently been made in construction of moving picture machines. It has *no pinwheel, no star wheel or "Geneva."* It is not a beater, or dog movement, nor is it a claw movement. Neither is it a frictional gripper. It is practically noiseless in operation; it will last indefinitely without perceptible wear. It moves the film with the least possible strain, and the picture projected is characterized by perfect steadiness.

Only two parts are embodied in the intermittent movement. The driving element of this movement is a revolving cam of hardened tool steel which is of diamond shape and is formed integral with a heavy steel disc rigidly secured to the main spindle or shaft of the mechanism. A locking ring for the driven element is also formed on the face of the disc in such relation to the cam that the driven element passes without noise from engagement with the cam into engage-

No. 6 Cameragraph Mechanism

View Showing Automatic Shutter and Film Shields.

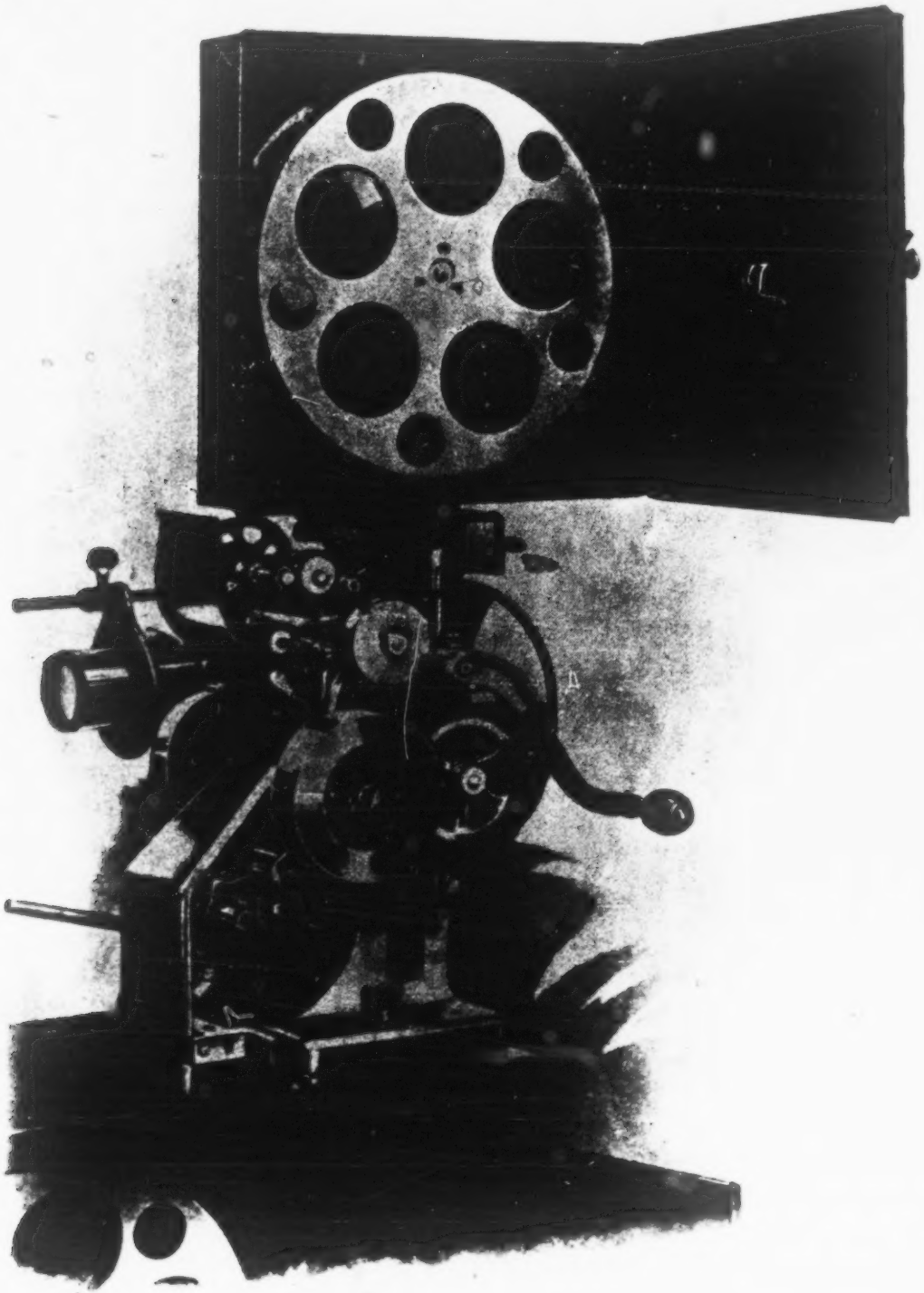

Fig. 2

ment with the locking ring. The driven element is a cross which is rigidly mounted on the end of the intermittent spindle and is provided with a heavy pin on the face of each arm for engagement with the cam. The cross and the pins are cut from a single block of ~~tool~~ steel so that the pins cannot possibly loosen and be forced out of proper relation to the cam. The parts of the intermittent movement are enclosed in an oil-tight casing with an oil feed cup, as shown in Fig. 1, and by keeping the casing properly supplied with oil a practically noiseless operation of the movement without perceptible wear on the parts is insured. With this novel type of intermittent movement more rapid travel of the film is produced but with less strain on the perforations than with other types.

The Shutter

The shutter is of the three wing type and is mounted on a spindle which projects forward from the front plate of the mechanism so that the shutter intercepts the rays of light in front of the projection lens. The shutter is adjustable longitudinally of the spindle so that it can be set close to the front of the lens, whether the lens is provided with a long or short barrel. The hub of the shutter consists of an inner and an outer sleeve. The inner sleeve is directly attached to the spindle, and the outer sleeve is readily adjustable on the inner sleeve to permit quick and accurate setting of the shutter in proper relation to the intermittent movement. The mounting of the shutter spindle are such that, when the shutter is detached for packing the mechanism, the spindle may be swung downward into close contact with the front of the mechanism, where it will be protected from injury in shipment. Owing to the rapid movement of the film produced by the novel intermittent movement, the shutter wings are cut narrower than in shutters of the three wing type used on other moving picture machines, and brighter illumination on the screen is obtained. As the shutter is mounted in front of the projection lens, there is no obstruction between the lens and the aperture plate or picture gauge, thus permitting the use of a lens of the shortest possible focus. The shutter gears are angle gears (not bevel gears) and have faces 3/8 of an inch in width, so insuring long service without perceptible wear.

Framing the Picture

The picture is framed by a slight vertical movement of a carriage bearing the intermittent sprocket, and the framing lever is mounted on the base of the mechanism or machine head where it can be readily reached with the left hand without interfering with the operation of the machine. The movement of the framing carriage does not alter the relation of the shutter to the picture gauge or projection aperture. The gearing connection to the framing carriage has all the gears arranged in a straight line, eliminating a toggle joint and toggle joint gears.

No. 6 Cameragraph Mechanism

View Showing Automatic Shutter and Film Shields.

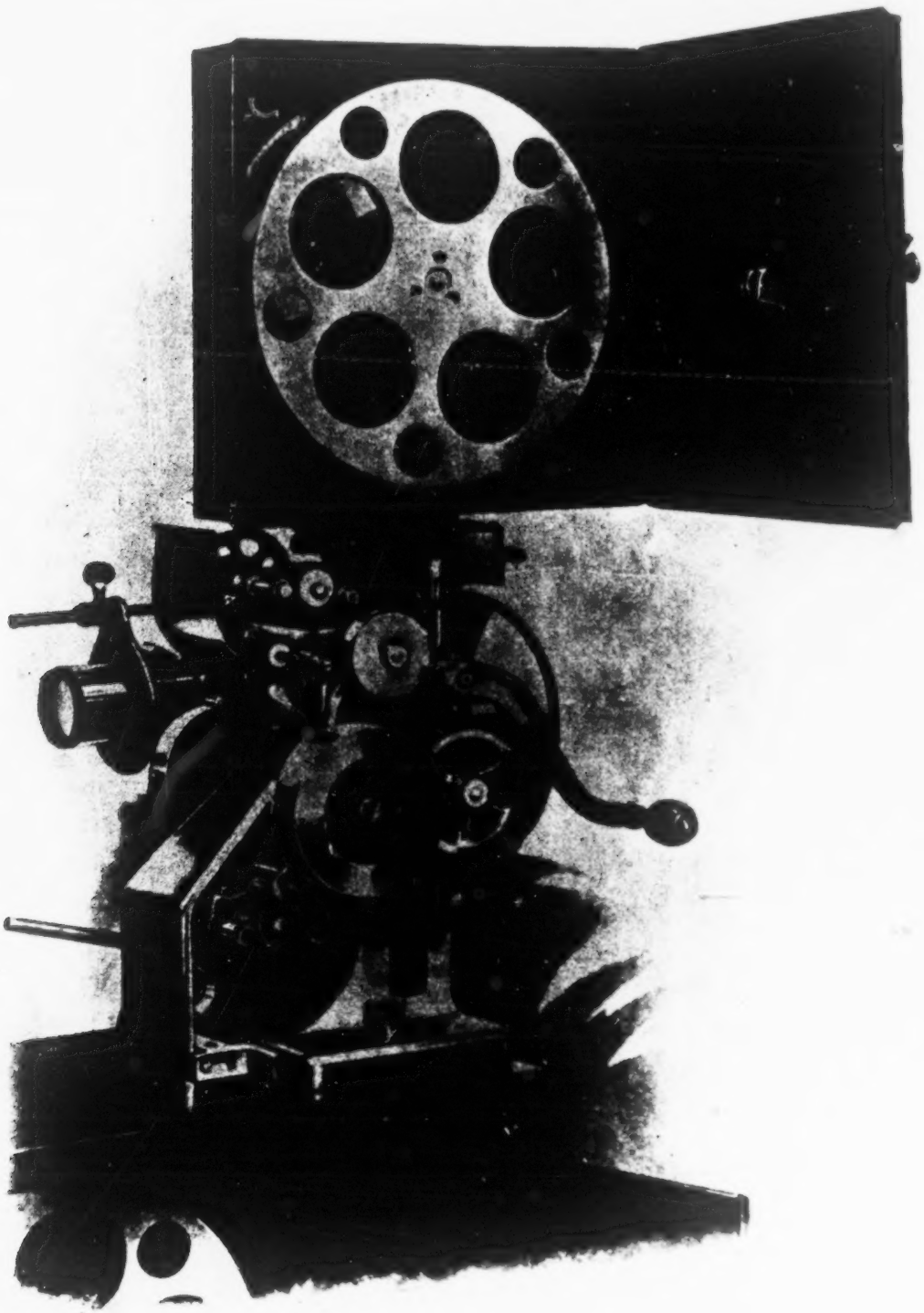

Fig. 2

ment with the locking ring. The driven element is a cross which is rigidly mounted on the end of the intermittent spindle and is provided with a heavy pin on the face of each arm for engagement with the cam. The cross and the pins are cut from a single block of ~~tool~~ steel so that the pins cannot possibly loosen and be forced out of proper relation to the cam. The parts of the intermittent movement are enclosed in an oil-tight casing with an oil feed cup, as shown in Fig. 1, and by keeping the casing properly supplied with oil a practically noiseless operation of the movement without perceptible wear on the parts is insured. With this novel type of intermittent movement more rapid travel of the film is produced but with less strain on the perforations than with other types.

The Shutter

The shutter is of the three wing type and is mounted on a spindle which projects forward from the front plate of the mechanism so that the shutter intercepts the rays of light in front of the projection lens. The shutter is adjustable longitudinally of the spindle so that it can be set close to the front of the lens, whether the lens is provided with a long or short barrel. The hub of the shutter consists of an inner and an outer sleeve. The inner sleeve is directly attached to the spindle, and the outer sleeve is readily adjustable on the inner sleeve to permit quick and accurate setting of the shutter in proper relation to the intermittent movement. The mounting of the shutter spindle are such that, when the shutter is detached for packing the mechanism, the spindle may be swung downward into close contact with the front of the mechanism, where it will be protected from injury in shipment. Owing to the rapid movement of the film produced by the novel intermittent movement, the shutter wings are cut narrower than in shutters of the three wing type used on other moving picture machines, and brighter illumination on the screen is obtained. As the shutter is mounted in front of the projection lens, there is no obstruction between the lens and the aperture plate or picture gauge, thus permitting the use of a lens of the shortest possible focus. The shutter gears are angle gears (not bevel gears) and have faces 3/8 of an inch in width, so insuring long service without perceptible wear.

Framing the Picture

The picture is framed by a slight vertical movement of a carriage bearing the intermittent sprocket, and the framing lever is mounted on the base of the mechanism or machine head where it can be readily reached with the left hand without interfering with the operation of the machine. The movement of the framing carriage does not alter the relation of the shutter to the picture gauge or projection aperture. The gearing connection to the framing carriage has all the gears arranged in a straight line, eliminating a toggle joint and toggle joint gears.

No. 6 Cameragraph Mechanism

Front View Showing Shutter and Stereopticon Attachment.

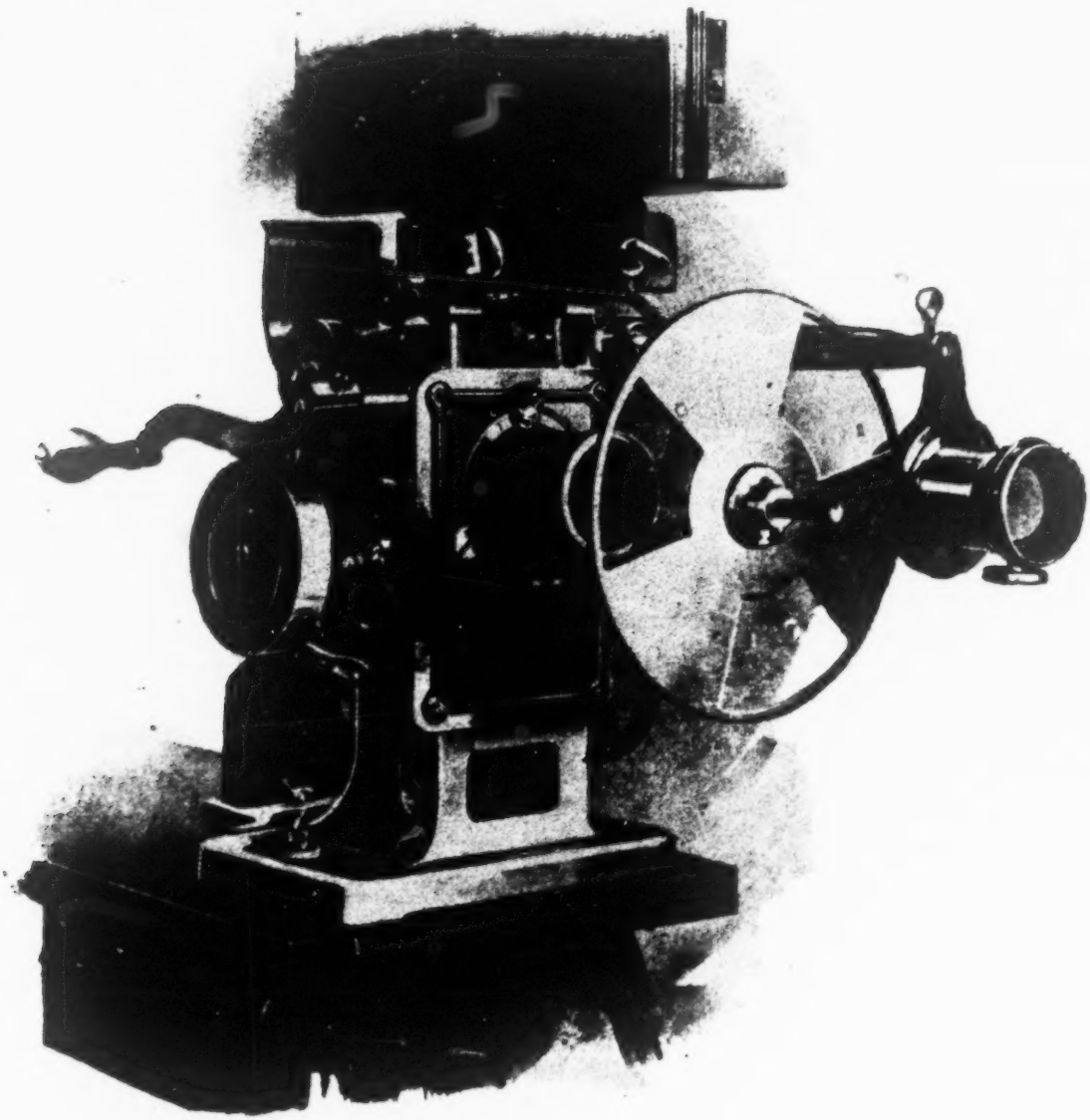

Fig. 3

The Film Feed

The film feed comprises three sprockets in accordance with the usual American practice. The top feed sprocket and the bottom, or takeup feed sprocket, run constantly and the middle, or intermittent sprocket, makes a complete turn in four successive movements with alternate periods of rest, which are four times as long as the period of movement. All the sprockets are cut from specially selected steel to insure long wear and perfect accuracy of size and form.

The film is held in position upon the top feed sprocket by means of two rollers, one a flanged guide roller turning on a fixed spindle, and the other a holding roller mounted on a spring pressed bracket. The latter roller rests directly over the top feed sprocket when in use, and keeps the film in perfect engagement with the sprocket teeth.

The film is held in position on the intermittent sprocket by means of a roller mounted on a pivoted bracket, which is so shaped that it serves also as a guide for the film. When the idler roller for the intermittent sprocket is in service, it lies practically under the intermittent spindle and insures engagement of the film with at least four teeth on each hub of the intermittent sprocket.

A pair of idler rollers are provided to keep the film in position upon the lower or takeup feed sprocket, these idlers being mounted in a frame which is arranged to rock on a spindle carried by a spring pressed, pivoted bracket. The lower, or takeup, feed sprocket controls the rate at which the film is taken up in the lower magazine, and it is of the utmost importance that riding of the film on this sprocket be prevented. This is completely accomplished by means of the arrangement of idler rollers, above described.

To prevent wear of the film in traveling over the sprockets, all the idler rollers, which hold it in position thereon, are so supported that no pressure of the film against the sprockets is produced by the idler rollers, but the possibility of disengagement of the film with the sprockets is completely obviated.

Film Guides and Tension Devices

These are arranged to make the friction of the film when traveling through the mechanism as slight as possible and to insure perfectly straight travel of the film past the aperture plate or picture gauge. At the top of the gate of the mechanism a pair of light, flanged guide rollers is provided, between which the film travels to the aperture plate. The tension on the film necessary to insure steady pictures is produced by means of the aperture plate, which is provided with wear strips of glass-hard steel, and a tension plate of hardened steel which is pressed against the film by springs, the pressure of which can be accurately adjusted. The film is held perfectly flat with less than one-half the friction produced by any other type of film tension device.

View of No. 6 Cameragraph Mechanism

Showing Shutter Gearing and Casing of Intermittent Movement.

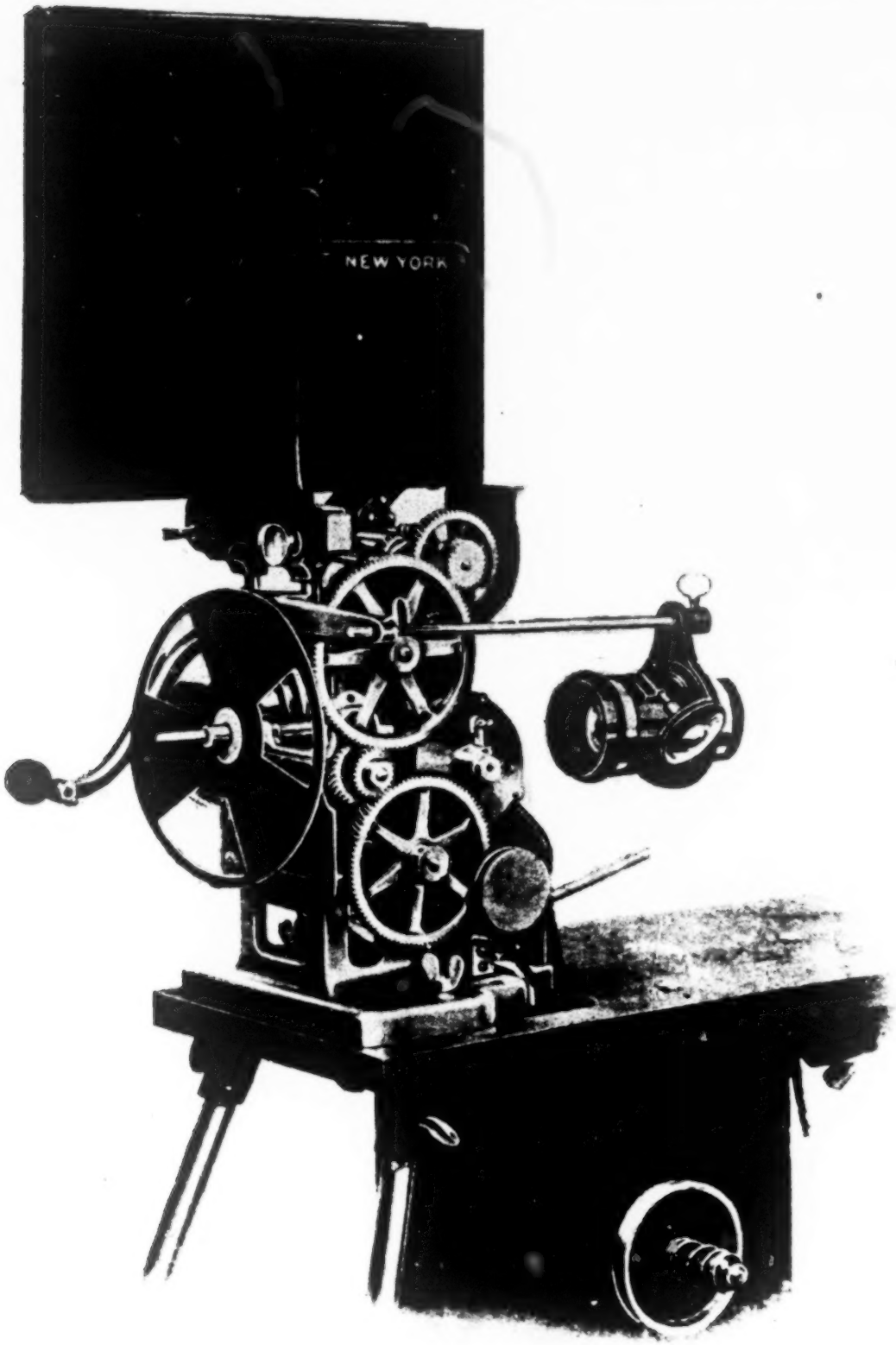

Fig. 4

To prevent wear on the film in passing from the intermittent sprocket to the takeup feed sprocket, a steel apron with polished surface is provided, over which the film travels with scarcely perceptible friction and without noticeable wear.

Stereopticon Attachment

The stereopticon attachment consists of a straight bracket extending laterally from the mechanism a sufficient distance to clear the shutter, a rod adjustably mounted in the free end of the bracket and a stereopticon lens collar casting adjustably mounted on the rod. The bracket is laterally adjustable on the mechanism and is readily removable to facilitate packing. The lens collar casting is shiftable by adjustment of the casting on the rod, and by adjusting the rod in the bracket to a sufficient extent to permit the use of stereopticon lenses of practically any focal length.

Safety Devices

The safety devices, to protect the film from fire, comprise upper and lower magazines, an automatic fire shutter and upper and lower film shields.

THE FIREPROOF FILM MAGAZINES, Fig. 1, are of the square type, insuring easy insertion and removal of the film and reels, and are provided with the celebrated POWER'S PATENT FILM VALVES—the only valves that absolutely prevent the passage of flame into the magazine. The lower magazine is provided with Power's patent automatic takeup device, which maintains uniform tension on the film at all times, whether the reel be empty or full.

THE AUTOMATIC FIRE SHUTTER, Fig. 1, is simple in construction, positive in operation, and the operating mechanism is all readily accessible. The parts are constructed to withstand wear and operate with very little friction. A little heavy oil or melted vaseline should be used to lubricate the parts from time to time to insure perfect operation.

THE FILM SHIELDS, Fig. 1, completely enclose and protect the film in its travel from the upper to the lower magazine. ~~The upper film shield is mounted on the film gate and moves out of the way when the gate is open for threading the film through the machine. The lower shield is mounted on the base of the machine head and is arranged to hold the film gate open while the film is being threaded.~~

Threading the Film

The devices which hold the film upon the sprockets are arranged to afford the utmost ease in threading. The pivoted brackets carrying the idlers, or tension rollers, are swung on their pivots to lift the rollers out of proximity to their

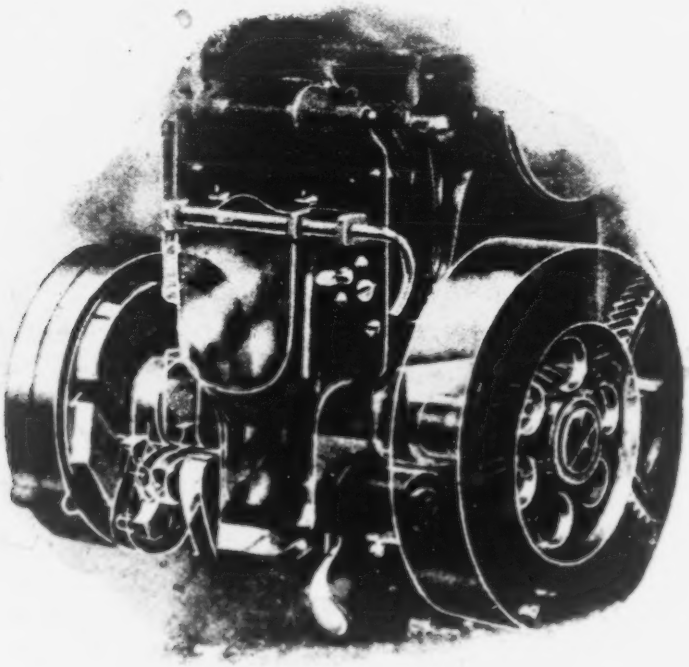

Fig. 5
The Intermittent Movement with Oil-tight Casing.

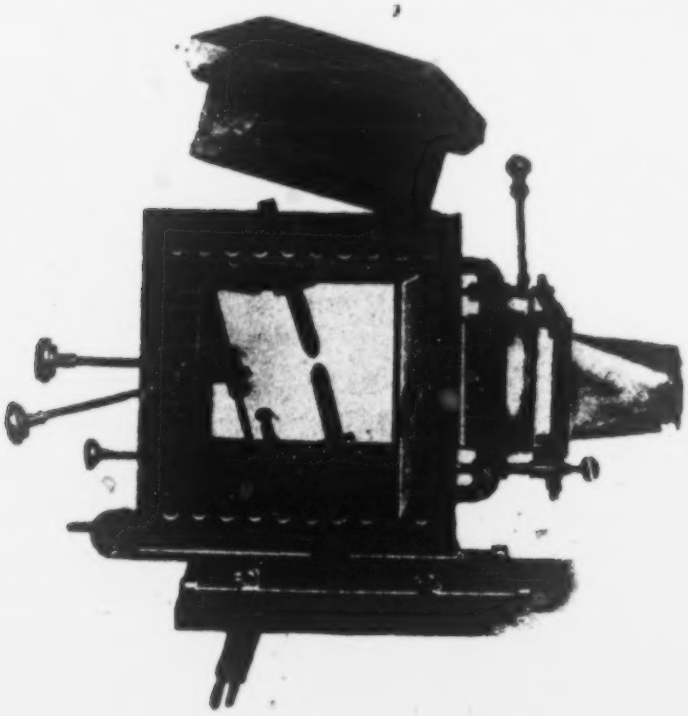

Fig. 6
Lamp House Showing Lamp and Condensers.

sprockets and the film is first placed on the upper or top feed sprocket. The tension roller, or idler, is then moved into position adjacent to the sprocket, an adjustable stop on the bracket preventing the roller from actually resting on the film. The film is next secured on the intermittent sprocket in like manner, a considerable amount of slack being left in the film so that a loop of about two inches length will be formed in the film when the gate is closed to hold the film in place. The film is then secured on the lower or takeup feed sprocket in similar manner, an extra large loop being maintained in the film between the intermittent sprocket and the lower sprocket. From the lower sprocket the film is passed into the lower magazine through the film valve which is placed directly below the lower sprocket. It is then attached to the reel in the lower magazine in the usual manner and on closing the magazines the machine will be found ready for operation.

The Lamp House

The lamphouse is extra large with removable top and back. Doors are provided on both sides and are made as large as possible to afford ready access to every part of the lamp. The lamphouse is mounted on a heavy base casting carried by a set of adjustable sliding ways, which provide for forward and backward movement in focusing as well as lateral movement for stereopticon use.

Condensers and Support

The two condensing lenses are carried in a rectangular box which is permanently attached to the front of the lamphouse. Each lens is held in a separate holder or clip, which can be instantly removed in case of breakage of the condenser without disturbing the other condenser. The condensers are of the best quality of triple annealed lead glass, and the holders or clips are so designed that perfect freedom of expansion and contraction is permitted, thus lessening the danger of breakage.

Page 20

The "Dowser" or Dissolving Shutter

This is mounted just in front of the condenser support and is pivoted to swing in a plane at right angles to the line of projection. It not only serves to protect the film and the mechanism from the heat of the arc lamp when the machine is not in operation, but, in the hands of a capable operator, serves as an excellent dissolving shutter when stereopticon slides are being changed.

The Slide Carrier

The slide carrier is made of sheet steel of sufficiently heavy gauge to prevent warping under the heat of the arc lamp, and is of the latest design

Power's Cameragraph No. 5

The No. 5 Cameragraph has been before the moving picture public for some four years, and during that entire period has been the standard of excellence in moving picture machines. It is lighter and more compact than the No. 6 Cameragraph and, owing to its lightness, is not so well adapted to heavy service as the new No. 6 Cameragraph described in the preceding pages; but for traveling exhibitors and for the service required in theatres, which do not run continuously, it will give most satisfactory service. In material, workmanship and finish it is of the same high grade as the No. 6 Cameragraph and in beauty of design, noiseless operation and ease of running, it is the peer of any moving picture machine ever produced. The pictures projected are clear, steady, brilliant and practically free from flicker and the price will commend it to exhibitors who do not wish to invest as much in their machine equipment as would be required for the purchase of a No. 6 Cameragraph.

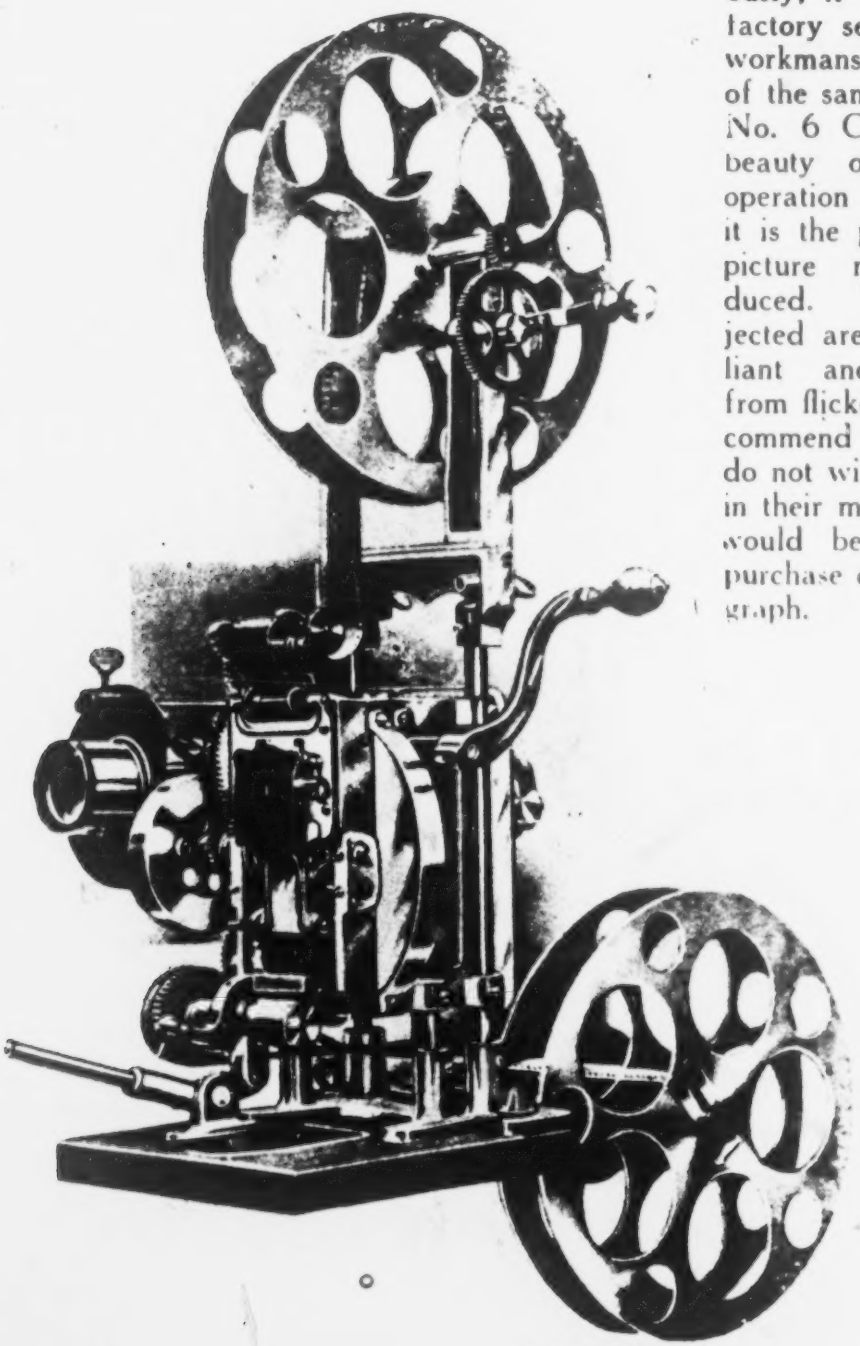

Fig. 13

No. 5 Cameragraph Mechanism

The general appearance of the No. 5 Cameragraph Mechanism is well shown in Figs. 10 and 11. In these figures the No. 5 Mechanism is shown equipped with reel hanger and takeup feed device, but without magazines or automatic fire shutter. As thus equipped it is adapted for use in all localities where these safety devices are not required by the local regulations governing the installation of motion picture machines.

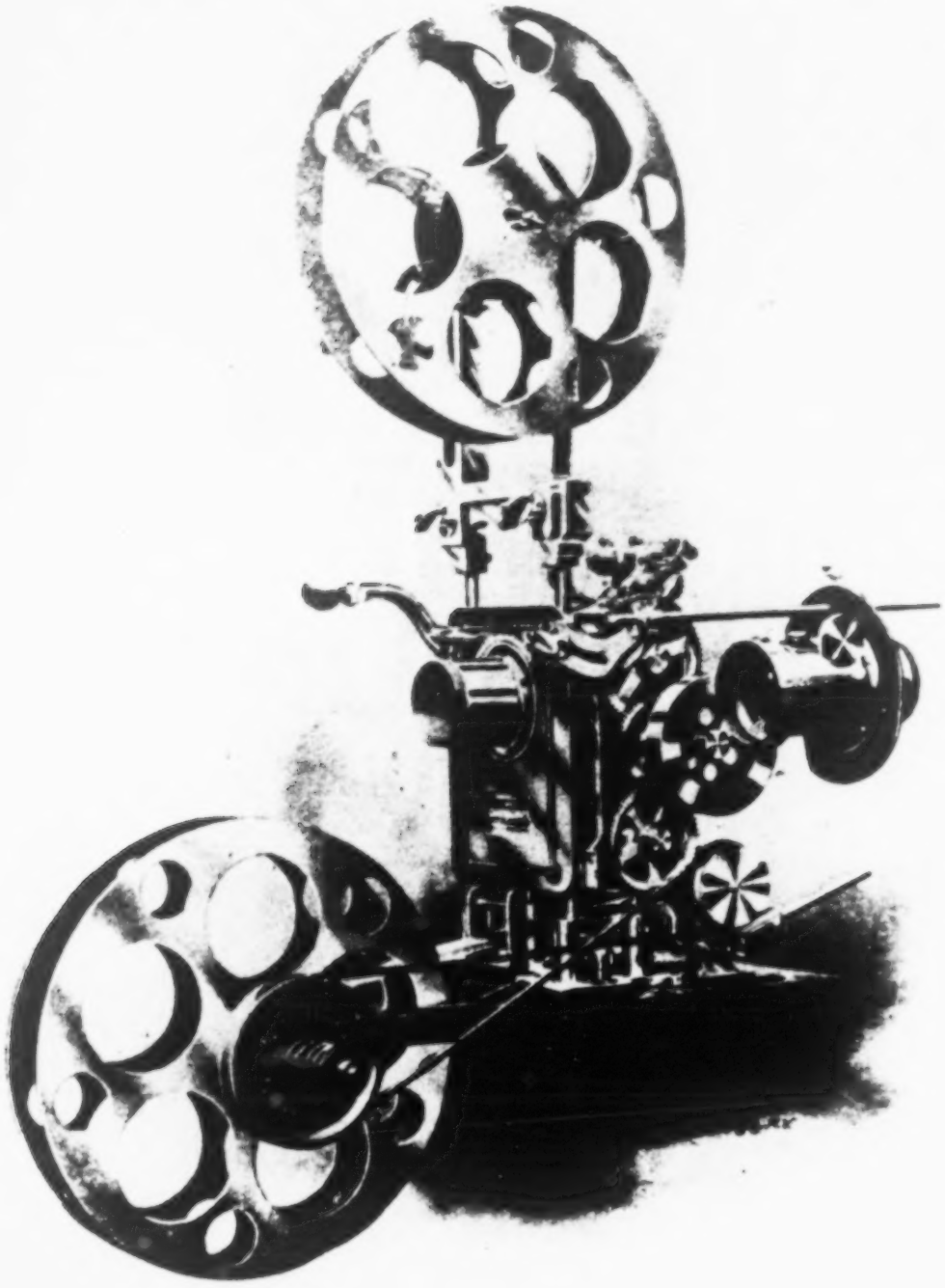

Fig. 14

Film Feeding Devices

The film feeding devices are of the type which has been almost universally accepted in the United States. These devices include three sprockets, known respectively as the upper feed sprockets, the intermittent sprocket and the lower, or takeup feed sprocket. The upper feed sprocket and the takeup feed sprocket run continuously, the former maintaining the supply of film to the intermittent sprocket and the latter regulating the rate at which the film is taken up on the takeup reel. The intermittent sprocket moves the film intermittenly across the projection aperture, allowing the film to stop momentarily after each picture on the film is brought before the projection aperture. The movement of the intermittent sprocket is effected by a star wheel or Geneva stop and a cam wheel with one pin which engages the slots in the star wheel or Geneva stop. With this movement the period of exposure of each picture is made three times as long as the period of movement between the exposures. This rate of movement, together with the effective action of the revolving shutter, insures a picture practically without flicker, which does not cause eye strain, and the rate of movement of the film produced by this intermittent movement is such that the film itself is not subjected to injurious strain.

The Shutter

The revolving shutter by which the light on the screen is cut off during movement of the film is of the balanced type, comprising two oppositely arranged wings—one of which is relatively wide and obstructs the light on the screen during the movement of the film, and the other relatively narrow and adapted to interrupt the light while the picture is on the screen, so as to prevent flicker. This shutter is mounted close to the steel aperture plate against which the film is held, thus making it possible to use lenses of short focus.

The Framing Mechanism

This is one of the distinctive features of Power's Cameragraph No. 5, and comprises a small carriage mounted on the main frame of the mechanism and arranged for a vertical sliding movement. The intermittent movement is carried by this carriage which can be shifted by means of a short lever connected with the carriage by means of a toggle joint. The gearing for driving the intermittent movement is ingeniously designed so that driving connection is maintained between the crank shaft on the main frame of the machine and the main spindle carrying the one pin cam wheel and flywheel, whatever the position of the framing carriage. As the framing carriage is light and easily shifted, the framing of the picture can be effected instantly without imparting vibration to the mechanism, or its stand. These are some of the special advantages of this type of framing device over those in which the entire film feeding mechanism is moved upoand down.

Tension Devices

The film is kept in proper engagement with the feed sprockets by means of rollers arranged adjacent to the sprockets. All these rollers, or idlers, are mounted

on pivoted brackets held in relation to the sprockets by means of springs. The space between the rollers or idlers and the sprockets is regulated by set-screws mounted on the brackets carrying the rollers. These set-screws serve to prevent undue pressure of the rollers, or idlers, upon the film. The proper tension of the film while passing the aperture plate is secured by means of tension springs mounted on the door, or gate, of the mechanism and arranged, to press the film against the aperture plate, which is made of mild steel punched out with dies to secure perfect uniformity, and provided with highly tempered steel guide strips on its face, which insure the greatest possible durability of the aperture plate under the wear from the film.

Stereopticon Attachment

The No. 5 Cameragraph mechanism is provided with a stereopticon attachment, consisting of an objective lens of proper focal length, and an adjustable supporting device. The supporting device comprises a bracket holder mounted near the top of the mechanism on the left hand side, a bracket adjustable on the holder and a rod adjustable longitudinally in the bracket upon which the stereopticon lens is suspended by means of a flange casting to which the lens ring is screwed. The entire stereopticon attachment can be easily removed for convenience in packing. In using the stereopticon, the lamphouse, which will be subsequently described, is moved to the left upon sliding ways provided for that purpose, so that the beam of light from the lamphouse may be directed full upon the stereopticon lens.

Lamp Houses

The No. 5 Cameragraph is furnished with either of two styles of lamphouses, which are alike in their principal features, but are characterized by difference in details of construction. The regular lamphouse shown in Fig. 15, is the lower priced of the two styles and gives excellent service, but is not provided with certain safety features characterizing the other, or New York Approved, lamphouse, as shown in Fig. 16. Both lamphouses are provided with handsomely finished sliding ways to permit forward and lateral adjustment of the lamphouse. Both lamphouses are constructed of the highest grade of Russia iron and are provided with condenser cells or mounts arranged to hold two 4½ inch condensers. At the front of each style of lamphouse a ~~dissolving shutter or~~ dowser is arranged directly in front of the condensers where it

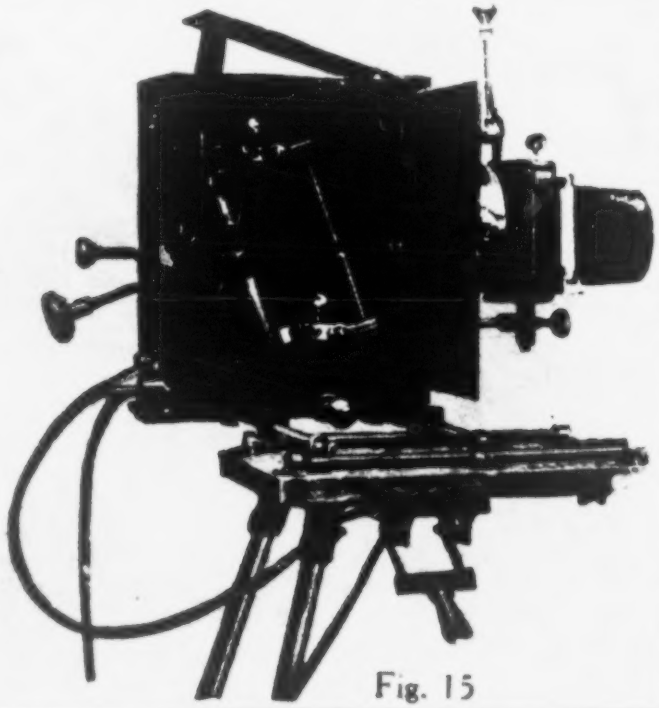

Fig. 15

DEFENDANTS' EXHIBIT NO. 7.

Section Model of Power's Intermittent Movement.

(Physical Exhibit.)

DEFENDANTS' EXHIBIT NO. 8.

Power's Projector Head.

(Physical Exhibit.)

2

9a

			Mod.	Size No	Rel	
Oct.	15	Klemm Optical Co.	5	6591	1051	
		. . .	5	6592	1052	
		. . .	5	6593	1053	
		. . .	5	6594	1054	
		. . .	5	6595	1055	
		. . .	5	6596	1056	
		Actograph Co	5	6597	1057	
	16	Samuel Film Service	5	6598	1058	
		. . .	5	6599	1059	
	18	Actograph Co.	5	6600	1060	
		Buffalo Film Exchange	5	6601	1061	
		Empire Film Co	5	6602	1062	
	20	L. W. Prince	5	6089	574	
	21	Beer & Hengstler	5	6603	1063	
		Vitagraph Co	5	6604	1064	
		Actograph Co	5	6605	1065	
	23	Miles Bros.	5	6607	1066	
		Empire Film Co	5	6606	1065	
		Auti-Trust Film Co	5	6608	1067	
		. . .	5	6609	1068	
		Actograph Co	5	6610	1069	
	26	F. J. Howard	5	6544	1003	
	26	L. W. Swaab	5	6611	1070	
	27	Chicago Film Exchange	5	6612	1071	
	28	L. W. Swaab	5	6613	1072	
		. . .	5	6614	1077	
		. . .	5	6615	1078	
	29	Peoples Vaudeville Co	5	6616	1079	
			5	6617	1044	Ret
	30	Lyman H. Howe	5	6618	1080	
		L. W. Swaab	5	6619	1081	
		. . .	5	6620	1085	
			5	a	1072	Ret
V 1		Miles Bros.	6	1	1070	
		Actograph Co	5	6547	1006	
Nov.	1	. . .	5	6624	1090	
		W. K. Greene	5	6621	1064	
		. . .	5	6622	1105	
		J. J. Pete - J. Hopkinson	5	6623	1106	
	3	Actograph Co.	5	6630	1096	
		Auti-Trust Film Co	5	6626	1092	
		Empire Film Co	5	6375	1037	
		F. J. Howard	5	6627	1093	
		. . .	5	6628	1094	
		. . .	5	6629	1095	

DEFENDANTS' EXHIBIT NO. 9-B.

Def Exh 9b

Apr	2	Sufing Hammer Co	Troy Pa	6B	24509
May	1	Southern Tea Eq Co	Dallas, Tex	6B	24510
"	"	"	"	6B	24511
"	"	"	"	6B	24512
"	"	"	"	6B	24513
"	"	"	"	6B	24514
"	11	Pac. Amuse Supply Co	Los Angeles, Cal	6a	24515
"	"	"	"	6a	24516
"	"	Western Supply Co	Omaha, Nebr	6a	24517
"	"	"	"	6a	24518
Apr	12	Perkins Elec Co	Montreal, Can	6B	24519
"	"	"	"	6B	24520
"	"	"	"	6B	24521
May	15	United Tea Eq Corp	Rangewood, Mo	6a	24522
"	18	V. L. [illegible] Mfg	S. L. City, Utah	6a	24523
"	"	Pacific Amuse Co	Los Angeles, Cal	6a	24524
May	4	Universal F Mfg Co	San Juan	6B	24525
"	"	"	"	6B	24526
Jan	19	Frame Lisycroft Co	Dumaguete	6B	24527
"	"	"	"	6B	24528
Apr	10	Southern Tea Eq Co	Atlanta, Ga	6B	24529
"	"	"	"	6B	24530
May	4	Pac. Amuse Co	Los Angeles Cal	6a	24531
"	8	L. M. Swoat	Shippensburg Pa	6a	24532
"	9	United Tea Eq Co	Chicago, Ill	6a	24533
"	"	"	"	6a	24534
"	"	"	"	6a	24535
"	"	"	"	6a	24536
"	"	"	"	6a	24537
Apr	22	W. J. Mandelbaum	Cleveland, Ohio	6B	24538
"	"	"	"	6B	24539
May	1	Tea Film Cale L. Co	Pittsburgh, Pa	6B	24540
"	"	"	"	6B	24541
Apr	24	M. P. Tea Eq Co	Buffalo, N.Y.	6B	24542
"	"	"	"	6B	24543
"	"	"	"	6B	24544
"	"	"	"	6B	24545
"	"	"	"	6B	24546
Apr	12	L. M. Swoat	Philadelphia Pa	6B	24547
"	"	"	"	6B	24548
"	24	M. P. Tea Eq Co	Buffalo, N.Y.	6B	24549
"	"	"	"	6B	24550

U. S. DISTRICT COURT

M. D. PENN.

DEFT. EX.

46

1918

Def Exh. 9C

Jan 23	K.+D. Bros	Bombay India	6B	2	583	26483
Dec 29	Perkins Elec. Co	Montreal Can.	6B	2	584	26484
Jan 23	K.+D. Bros	Bombay India	6B	2	585	26485
" "	" "	" "	6B	2	586	26486
Dec. 28	U.S.S. Matawaska	Hoboken N.J.	6a	2	587	26487
Jan 23	N. D. Bros	Bombay India	6B	2	588	26488
Jan 2	United Thea. Eq. Co	Boston Mass.	6a	2	589	26489
Mar 15	" " " "	Cincinnati Ohio	6a	2	590	26490
Jan. 16	Y.M.C.A. Paris		6	2	591	26491
" "	" "		6	2	592	26492
" "	" "		6	2	593	26493
" "	" "		6	2	594	26494
" "	" "		6	2	595	26495
" "	" "		6	2	596	26496
" "	" "		6	2	597	26497
" "	" "		6	2	598	26498
" "	" "		6	2	599	26499
" "	" "		6	2	600	26500
" "	" "		6	2	601	26501
" "	" "		6	2	602	26502
" "	" "		6	2	603	26503
" "	" "		6	2	604	26504
" "	" "		6	2	605	26505
" "	" "		6	2	606	26506
" "	" "		6	2	607	26507
" "	" "		6	2	608	26508
" "	" "		6	2	609	26509
" "	" "		6	2	610	26510
Jan 4	South. Thea. Eq. Co	Stillwater Okla	6B	2	611	26511
" "	" " " "	" "	6B	2	612	26512
Jan 3	South. Thea. Eq. Co.	Dallas Texas	6B	2	613	26513
" 4	United " " "	Cinn. Ohio	6B	2	614	26514
" "	" " " "	" "	6B	2	615	26515
" "	" " " "	" "	6B	2	616	26516
" "	" " " "	" "	6B	2	617	26517
" "	" " " "	" "	6B	2	618	26518
" "	" " " "	" "	6B	2	619	26519
" 3	" " " "	Clev. "	6B	2	620	26520
" "	" " " "	" "	6B	2	621	26521
" "	" " " "	" "	6B	2	622	26522
" 7	South " " "	Atlanta Ga.	6B	2	623	26523
" "	" " " "	" "	6B	2	624	26524

U.S. DIST. COUR.
M. D. PENN.
DEFT. EX.

DEFENDANTS' EXHIBIT NO. 10.

Edison Projecting Kinetoscopes

This Catalog supersedes Catalog
No. 500 and all previous
Catalogs

TRADE MARK
Thomas A Edison

Manufactured by
THOMAS A. EDISON, INC.
Orange, N. J., U. S. A.

Sold by dealers in the principal cities of the world

Introduction

FOR nearly a decade the Edison Projecting Kinetoscope has enjoyed the hearty support and steady patronage of exhibitors of motion pictures. Being the first practical projecting machine sold, it early established an enviable reputation for safety, reliability and durability, and has since consistently maintained its position at the head of the long list of machines offered for the exhibition of motion pictures.

From time to time, particularly during recent years, other projecting machines proclaimed by their makers to be superior, have appeared, but they have merely served to emphasize the true worth of the Edison.

Two types of Edison Kinetoscopes are now made—the Model "D" and the Exhibition Model. The Model "D" is recommended for all permanent installations; and, in fact, whenever portability is not a serious consideration. For traveling exhibitors, who are anxious to "travel light," the Exhibition is recommended.

In the construction of both models, first consideration was given to simplicity—ease of operation—and after that, safety and durability. No special knowledge of electricity or mechanics is necessary to properly operate either model. The film is carefully protected from contact with the light, except for the instant it is passing through the picture gauge, and even then it must pass at a certain speed or the light is cut off by an automatic shutter. Actual tests conducted in the Edison Laboratory under Mr. Edison's personal direction have demonstrated that the Edison Kinetoscope will out-wear, by a considerable leeway, any other projecting machine on the market, and at the same time show the minimum of wear on film.

Both the Model "D" and the Exhibition are made with one-pin movement, insuring steady and flickerless pictures. In both types the ease with which parts can be changed is an important feature.

All Edison machines are sold under a warranty that reads as follows:

THE EDISON GUARANTEE

Edison Kinetscopes are made with the highest degree of mechanical skill; of material that is carefully selected and tested, and are warranted free from defects of workmanship and material.

They are sold with the warranty that they are mechanically perfect, and we will replace, without charge to the purchaser, any part which shows any defect within one year from date of sale, if such part is shipped to us, (charges prepaid), for inspection.

This guarantee automatically terminates if other than Edison parts are used on the machine to which it applies.

A perusal of the detailed descriptions of both models arranged on the pages which follow should demonstrate to the satisfaction of all prospective purchasers that the Edison —the first practical motion picture machine, and the simplest and sturdiest of all—is the one that will give the maximum of satisfactory service for the longest period of time.

EDISON KINETOSCOPES

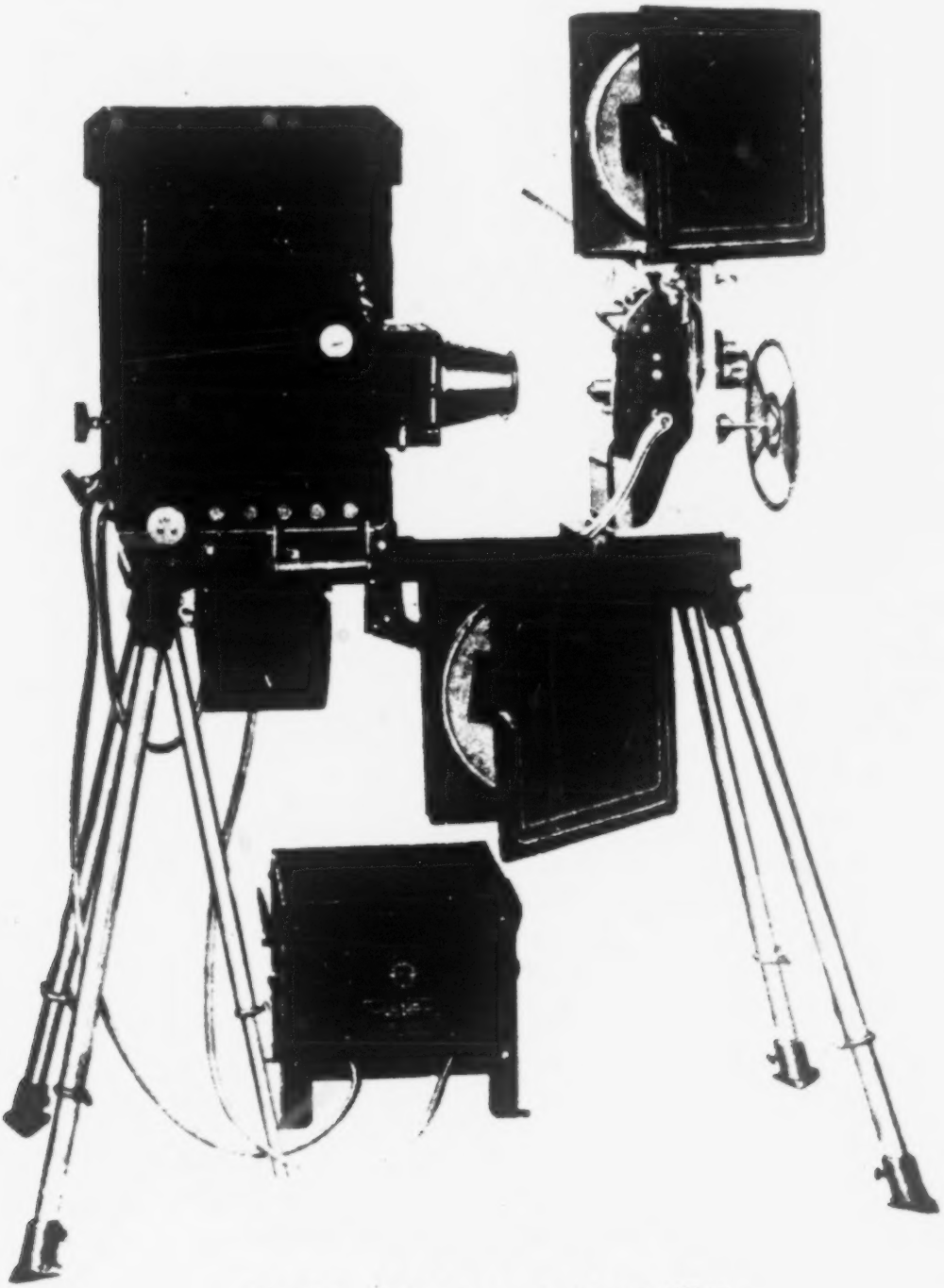

The Edison Kinetoscope. Model "D"

EDISON KINETOSCOPES

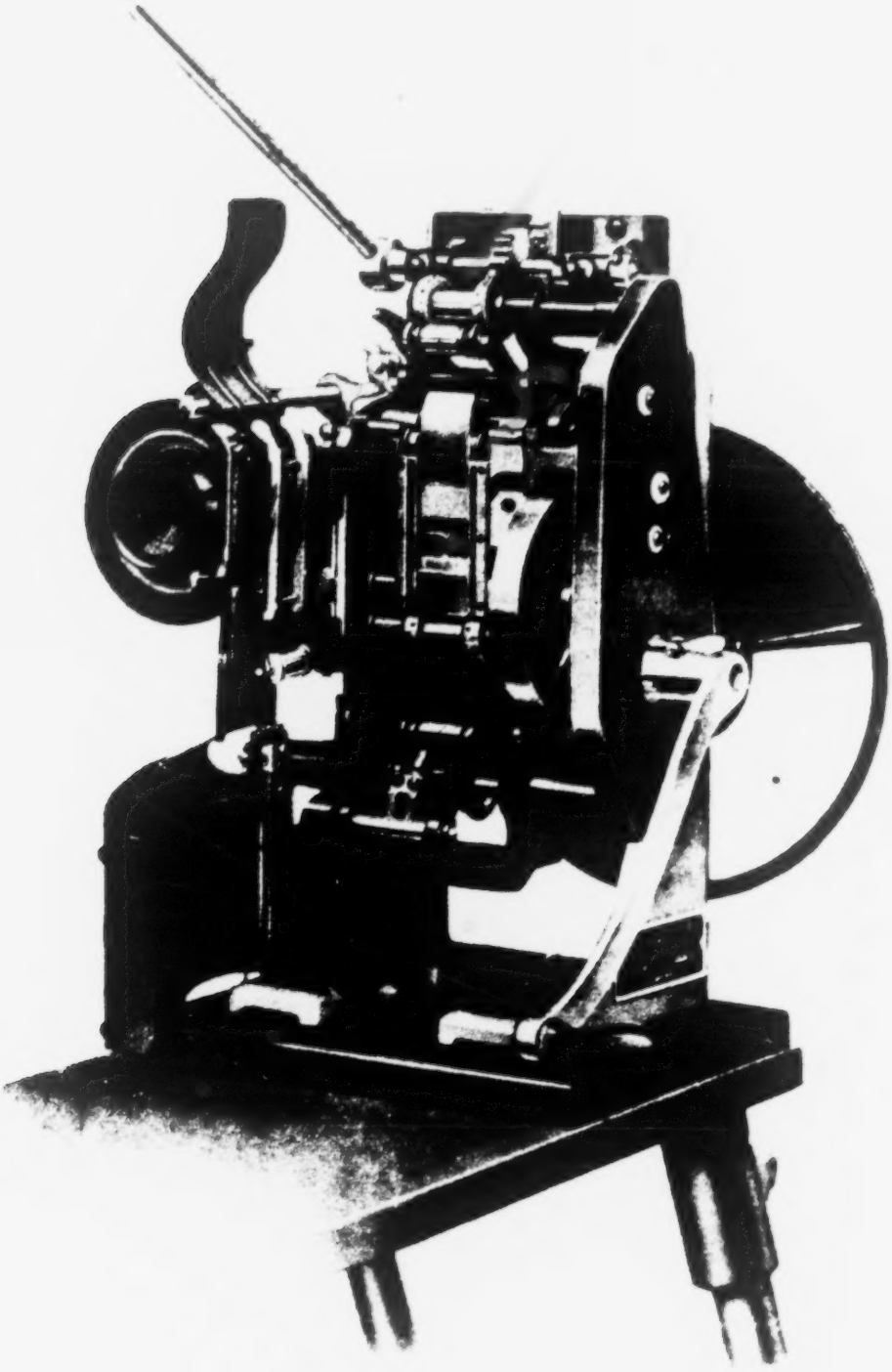

Edison Model "D" Mechanism

EDISON KINETOSCOPES

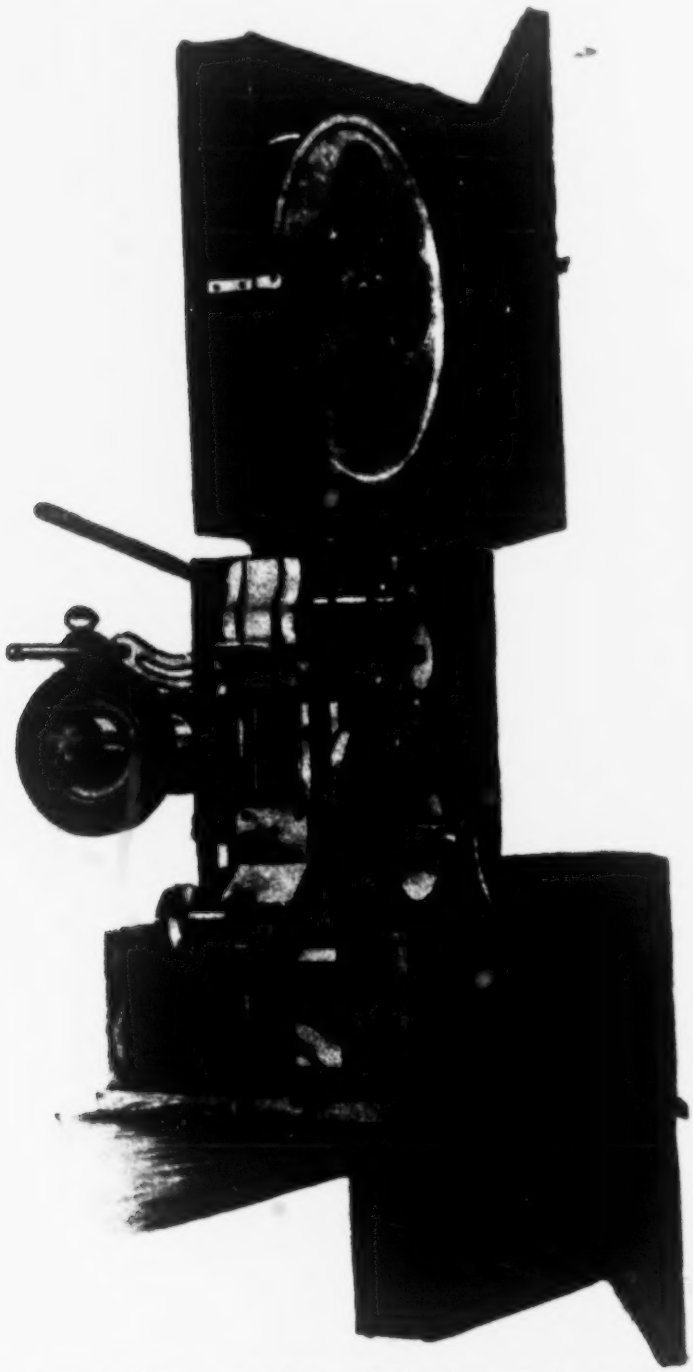

Mechanism of Edison Exhibition Model, with Automatic Shutter

Edison Mechanisms

The Model "D"

The heart of a projecting machine is its mechanism. Upon the design and construction of the mechanism depends the efficiency of the machine as a whole. Among all makes the Edison Model "D" mechanism is unquestionably the most ingenious, efficient and durable. It embodies the changes dictated by years of steady use and observation. It is made in the Edison Laboratory, famed the world over for the mechanical perfection of its products.

The intermittent movement is massive in construction. All parts upon which the grind is most severe, as for example, the cam and star wheel, are of unusual size, made of hardened and tempered tool steel and ground with faultless accuracy.

Where there is unusual strain or danger of excessive wear, hardened steel bearings are provided. These bearings are found on both ends of the cam shaft and star wheel shaft, on the mitre gear shaft on left frame side, on the external shutter shaft bracket and on the external shutter intermediate gear shaft.

The mitre gears, upon which the proper operation of the mechanism so largely depends, are case hardened and of unusual size.

The train of helical driving gears is covered with a steel-pressed guard, which keeps dust and dirt out of the teeth and protects the operator.

The three sprockets are made of polished steel, the upper and lower being flanged to prevent the film from running off. These steel sprockets are guaranteed to be absolutely accurate and mechanically perfect. All three sprockets are supplied with tension rollers of polished case-hardened steel in three parts—body and two ends, each revolving independently of the other, thereby providing tension where required and preventing any drag on the film. On the Edison mechanism, the only part of the film that comes in contact with the machine is the margin outside the picture. Consequently scratches cannot occur on the face of the film while it is passing over the sprockets.

A most important feature of the Edison mechanism is the system of oiling. Oil is fed to the outside shutter gears from a central point through a series of tubes. This system insures a constant feed and does away with the necessity of handling various sized oil cans to reach different parts of the mechanism. Oil cups are placed on the brackets supporting the revolving shutter and intermediate gear forming part of the shutter operation. A guard is placed over the train of gears driving the shutter to prevent oil from splashing on either lens or the film.

Although rugged in construction and designed for hard service, the Edison mechanism is simple and projects a wonderfully steady and brilliant picture.

It has no frills or superfluous parts. Every part in it is necessary and performs some important function.

The automatic shutter in the Edison mechanism is a distinct improvement and obviously more positive in its action than any of previous design. Under no possible conditions can the light be thrown upon the film except when it is passing through the mechanism above a certain speed. When the shutter is wide open it automatically locks. No power is required to keep it open. When the speed of the machine falls below a fixed point, the shutter automatically unlocks and closes. This shutter arrangement is one of the most ingenious mechanical devices of the present day.

The Edison Model "D" mechanism is equipped with an adjustable outside revolving shutter which reduces flicker to an absolute minimum, does away with halation and eliminates the streaked effect sometimes noticed. The shutter is always in proper position regardless of the framed position of the mechanism. The adjustable hub permits resetting at any time. A two-blade shutter is supplied for A. C. and a three-blade for D. C.

The chain take-up attachment, formerly supplied on special order only, now forms part of our standard equipment. It is a positive drive, operated from the take-up sprocket shaft to the gears attached to the lower magazine and provides an even tension. The belt drive take-up may be had as an option.

Upper and lower magazines of Russia iron, japanned, are supplied. They are made to contain reels up to twelve inches in diameter. The double aluminum rollers, between which the film passes, reduce the wear on the film and prevent any flame entering the magazines.

Protectors or guards are placed between the top of film gate and the rollers on upper magazine, and between the bottom of film gate and the base-board enclosing lower part of mechanism.

The mechanism support is of cast iron, nickeled and highly polished.

An improved crank, consisting of a spring catch which engages a groove in the driving gear hub and prevents slipping, is furnished with each Edison machine. On the Model "D" it is of polished nickel. It is supplied with either a 5" or a 7½" arm. The long arm adds to the easy operation and smooth running of the machine, and is usually preferred by operators.

The Exhibition Model

Although in many details the Exhibition Model mechanism resembles the Model "D," it is not quite so sturdily made. The principle of operating is substantially the same in both models.

The Exhibition type is equipped with triple steel sprocket gearing, the star wheel, cam, picture gauge, bearings, shafts, etc., are hardened, thereby reducing wear to a minimum.

DEFENDANTS' EXHIBIT NO. 11.

Edison Kinetoscope.

(Physical Exhibit.)

DEFENDANTS' EXHIBIT NO. 12.

Edison Kinetoscope.

(Physical Exhibit.)

DEFENDANTS' EXHIBIT NO. 13-A.

U.S. DISTRICT COURT,
W.D. PENN. 13 A

TACOMA WASH.
NEWS

JAN 26 1916

FOR 3,400 MILES HEAR "COMIN' THROUGH RYE"

Tacomans Listen to Singer in New York

By Transcontinental Telephone Audience Gets News Bulletins —Free Public Demonstrations Will Be Given Tonight.

Four hundred twenty-two Tacomans, employes of the Sunset Telephone company, and friends, were guests of the telephone company at a private demonstration of the operation of the Tacoma-New York long distance line at the Tacoma theater last night. Moving pictures illustrating development of the means of communication, reproduction of an address by Thomas Watson on his work with Alexander Bell in the development of the telephone, talks with New York by Mayor Fawcett and C. A. Fassett, former mayor of Spokane, and an instructive address by G. W. Peck of New York, were some of the features.

Guests of the company were ushered to seats in the theater the same as they would be at an ordinary performance. All that indicated anything unusual were the wires and two receivers attached to the backs of every seat.

Mayor Fawcett was called to the stage after Mr. Peck, in charge of the transcontinental demonstration, had established communication with New York, and 422 pairs of ears heard a lively transcontinental conversation on the weather and prohibition.

"How's the weather tonight?" asked Mayor Fawcett, and the audience heard the reply, 3,400 miles away, "Well, it is 40 above zero here now, mayor."

"It's colder than that here," replied the mayor. "You know it's been cold in Tacoma ever since the first of the year, when prohibition came in. We've only had 24 arrests compared with 127 last year, so you'll know it's pretty cold here."

C. A. Fassett, former mayor of Spokane, was called to the instrument on the stage and introduced as the "mayor of Spokane." He furnished considerable entertainment in an explanation to New York of the difference between "Fassett" and "Fawcett." He also explained to New York that he is now out of politics but said it was better to be a "has-been" than a "never-wasser."

Audience Hears Distinctly.

The conversations were heard much more distinctly than over some of the shorter lines out of Tacoma. The audience heard Mr. Wilmer in New York read selections from the New York evening papers and were treated to a number of musical selections over the wire. The notes of the singer, especially in "Comin' Through the Rye," were as clear and true as though she had been in the next room.

Next to the long distance demonstration, the moving picture and phonograph reproduction of the address by Thomas Watson on his work with Alexander Bell, was the marvel of the entertainment. As the pictures were thrown on the screen and Mr. Watson began to talk, the phonograph reproduced the words in perfect time with the motion of the lips on the screen. The effect was as if the voice came directly from the figure on the canvas.

Other Demonstrations Tonight.

Another film shows the various stages of development of the means of communication, beginning with the courier and signal fires. Mr. Peck explained the pictures and related interesting incidents in the progress of the telephone.

Free public demonstrations of the transcontinental service will be given at the theater tonight, Thursday and Friday nights, at 7:30, 8:30 and 9:30. Five hundred persons can be accommodated at each demonstration. Tonight the conversations with New York will be carried on by Mrs. J. G. Mason, President, George H. Stone of the Commercial Club and F. J. Frandell.

Yesterday was the first anniversary of the first transcontinental talk, San Francisco to New York.

DEFENDANTS' EXHIBIT NO. 13-B.

U. S. DISTRICT COURT
M. D. PENN.
13
EXHIBIT

SEATTLE STAR
FEB 1 1916
Date

SEATTLE AND NEW YORK HAVE CHAT BY LONG DISTANCE

President Suzzallo of University of Washington, One of Our Best Little Speakers, Tries to Get Tribute to Science to Prosaic Telephone Official 3,000 Miles Away, But the "T.-O." Insists on Talking About the Weather

By a Star Reporter

YOU won't believe a word of this, but it's true. It sounds crazy, but it isn't.

We sat in the Metropolitan theatre last night and talked with folks in New York. Yes, sir and ma'am, sat and chatted with them. Those New York people might have been in the same room with us, we could hear them that plain.

What's more, a lady in New York sang to us "Comin' Thru the Rye," and we heard the booming of the surf at Rockaway beach.

"It's easy to tell—easy as tiing my boy fairy stories.

"Once upon a time a little gi met an old witch, and the old witch said:

"'Hickory, hackeryfiddle and fume!
Come, little girl, t a ride on my broom!'

"The little girl straddled thbroom behind the old witch, and away they went. They flew and flewover mountains and plains, rivers and oceans. By and by the little gimaw, far below, an island in the sea.

"'What island is that?' shesked.

"'Why, thac,' said the old tch, 'is Japan.'"

My boy calls for that stuff.

But the older a fellow grow the more skeptical he becomes. That's why it may be hard for you to allow what I'm telling you about last night.

The Bell Telephone companya s inaugurated a commercial telephone service between Seattle nd New York, and last night's demonstration was in celebration of t achievement.

There were a couple of receivers attached to each seat.

First off, George W. Peck, who had charge of the installation of the system, gave an interesting lecture, with just enough statistics to amaze us.

Bell's Helper Is There

There are in the United States 9,000,000 telephones, and 21,000,000 miles of wire, and 9,000,000,000 telephone conversations were held last year.

There are 80,000 hello girls.

Then Watson, who helped Alexander Graham Bell invent the tele-

phone, appeared on a moving picture screen—a fine, white-haired old man in a dress suit—and read from a manuscript, and Watson's voice issued from an unseen phonograph. He told us Bell and he worked and worked to perfect the telephone.

Show Moving Pictures

It was uncanny. We saw the old man's lips move. We heard his voice.

When Watson paused, the phonograph paused.

We saw moving pictures of the fleet runners of ancient days, bearing messages; of aborigines sending smoke signals; of the "pony express"; of stage coaches and sailing ships.

Then we saw movies of a busy Seattle business man at the telephone. He wanted to talk with a busy New York business man. We saw the connection made. We saw the New York man take down the receiver. We saw more than 3,000 miles annihilated. Seattle and New York were face to face, talking business!

Then the people in the audience were told to place the receivers to their ears. A young man in New York greeted us genially.

Tells Us About Weather

"Perhaps," said he, "you would like to know what people in New York are talking about. The weather—" He discussed the weather.

He picked up an afternoon newspaper and read European war news, Mexico news, New York [illegible] news.

"Would you like to hear music?"

We would. It seemed the songstress must be on the stage. We looked.

She was not there. She was in New York—more than 3,000 miles away.

Suzzallo on Stage

President Suzzallo of the University of Washington appeared on the stage. We glued the receivers to our ears. He was introduced to a telephone official in New York.

Ordinarily it is bad manners to cut in on somebody else's telephone conversation, but it was all right this time.

Dr. Suzzallo whispered into the instrument. His voice and that of the New York man boomed in our ears. The conversation could not have been more casual if the two men had been introduced in the lobby of the Washington hotel.

"It gives me great pleasure, Mr. Wilmer, to introduce to you Dr. Henry Suzzallo, president of the University of Washington," called Mr. Peck to New York.

Talks to New York Man

"All right, go ahead," came the voice from New York.

"I'm very glad to make your acquaintance, Mr. Wilmer," answered Dr. Suzzallo. "It gives me great pleasure to send greetings from Seattle to New York for the first time by telephone."

"How's the weather out there?" came the voice from New York.

"This linking of science—"

"It's about 55 here in New York."

The Doctor Is Frettish

"This linking of science—WELL IT'S COLDER THAN THAT HERE," exclaimed the doctor, who had to abandon the attempt at speech making. "We're having temporarily the kind of weather you generally have in New York."

"It's not bad here."

"But it usually is. I lived there 14 years, so you can't fool me—"

"I should think it would be colder out there in Seattle—"

"Mr. Wilmer," pleaded the president. "Do you know that you are talking into the ear of the Orient and Alaska?"

"Am I—?"

"Yes, I do not doubt but that the telephone will cross to Siberia and connect New York with that vast land—"

Cuts Him Right Off

"No, neither would I."

"This conquering of space by science—"

"Well, goodbye, Seattle—"

"This conquering—"

Click!

It was over.

The demonstrations will be repeated tonight and tomorrow night. The public is admitted free.

There will be three demonstrations each evening, the first at 7:30, the second at 8:30 and the last at 9:30.

It costs $19.35 for the first minute's conversation between Seattle and New York; $20 for two minutes; $20.65 for three minutes, and $6.65 for each additional minute.

DEFENDANTS' EXHIBIT NO. 13-C.

Clipping From
[illegible] Times

Feb 13-1916

Date

1,500 EAVESDROP AS SEATTLE TALKS TO NEW YORK

Dr. Henry Suzzallo Converses With Officials of Telephone and Telegraph Company in Demonstration.

Fifteen hundred people last night "listened in" while telephone communication between Seattle and New York was conducted from the Metropolitan Theatre, Dr. Henry Suzzallo, president of the University of Washington, and Mrs. C. E. Bogardus conducting the conversation from the Seattle end, and Mr. Wilmer, an official of the American Telephone & Telegraph Company, speaking from New York.

By receivers "cut in" on the main line, the audience was able to listen to everything that was said. The conversation, however, was mostly about weather conditions.

An official at New York read the latest news from the latest edition of a New York newspaper for the benefit of those at the theatre and later reproduced a popular song on a phonograph playing in his office.

An interesting lecture was given by George W. Peck, one of the chiefs of the construction division of the company. Several motion pictures were shown, but the most striking feat in this line was the synchronization of the human voice with the movement of the pictures. While the film showed Thomas A. Watson, the first man who ever heard the human voice over a telephone wire, tell of his experiences with Prof. Alexander Graham Bell, the inventor of the instrument, a phonograph reproduced his words.

The demonstrations will be repeated tonight and tomorrow night at 7:30, 8:30 and 9:30 on each evening.

SEATTLE TIMES

Feb 2-1916
Date

FEB 2 1916

TALK TO NEW YORK NOT INTERRUPTED BY STORMS

Five Hundred Persons in Metropolitan Hear Joseph Blethen Chaff Telephone Official 3,000 Miles Away.

Five hundred persons seated in the Metropolitan Theatre last night heard Joseph Blethen, president and manager of The Times, "long distance" A. B. Wilmer, an official of the American Telephone & Telegraph Co., at New York, and ask him to have the bartender of a certain club rattle a little ice in a shaker.

The occasion was a demonstration made by the telephone Company to show that, notwithstanding the severity of the weather in the intermountain and coast states, telephone service with the Eastern metropolis was uninterrupted. The audience were able to "listen in" through receivers attached to their seats.

Mr. Blethen later called Paul West through another instrument. West was unable to come down to the telephone company's New York office, to use the high-power transmitter, and talked from his home, 317 West End Avenue, through an ordinary phone. Mr. Blethen declared he was able to recognize West's voice, and particularly his laugh. Later Mrs. West was called to the instrument, and she asked to be allowed to talk to Mrs. Blethen. Mrs. Blethen was in the theatre but did not talk.

Woman Has Her Say.

Miss Jane West then took up the conversation and introduced a couple of her friends to Mr. Blethen over the telephone. West again came to the instrument, and he and Mr. Blethen compared watches. There was exactly three hours' difference in the time. The conversation, Mr. Blethen said, was in every way as distinct as though West had been in an office in Seattle.

West is a writer of note and was for many years editor of the New York World's colored section. He has written a number of stories and several comic operas, and just now is writing and producing in the moving picture field. Mr. and Mrs. Blethen have known the Wests for many years, and Mr. West was Mr. Blethen's choice when the telephone company offered to connect him with any person in New York.

The audience had a good deal of fun when Mr. Blethen was talking to Mr. Wilmer. Like every good American, Wilmer began to brag about his own city. He told about the big buildings, the tremendous population, the bank totals, the way business is booming, and had begun tell about breaking all records for something when Mr. Blethen interrupted.

Regular New Yorker.

"That's the same old line of talk that I always hear in New York," he said. "If there was any doubt about you being in little old Manhattan your conversation has dispelled it."

A hearty laugh came over the wire. Then Mr. Blethen began to tell the New York man something about Seattle—just a few things. If he hadn't been interrupted he might have had New York looking like a village. Wilmer headed him off, however, by saying that he hoped to visit Seattle some day.

Mr. Blethen informed him that he would be more than welcome. He then asked him to call up a certain club and have the bartender rattle a little ice in the shaker.

No Bartenders Around.

"I'm sorry I can't do it," Mr. Wilmer replied. "I am alone here."

"Alone? What's become of all that tremendous population you were just telling me about."

"I mean I'm alone in the office."

Mr. Blethen then informed Mr. Wilmer that this state had gone dry and there doubtless were many people listening in who would like to hear the old familiar sound of ice in a cocktail shaker. He then informed him that the audience was satisfied he was talking from New York; that he was pleased to have had this little chat with him; glad that he didn't have to pay for it, and wished him good night.

Later in the evening at other demonstrations A. L. Valentine superintendent of public utilities, and J. F. Douglas, manager of the Metropolitan Building Company, held conversations with New York.

Illustrated Lecture.

George W. Peck of the engineering department of the telephone company, gave an interesting lecture illustrated with motion pictures and slides, the most remarkable film being one of Thomas A. Watson, the man who heard the first message ever sent over a telephone, tell of his experiences with Alexander Graham Bell, the inventor of the instrument. While he talked a phonograph repeated his speech in perfect synchronization.

Further demonstrations will be made this evening, beginning at 7:30, 8:30 and 9:30, when H. W. Foulton, president of the Rotary Club; Scot. C. Bone, editor of The Post-Intelligencer, and Robert Boynes, president of the Commercial Club, will talk with persons in New York. The public is invited.

DEFENDANTS' EXHIBIT NO. 13-E.

U. S. DISTRICT COURT
M. D. PENN.
DEFT. EX. 13 E

Edison A

Wash

POST-INTELLIGENCER, SEATTLE, FEBRUARY 1, 1916

13 E

SEATTLE TALKS WITH NEW YORK OVER TELEPHONE

Persons in Theater Here Converse With Official in Bell Company's Eastern Office.

WORDS CARRY CLEARLY.

Five Hundred Instruments Permit Audience to "Listen in" and Free Demonstrations Will Be Repeated Tonight and Tomorrow Night.

Seattle and New York—separated by thousands of miles of rugged mountains, blizzard-whipped plains and mighty, rushing waters—were linked by telephone last night for the first time.

The bond was no more than a mere thread of copper—a thread that started in the big offices of the Bell Telephone Company in New York; stretched its sinuous length westward, over the Alleghanies and the rolling hills of Ohio and Indiana to Chicago; thence onward across the snowy wastes of plains to the Rocky mountains, through their tortuous canyons and across bleak deserts to San Francisco; thence northward along the Coast, ending in the Metropolitan theater at Seattle.

The furies of the elements in a dozen states assailed it. A sleet storm in the Alleghanies sought to break down its slender strength, while farther eastward a blizzard launched itself against the tiny thread as if to tear it from its poles. A blinding snow storm in the Rockies strained its weight against the thread, but the thread held—the full length of its 4,000 miles.

It held, and by faithfully carrying back and forth between Puget sound and the Atlantic seaboard the voice impulses, fulfilled the confidence that had been placed in it and made history.

No Difficulty in Communication.

New York spoke to Seattle and Seattle spoke to New York as easily as a capitol hill would speak to Queen anne hill—by telephone.

First Seattle Woman To Talk to New York.

Mrs. C. E. Bogardus.

As clearly as if the speakers were in adjoining rooms speaking over the shortest of telephone circuits, instead of the longest, the impulses of the intonations were sent back and forth over the wire. The speaker in New York told of the weather there, read the headlines of the latest editions of the newspapers, played a phonograph and carried on a brisk conversation with the listeners in Seattle.

Fully 2,000 persons were present at the demonstrations last night at 7:30 8:30 and 9:30 o'clock.

To President Suzzallo, of the University of Washington, was accorded the honor of speaking the first official message to New York, while Mrs. C. E. Bogardus was permitted the distinction of being the first woman to talk with the Eastern metropolis. Both spoke for several minutes, while the theater filled with listeners heard the ready replies of the man in New York—Mr. Wilmer, an official of the telephone company.

President Suzzallo spoke of the marvelous achievement that had been accomplished by the telephone and of the wonderful step of progress it marked. He also assured the New York man that Seattle was experiencing regular New York weather. The New York man then answered with pride that it was but 54 degrees above zero in the Eastern city at that time.

Hopes to Visit Seattle.

Mrs. Bogardus impressed the New York man with the natural advantages and progressive ideals of Seattle. And the New York man said that he had never been this far West, but hoped to visit here soon.

From the pitch of the Seattle speakers' voices the listeners were impressed with one thing—that it is no more difficult to talk to New York than to Georgetown.

The demonstrations begin with moving pictures. Thomas A. Watson friend of Dr. Alexander Graham Bell inventor of the telephone, is shown in an illustrated lecture on the history of the instrument. The pictures are operated with an Edison kinetophone, by which the words of the speaker are heard as they are formed with his lips. Both the moving picture projector and the phonograph were synchronized perfectly.

The route of the transcontinental line is shown, as it winds through valley, over hill and across wastes of sagebrush desert. George W. Peck, of the engineering department of the Pacific Telephone & Telegraph company, gave a short lecture on the building of the line. And when the line was finally traced to Seattle, the interest was climaxed by the actual operation of the system—the voice of a man more than 4,000 miles away, saying: "Hello, Seattle! This is New York."

Speeds Across Continent.

"It takes one-fifteenth of a second for the voice to travel the wire from here to New York," said Mr. Peck in his lecture. "If you could shout loud enough to be heard in New York, it would require four hours for the sound of your voice to reach there."

Telephone service between San Francisco and Portland and New York has proved popular, said C. O. Meyers, manager here for the Pacific Telephone & Telegraph company. Mr. Meyers believes the Seattle-New York service will prove as popular. Frequently, he points out, persons in Seattle have had occasion to talk with friends in New York when a telephone would be far more advantageous than telegraph.

The demonstrations will be repeated tonight and tomorrow night at the Metropolitan theater at 7:30, 8:30 and 9:30 o'clock. The demonstrations are free. Five hundred telephones are distributed through the theater, so the audience may "listen in."

Munsey's Magazine
March 1913
U. S. DISTRICT COURT
M. D. PENN.
DEFT. EX. 13 F
Def Exh 13 F

THE COMING OF THE TALKING PICTURE

THE INTERESTING POSSIBILITIES OF EDISON'S NEWLY ANNOUNCED INVENTION, THE KINETOPHONE

BY ISAAC F. MARCOSSON

THE scores of smartly gowned women, the troops of children, and the fair sprinkling of men who gathered at the Orange Country Club one afternoon late in January scarcely realized the historic importance of the occasion that brought them together. They had been asked to be the guests of their neighbor, Thomas A. Edison, at a demonstration of what was modestly called "an improvement in the motion picture." To most of them, the term "motion picture" meant the ordinary "movie," with its silent unfolding of the drama of life.

Nor was there any outward evidence of significant departure when the lights were turned down. Before the audience stood the familiar screen, and behind it, on an improvised elevation, the nose of a projecting-machine poked out. But if any one had looked up, he would have seen two wires running along the ceiling and connecting the picture-machine with the screen. These wires had an important part in the day's disclosures.

The buzz of talk continued even after the machine began its preliminary sputtering. A conventional drawing-room interior, containing a piano, was thrown on the screen. A man in evening clothes walked swiftly down toward the center of the pictured stage. He raised his hands, and then the miracle happened. He framed his lips to speak, and, even as he framed them, the sound of his voice came forth. By watching the lips carefully, you could tell that the words you heard were in reality the speech he was uttering. There was perfect unison between sound and action.

Then he introduced a girl, who played "Annie Laurie" on the violin. She was followed by a woman, who sang "The Last Rose of Summer." Both were accompanied by a man at the piano, and again the unison of sound and motion was perfect.

The lecturer dropped a china plate on the floor. You heard not only the initial crash, but the lesser noise of the flying fragments. A bugler came on and sounded the reveille; there was the screech of a whistle; and, to end the amazing performance, some dogs were led on, and their barks were clearly heard as they scampered around the stage.

Other demonstrations followed. You saw and heard part of an act of "The Chimes of Normandy"; you beheld the story of a Dick Turpin spoken and acted in every detail; you laughed at the drollery of a politician trying to make a speech to his constituents while being coached from behind; you heard Verdi's "Miserere"; you got the opening of a minstrel-show, bones, blackface, jokes, and all.

When the display closed with the usual "grand finale by the entire company," which included the singing of the "Star-Spangled Banner," it was so real, so vivid, and so stirring that the audience rose to its feet. It was a spontaneous tribute to the actuality of an event that had a genuine scientific importance.

What had happened was simply this—the talking motion picture had had its first public appearance. By a curious coincidence, the audience was largely composed of the friends of the little gray wizard who had now finally realized a dream of many years by linking two marvels of his genius—the phonograph and the motion picture.

The "movie" had received its full brother in the "talkie," and a new era had begun in the progress of one of the most amazing of modern amusement enterprises.

THE MYSTERY OF SYNCHRONISM

Of course, the idea of the talking motion picture is not a new one. Mr. Edison has told me himself that he has labored on it for more than thirty years. Just as soon as it was possible to project the animated photograph upon a screen, the mind of man leaped to the possibility of synchronizing it with spoken words; but the secret long remained a baffling mystery.

Many people have struggled with the problem. The obvious plan was to get a good phonograph record and then adapt the moving picture to it, or *vice versa*.

This seemed very plausible. There was nothing, apparently, in the way of getting a record of Caruso singing "Pagliacci," and then having a motion picture made of an actor dressed as the great tenor in the act of singing. Then all that seemed necessary was to release both of these at the same time. But the experiment always went wrong, because either the phonograph got ahead of the picture or the film ran away from the music, and the procedure became ridiculous.

I have cited the simplest plan, but many men of science have labored hard and long on much more elaborate devices, and have failed. They failed because there was no synchronism in the making of the two records. In other words, they found that the union must begin at the start of the project, and this was too much for them.

Edison has succeeded, after years of experimenting, because he has achieved a synchronizing device—a marvel of mechanical ingenuity—which records sound and action simultaneously, and then reproduces it precisely as taken. The whole apparatus, which combines the motion picture with the phonograph, is called the kinetophone.

In order to get some idea of the difficulties that lay in the way of complete synchronization, and incidentally to make some adequate measure of Mr. Edison's achievement, let us see just how the ordinary phonographic record is made.

When Caruso or Harry Lauder makes a record, he stands directly in front of the receiving-horn, and within a foot of it. When orchestras make records, horns are attached to all the instruments. It has always been well-nigh impossible to get a good record of a sound produced at any considerable distance from the horn.

Fancy, then, the problem that confronted Mr. Edison when he dreamed of reproducing opera and the drama. In the action of the play or the opera, the actors and singers have to move about, singing or talking as they go. Sometimes they are in the center of the stage; sometimes at the side; frequently they are on a balcony or a high rock.

The task, therefore, was to get a phonographic recorder which would not show in the picture, and yet which would be of sufficient delicacy to catch the minutest sound-waves—whether of speech or of music—at a distance of forty feet. Through years of patient research Mr. Edison has perfected such a recorder, and it makes possible the kinetophone.

HOW TALKING PICTURES ARE MADE

Most people know how the ordinary motion picture is taken, either in a studio specially built for the purpose, or out in the open. The spectacle of men and women "made up" for stage parts riding or driving or figuring in various stirring events on the public highways is familiar to those who live in communities which house motion-picture concerns.

The operator's chief task is to get his scene within the focus. Then he begins to grind away at his crank, and foot after foot of film is exposed. The question of sound does not enter into the performance. The characters speak, but all that the spectator gets of the speech, when he sees the film run off, is the motion of the lips. If he is a good lip-reader, he can sometimes follow the dialogue. But he depends upon the action to tell the story.

But with the making of the talking motion picture it is different. Sounds enter very largely into the business. A receiving-horn attached to the delicate recorder is placed alongside, and is connected with the camera. The operator turns the crank, and the picture and record begin. Frequently a good many feet of film are reeled off before there is any definite sound-wave to be registered. All this is automatically adjusted.

In making a talking picture, the actor or singer moves about just as if he or she were on the real stage. Every word, every action—even the slightest footfalls—are recorded

simultaneously. The action is taken at the usual rate of sixteen pictures a second, and is on the ordinary celluloid film, from which the finished positives are printed.

The sound is recorded on soft wax cylinders, resembling in shape the early phonographic records. They are nearly a foot in length and four or five inches in diameter. From this soft "master" record the indestructible records of commerce are made. Mr. Edison told me that these duplicates, in time, could be made for a dollar apiece.

At this point the question naturally arises, what sets the pace—the action or the sound? In the case of the kinetophone, the film goes at a pace dictated or set by the phonograph. The speech has the right of way, and the picture must follow. In this way perfect accord is secured and there can be no runaway dialogue.

A MARVELOUSLY SENSITIVE RECORDER

So sensitive is the recorder to the waves of sound, even at a distance of forty feet, that in addition to perfect synchronization a remarkable illusion is also created. When the actors, for example, are "up stage," as the technical phrase goes, and walk "down stage" toward the audience, their voices increase in volume as their photographic figures grow in size. In the same way, if the actor or singer is at the right of the stage, the voice seems to come from that side, and so on.

The sensitiveness of the recorder has led to some amusing episodes. A year ago, when the apparatus was practically as well developed as it is to-day, some of Mr. Edison's representatives were making a picture at a studio on Forty-Third Street, in New York. It was in midsummer, and the windows were open. The drama being pictured and recorded was full of poetry and sentiment. In it a young man made the usual confession of love, amid all the charm of rural environment. You could hear the musical purl of a woodland brook, and the breath of the wind murmuring in the leaves.

It happened that just as the hero was in the most engrossing portion of his declaration, the hour of noon arrived, and with it a great factory whistle in a near-by building let go with a terrific screech. Of course, the operators and actors, used to such sounds, paid no attention to it; but when the record was reproduced for the first time, the young swain's love-story was rudely punctuated by the prosaic din of the whistle.

In the early days of experimenting with the kinetophone at West Orange, too, the whistles of passing locomotives, and even the raucous honks of speeding motor-cars, were heard in the records. Such incidents led to the adoption of rigid precautions against outside noises.

The reproduction of the talking motion picture seems to be a comparatively simple matter. A horn attached to the phonographic record is placed behind the screen. It is connected by wires with the projecting-machine back in the gallery of the theater or the hall. The machine operator can regulate the phonograph from his station. Once released, it sets the pace for the film; and, the synchronization now established, the machine controls the operator. He can turn his back to the picture while operating the machine and the record.

You have now seen in a general way how the kinetophone operates and what it does. What are its possibilities?

POSSIBILITIES OF THE KINETOPHONE

It has, of course, not reached any final development. Mr. Edison says that he is still perfecting it. For one thing, the metallic sound which now accompanies the reproduction of voices is being gradually eliminated.

That it has already reached the commercial stage is attested by the fact that the inventor has signed one of the largest contracts yet made in the amusement world for the appearance of the machine in vaudeville. By the time this article appears, if you live in New York or any of the larger cities, you will probably have seen some of the kinetophone pictures. It will only be a short step from these higher-priced houses to the cheaper theaters; and when the new invention reaches the real home of the "movie," one of Mr. Edison's ambitions will be realized, for he wants the common people to get the benefit of this union of sight and sound.

Up to the present time, the kinetophone pictures have been concerned with short dramas and musical selections. Those already made range from the first act of "Faust" to the quarrel scene between *Cassius* and *Brutus* in "Julius Cæsar." You can hear part of "The Chimes of Normandy" and extracts from "Il Trova-

tore." The kinetophone also encompasses what is known as the popular "picture story," which has become familiar to the five or six millions of people who each day attend motion-picture shows in the United States.

But the amusement feature which now constitutes the sole activity of the kinetophone is in reality only part of its purpose. It will undoubtedly prove to possess a larger and more permanent value.

Most people will agree that the ordinary motion picture has become well-nigh indispensable in education and science; in preserving the march of historic and significant event, and in advancing the whole social uplift. How much more effective will all this be when sound becomes part of the reproduction? Pictures of the great battles of the future will reverberate with the roar of guns. Views of coronations and inaugurations will resound with the huzzas of crowds and the crash of music. The stage of the Metropolitan Opera House may be peopled with stars long since dead, but whose voices and acting will still bring thrills.

Fancy the precious heritage of posterity if the kinetophone had been in use at Washington's farewell, at the charge of the French guard at Waterloo, or when Edwin Booth was playing "Hamlet"!

A TALK WITH EDISON

The visible evidences of the use of the kinetophone, together with the almost thrilling vista of its possibilities, needed the spoken authority of the man behind the machine. So I went to West Orange—a place familiar to the historian of scientific progress—to talk to the veteran inventor who by this latest expression of his genius had in reality become a wizard of sight and sound.

I waited for him in that combination library and office which is part of the setting of electrical history. It is big, spacious, and seasoned, with an atmosphere of Edison achievement about it. For here is assembled part of the world-wide tribute, in bronze, marble, and print, to that marvelous brain-product on which the sun never sets.

There were the old roll-top desk littered high with papers, and the big easy chair in which he had dreamed the dreams that had been translated into a far-reaching human service. In a space between stacks of book-shelves you saw, half hidden in the shadows, the plain army cot, with its blankets still tousled, on which he had just snatched a few hours' sleep after a night dedicated to work.

The door opened, revealing the shy, modest, almost shrinking figure of Edison. So unobtrusive was his manner that he might have been a humble subordinate carrying a message to his chief. If it had been summer, he would have had on the famous white suit; but it was winter, and he wore an old, wrinkled suit of gray clothes. His collar was wide at the throat, and the well-known white string tie was twisted into a shapeless knot. A grayish felt hat, its band stained with perspiration, was jammed down over his forehead.

It was the same dreamy-eyed Edison as of old, careless of personal appearance, moving, walking, talking like a man rapt in a mighty vision. In his patient, kindly countenance was the glamour of an understanding that somehow made you think of one of the prophets and seers of other days. To come into his presence is to get an unforgetable impression of simple, unaffected greatness.

He sank into the big chair, and seemed, for a moment, to literally fold himself up physically and meditatively. I asked him about the kinetophone, and he began to talk in a low, even, well-modulated voice.

"The kinetophone," he said, "or rather the synchronization of sight and sound, is an old idea of mine that has finally been realized. In one way or another it had been in mind for more than thirty years. Back in the late seventies, when I invented the phonograph, it was stirring, and in 1887, when I was able to perfect the motion-picture camera, that idea of a combination of sight and sound persisted. Some of my earliest experiments in sound included an attempt to work it out.

"The problem of actual synchronization was the least difficult of my tasks. The hardest job was to make a phonographic recorder which would be sensitive to sound a considerable distance away, and which would not show within the range of the lens. You get some idea of the difficulty when I make this comparison—if you estimate the volume of sound at a distance of one foot from the recorder at one hundred, you find that at a distance of two feet it diminishes to twenty-five. The difficulty has now been overcome, although I expect

to make my recorder much more effective than it is at present."

MUSIC FOR THE "FIVE-CENT FELLOW"

"What do you regard as the largest use for the kinetophone?" I asked.

"I believe," replied Mr. Edison, "that its greatest use, for the present and for a considerable time to come, will be for music. By this I mean opera, musical plays, and kindred entertainment. I have always wanted to bring the great music of the world within the range of the people. I am interested in the man I call the five-cent fellow. I want him to be able to go to his regular motion-picture house, and for five cents hear the great artists and the immortal music that for years have been denied to him. Thus we can reduce the high cost of amusement, if we cannot put down the high cost of living.

"Of course, as you have seen, the kinetophone is and will continue to be more and more effective in the interpretation of the shorter and more intimate plays. I do not think that it will be used, for some time at least, for long, sustained dramas."

At this point there arose the very pertinent question as to the effect of the talking motion picture upon the now securely established silent "movie."

"The talking motion picture will not supplant the regular silent motion picture," said Mr. Edison. "Each has its distinct use. In the first place, there is such a tremendous investment in the pantomime pictures that it would be absurd to disturb it. I have in mind a development of the kinetophone which will enable us to put out an attachment for synchronization which may be placed on the regular machines. Thus the theater can provide both kinds of motion pictures."

As a matter of fact, the only kind of amusement which seems to be in jeopardy as a result of the introduction of the kinetophone is the cheap vaudeville. The elimination of most of this will be a benefit, instead of a loss.

The kinetophone has been perfected to its present stage for at least three years, and it would have been easily possible for the inventor to announce and produce the talking motion pictures a year ago; but he has made it a practise not to release his inventions until he is sure of them.

"You know," he said to me before I left, "I am not really a man of science. I am simply a commercial inventor, and the things I do must be commercially right."

Whatever may be the final service of the kinetophone, the salient fact that its coming emphasizes is that at last we have a scientific synchronization of sight and sound. Its pure amusement aspect must be subordinated to its possibilities — as yet, of course, undeveloped—of practical and useful work in many other fields.

A PLEA FOR PEACE

CEASE your devil's fighting—'tis shame that it should be
With human against human, and the graves across the sea!
We educate our children, we cultivate their brains,
But war for added empire, and think only of the gains.
The voice is faint from out the vast and seething multitude
To stay the brutal cannon, to appease the murderous feud;
The lust of battle's in our hearts, and blood is on our hands—
We fight like fiends incarnate, like primeval savage bands.
The breaking hearts of mothers and their cry of sore distress
Are known, but all unheeded—what matters one life less?

"His life I'll give, but not his death!" declares our motherhood;
"His country cannot use a corpse to serve the public good!
My son's brain, brawn, and muscle he offers as his dower;
The mighty force of intellect shall be our nation's power.
His bright, red blood shall daily give its living, surging force—
Not spilled upon the earth with death and sorrow in its course.
Let judges, mighty judges, with wisdom calm and cool,
Decide the weighty question, the vital one of rule!"

Jane Cass Al Sousa

DEFENDANTS' EXHIBIT NO. 14.

MEMORANDUM OF AGREEMENT made this first day of June, 1918 by and between THOMAS A. EDISON, INCORPORATED, a New Jersey Corporation, of West Orange, New Jersey, hereinafter called the Lessor, and AMERICAN TELEPHONE AND TELEGRAPH COMPANY, of 195 Broadway, New York, N. Y., hereinafter called the Lessee, WITNESSETH:

WHEREAS, the Lessor is the owner of a certain complete Kinetophone outfit including a kinetophonograph (Mfr's. Serial No. P9), synchronizer (Mfr's. Serial No. K32), kinetoscope (Mfr.'s Serial No. 4247), and certain accessories, and

WHEREAS, the Lessee desires to lease from the Lessor said Kinetophone outfit, subject to the terms and conditions hereof;

NOW, THEREFORE, the parties hereto have agreed and do hereby agree as follows:

1. The Lessor hereby leases to the Lessee, subject to the terms and conditions hereof, said complete Kinetophone outfit for a period of ten years from the date hereof, and agrees to deliver the same f. o. b. Orange to the Lessor upon demand. The Lessee agrees to pay as rental for said Kinetophone outfit the sum of Five Hundred Dollars ($500), payable upon the execution of this agreement.

2. The Lessee agrees to use said Kinetophone outfit only in the United States and Canada and only for the purpose of exhibiting for advertising purposes the Lessee's special talking picture entitled "The Birth of

the Telephone", or such other talking pictures as the Lessee may, with the approval of the Lessor, make or cause to be made for advertising purposes.

3. It is understood and agreed that the ownership of said Kinetophone outfit and every part thereof and all title, both legal and equitable, shall remain in the Lessor, and that the Lessee shall not encumber nor permit the same to become encumbered or subject to any lien, and that the Lessee will not sell nor offer the same for sale nor make any lease or disposition thereof inconsistent with the ownership of the Lessor or the terms of this agreement. The Lessee shall maintain said Kinetophone outfit in repair at its own expense so long as the Lessee shall continue to use the same, and further agrees not to remove or deface any of the nameplates of said outfit. The Lessee agrees that upon the termination of this lease, it will, upon the demand of the Lessor, deliver to the Lessor f. o. b. Orange, N. J. said Kinetophone outfit and all parts thereof in good order and condition (reasonable wear and tear excepted), all transportation charges prepaid, except in case of the complete loss or destruction of said outfit, or damage thereto to such an extent as to render the same unusable.

In case of the complete loss or destruction of said Kinetophone outfit, the Lessee shall forthwith furnish the Lessor with proof of such loss or complete destruction. In case of partial damage so as to render the outfit unusable, the Lessee shall forthwith return to the Lessor said damaged outfit and all parts thereof f. o. b. Orange, N. J., all transportation charges prepaid. The complete loss or destruction of said Kinetophone outfit, or its damage so as to render it unusable shall not entitle the Lessee to a refund of the rental or any part thereof.

4. It is further understood and agreed that neither this agreement nor the right to use said Kinetophone outfit shall be assigned or otherwise transferred, except with the written consent of the Lessor.

IN WITNESS WHEREOF, the parties hereto have executed this agreement the day and year first above written.

THOMAS A. EDISON, INCORPORATED
By C. H. WILSON,
Vice Pres. & Genl Mgr.

AMERICAN TELEPHONE AND TELEGRAPH COMPANY
By N. C. KINGSBURY

EQUIPMENT OF KINETOPHONE FOR A. T. & T. CO.

1 Kinetoscope table and legs
1 Phono. horn and case
1 Kineto phonograph # P9
2—3 Wing shutters
1—2 " "
1 Special Edison Rheostat 110 Volt.
1 Edison Grid Type Transformer 110 Volt 60 C
1 Cut-out Switch and Box
1 Synchranizer K 32
1 Mechanism "D" Serial 4247 License K 525
1 Lamp house
1 Arch lamp
1 set floor sockets
1 Lower magazine
1 Upper Magazine
3 11" reels
1 Table Switch box and switch with asbestos leads

1 crank
1 Steroptican casting
3 Stereo brackets (1 short and 2 long)
3 Condensors
1 Synchranizer—Main Shaft
2 Kineto Shutter Shafts and Gears (short)
2 " " " " " (long)
1 Intermittant Sprocket—shaft and star
1 Small worm shaft and gears (Synch)
1 Aperture Plate
1—5443
2—18691
1 Box assorted screws
1—5170
2 Phono-Feed nuts and springs
1 gov. shaft
6 19204
1 Box Miscellaneous extras
4 Brakes for Synchranizer
2 Reproducer Weights
1 Motor 110 Volt 60 C. A. C.
1 Motor 220 Volt 60 C. A. C.
1 Motor 220 V. D. C.
1 Motor 110 Volt D. C.
1 framing rod
1 Phono belts
1 Horn crane
2 Synchranizer chains
1 Slide carrier
2 Phono. governor brackets and governor complete
2 Feed Screws and gears 5207
12 Diaphragms
100 Pulleys
1—18" Stereo. Lens, Quarter Size
1—25" " " " "

1—14″ Stereo. Lens, Quarter Size
1—16″ " " " "
1—19″ " " " "
1—28″ " " " "
1—30″ " " " "
1—34″ in Half Size
1—23″ in Quarter Size
1—22″ in " "
1—Extension tube
1 2¼″ Motion Picture tube
1 8½″ " " "
1 3⅝″ " " "
1 4½″ " " "
1 9½″ " " "
1 2½″ " " "
4 Trunks
1 Fibre Case

RECEIVED this day of 191 from Thomas A. Edison, Incorporated one complete Kinetophone outfit and accessories as listed above, the same being as agreed to be delivered under contract dated June 1, 1918 between Thomas A. Edison, Incorporated and American Telephone & Telegraph Company.

AMERICAN TELEPHONE & TELEGRAPH COMPANY

By .....

DEFENDANTS' EXHIBIT NO. 15.

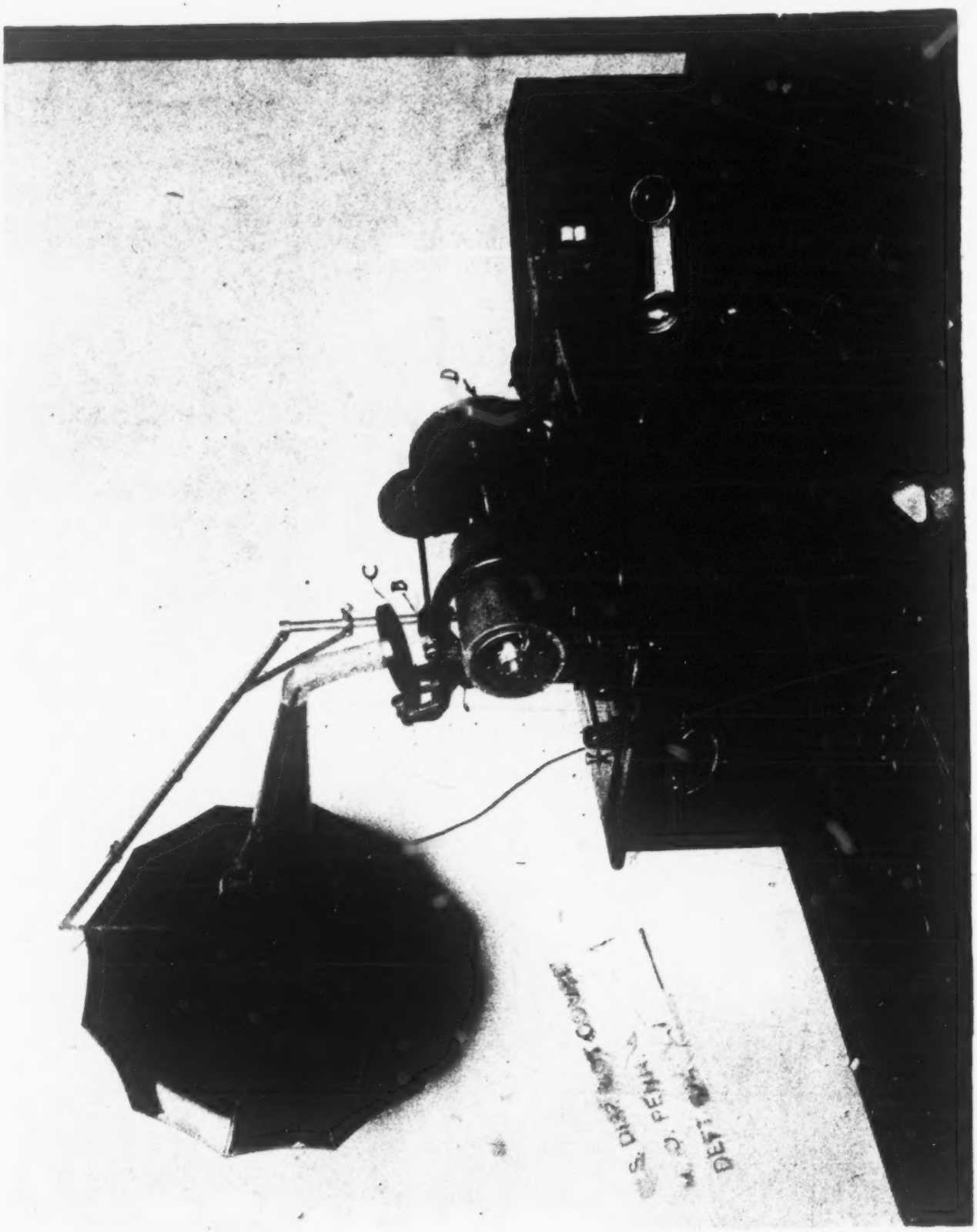

Phonograph Used With Edison Talking Moving Picture Outfit.

Is placed behind *thin* white curtain or at right or left of regular picture screen if same is too thick to talk through.

A—Transmitter connected to projection machine operator's head set to assist in synchronizing.

B—Amberol roller on which rests rubber shoe which is connected to diaphragm by aluminum rod. This is the amplifying feature.

C—Mica diaphragm clamped between small rubber rings.

Wax record is driven at speed controlled by motor governor.

Endless belt (black silk fish line) driven by pulley on rear of "D" drives synchronizing machine on projecting machine.

DEFENDANTS' EXHIBIT NO. 16.

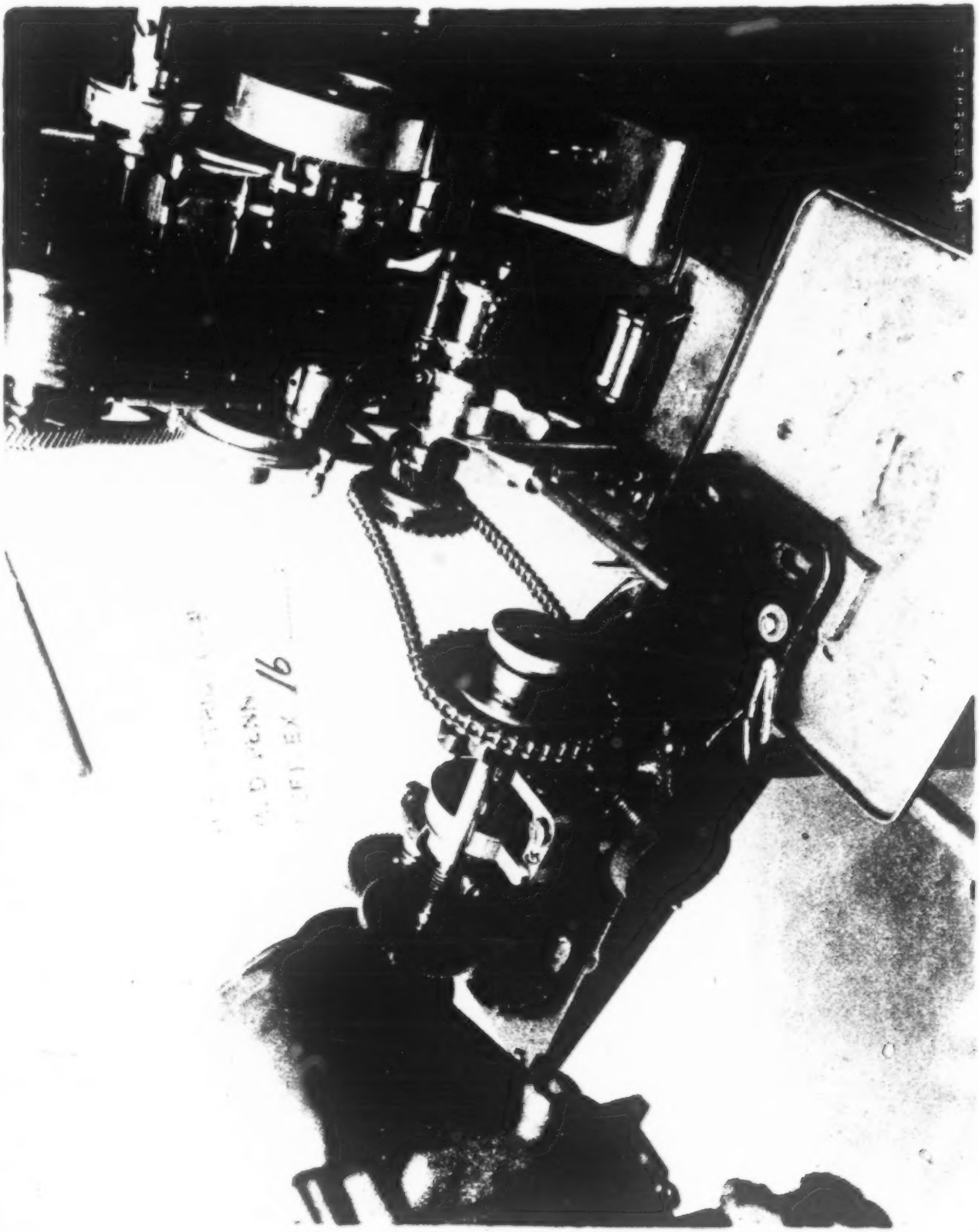

DEFENDANTS' EXHIBIT NO. 17.

Tracing Entitled "Assembly Recording Machine, Kinetophone, Edison Laboratory," Dated October 4, 1913.

(Physical Exhibit.)

DEFENDANTS' EXHIBIT NO. 18.

Tracing of Balance Wheel of Kinetophone Recording Machine Dated October 1, 1913.

(Physical Exhibit.)

DEFENDANTS' EXHIBIT NO. 19-A.

Material List for Recording Machines 896, Edison Laboratory, Dated October 7, 1913.

(Physical Exhibit.)

DEFENDANTS' EXHIBIT NOS. 19-B TO 19-LLL. INCLUSIVE.

Sixty-three Drawings Comprising Sub-Assembly and Detail Drawings of Edison Kinetophone Referred to by Witness Taylor.

(Physical Exhibits.)

DEFENDANTS' EXHIBIT NO. 20.

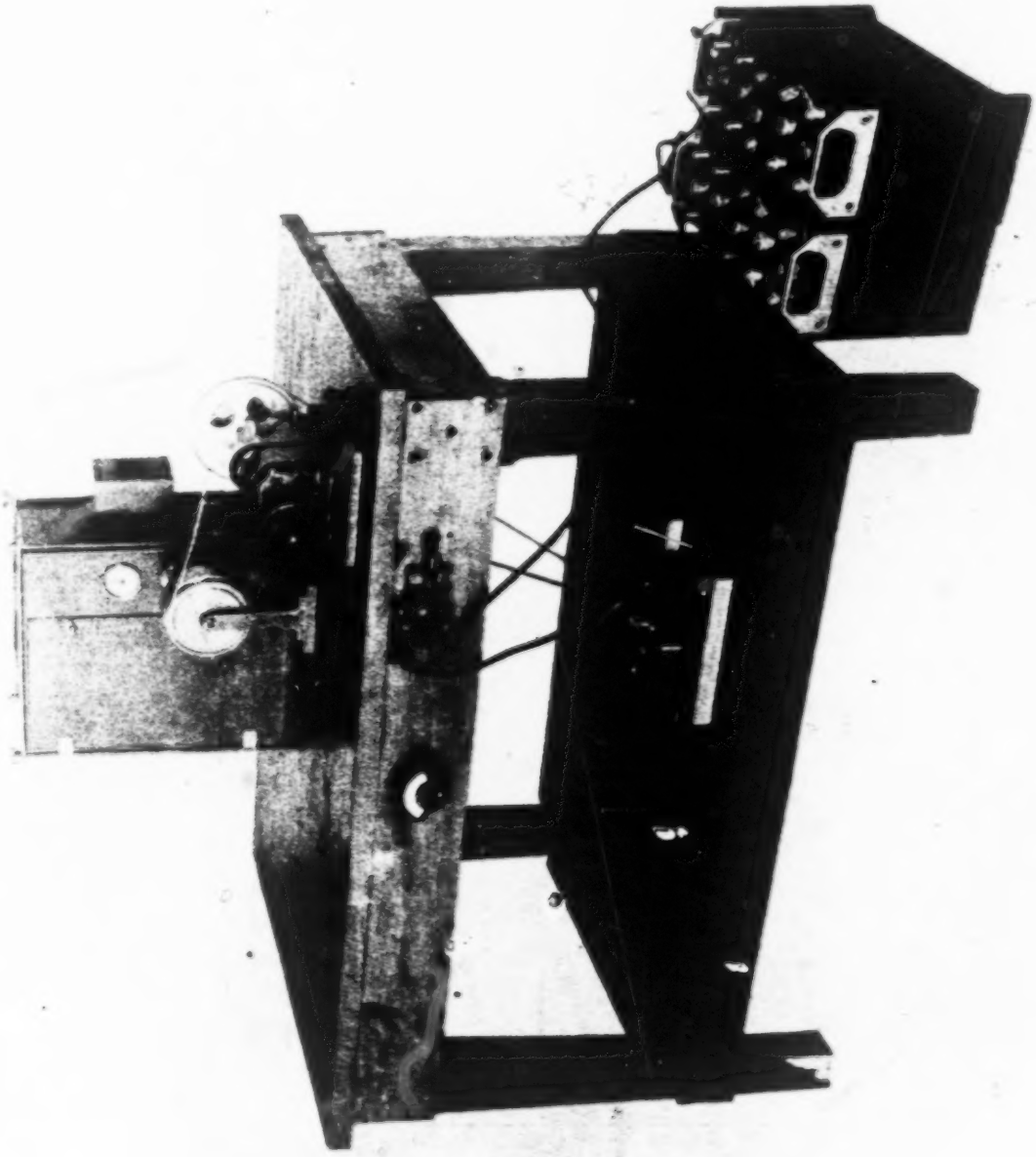

DEFENDANTS' EXHIBIT NO 21

NAME KINETOPE RECORDING MACH. PEDESTAL

SUPERSEDES No. _____ SUPERSEDED BY No. _____

DRAWING No. A A/1059

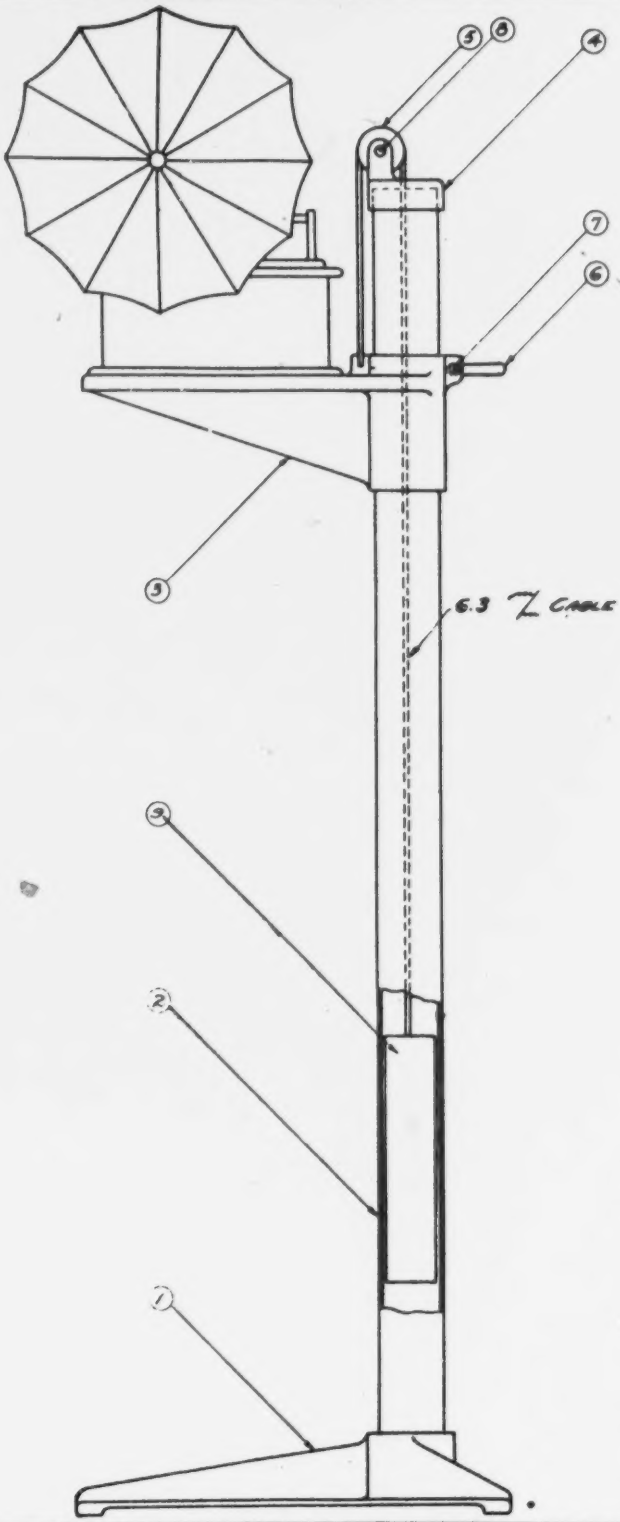

NAME	WHERE USED	MODEL	TYPE	PIECE No.	PIECES PER UNIT	SIZE OF STOCK	MATERIAL		GRADE	PATT. No.	FINISH OF COMPLETE PIECE

REMARKS

DRAWING No. A

CORRECTIONS

DRAWN BY R. Smith CHECKED BY T. D. Smith Edison Laboratory

TRACED BY [illegible] APPROVED BY _____ ORANGE, N. J. DATE OCT. 20-13

DEFENDANTS' EXHIBIT NO. 22.

5832

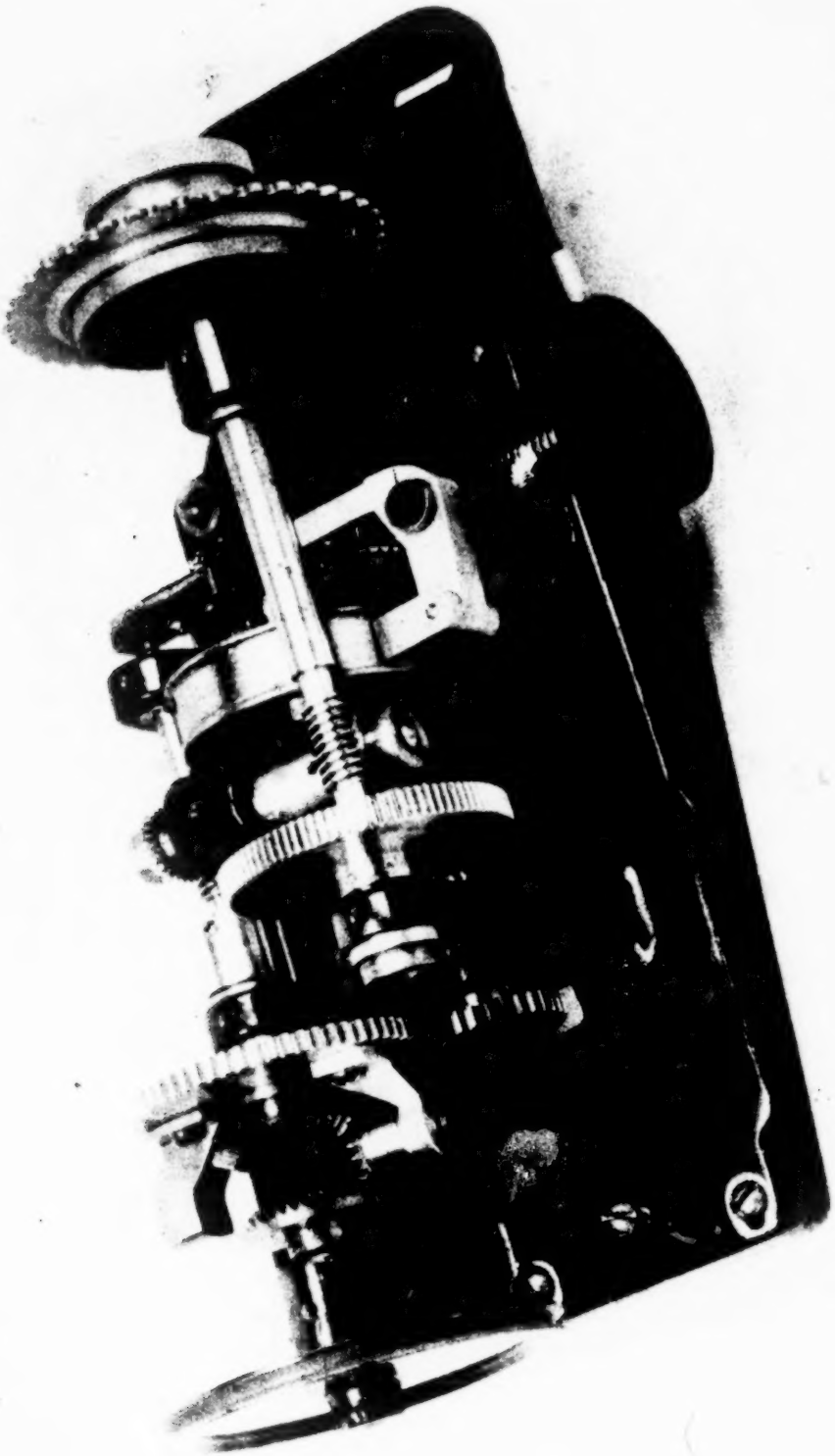

DEFENDANTS' EXHIBIT NO. 23.

Cable Address "Edison, New York"

FROM THE LABORATORY

OF

THOMAS A. EDISON

Orange, N. J. Jan. 14, 1915

M. R. HUTCHISON,

My dear Taylor:—

I am exceedingly glad to hear from you, and have made copies of your letter, sending same to Mr. Edison, Mr. Wilson, and Mr. Stevens. I will advise you further when I have talked with them.

I will get into telephone communication with your brother, as you suggest, and we will make an appointment to get together.

I do not think that you should wait too long before coming into possession of sufficient funds to keep you going, and suggest, personally, that if you get caught in a tight place for funds, that you cable Thomas A. Edison, Inc. here, asking for relief.

I am addressing a letter to the State Department, requesting early attention to the Ambassador's request for passport for you. I am quite sure Mr. Bryan will give this his immediate attention.

I am sending you, herewith, a copy of Theodore Edison's "Edison Works Monthly" and also a copy of our regular monthly, giving you a pretty good idea of the extent of the fire.

Building 24, and in fact all the buildings over here, except the power station, were gutted. The Kinetophone Studio and Electrical Building were both saved. So also was saved the frame building, right

alongside of 24 building, in which the electroplating of the masters is done in. All the out-buildings of the Laboratory and the Laboratory itself came through in fine shape. The executive building was gutted. The Storage Battery buildings were not injured in the least.

I suppose the loss will be in the neighborhood of three millions.

The next morning, at eight o'clock, we had an Erie train here, which brought in the wrecker. Started right in to pulling the presses, etc. out of old wrecked 21 building and 23 building. We hired a lot of different machine shops around this part of the country, and started a good many thousands of men to work overhauling tools, dies and other machinery. The fact that the buildings did not collapse, but simply burned out inflammable material, such as work benches, etc., did the machinery no further harm than melting the babbitt out of the bearings, etc.

Within two weeks of the date of the fire, we had removed, rebuilt and had in operation over in the Storage Battery Plant, machinery which, with the work benches, covered about six acres of floor space. Mr. Edison turned over the manufacturing of the disc phonograph, etc. to Mr. Bachman in the Storage Battery Works, and he certainly has made a record. By January first, the first disc phonograph was turned out, Type B-80, and on the same date the first Blue Amberol and the first Disc record were turned out. If that isn't hustling, I don't know what is. You know what that means in the way of getting together the necessary machinery, material, etc.

In four days, a new building went up on the site formerly occupied by the wax building, at the end of 24. In four more days, a long building went up in place of the brick building in which the disc blanks were made—right opposite the executive building. In fact,

buildings are going up like mushrooms. We are putting up one-story corrugated iron temporary structures.

24 building is in operation on three floors, with the complete set of window frames and window sills with wired glass windows.

The executive building is fully equipped with the same sort of frames, sills and wired glass, and is in service as a part of the manufacturing plant.

The Phonograph Works and T. A. E. Inc. offices are over in the Storage Battery Building, on the fourth floor. Mr. Wilson and other heads of Incorporated, are in the Library of the Laboratory. You would think that this was the headquarters of the German and Austrian Armies. Everything is running like clockwork, and everybody working like Sam Hill.

Pressure of time prevents my writing you further, but suffice it to say that within the next few months, we will be running along as usual.

We have temporarily ceased development of the talking pictures, because of the fire, and everybody being too busy to give the matter attention. As soon as we are straightened out again, we will go at it.

If you get into any trouble, by reason of not having passports, or any other way, send me a cablegram addressed

Massacon, New York.

I will immediately get in touch with the State Department, and the wires will begin to hum. It is not my principle, nor the principle of our concern to send a man away to a Foreign Country, and have anything happen to him, especially when that man has been with our concern as long as you have, and is known to us to be the soul of honesty and right living.

With my very best regards, and wishing you a Happier New Year than you have had during the last

part of the old year, I remain, with regards from Gall, Kennedy, Albert and myself,

Yours sincerely,

M. R. HUTCHISON
Chief Engineer to and Personal Representative of Thomas A. Edison

Mr. Henry A. Taylor,
Seidlgasse 37-T12,
Vienna, Austria.

DEFENDANT'S EXHIBIT NO. 24.

IMPERIAL COUNSEL
ARTHUR KOLA
IX/3 Frankgasse, 1

Vienna March 2nd 1915

To the Direction
of the Imperial Royal Police,
Vienna.

In my capacity of Member of the Board of the Deutsche Edison Kinetophon Gesellschaft m. b. H., located at Vienna, V1 Wallgasse, 39, I take the liberty to make the following request:

The Edison Company in Orange, New Jersey /America/ has sent us in March 1914 two Film-Recording-Operators i. e. Messrs Allen Everett and Henry A. Taylor. Owing to the War the Deutsche Edison Gesellschaft have completely suspended their business and taken the decision to send the two operators back to America.

Mr. Everett has left Vienna on Saturday already, but the R. I. Police refuse to permit Mr. Taylor to

return to America as he is not in a position to produce the necessary papers. The lack of these documents is explained by the fact that when Mr. Taylor left America in March of last year, he had not taken into consideration the possibility of the outbreak of a World War. He is a very able and honest worker who has been for many years in the employ of Edison, sent to us by Edison and with whom we were satisfied in every way. Now Mr. Taylor, living at Vienna 111, Siedelgasse, 37, has already bought a steamship ticket for the 9th of this month via Genoa to New York, and under these circumstances I would request that the R. I. Direction permit him to at once start his journey for America, as otherwise the Company which I represent would incur considerable expenses. Awaiting a favorable reply etc.

(signed) Arthur Kola

DEFENDANTS' EXHIBIT NO. 25.

Cylindrical Record Entitled "The Birth of the Telephone," by Thomas A. Edison.

(Physical Exhibit.)

DEFENDANTS' EXHIBIT NO. 26.

Cylindrical Record Entitled "The Edison Minstrels."

(Physical Exhibit.)

DEFENDANTS' EXHIBIT NO. 27.

Two Pieces of Film Made in Vatican, Rome, June, 1914.

(Physical Exhibit.)

DEFENDANTS' EXHIBIT NO. 28.

Ernemann Projector Marked "Ernemann II."

(Physical Exhibit.)

DEFT. EX.
Ex. A for Identification
U.S. DISTRICT COURT
M. D. PENN.
DEFT. EX.

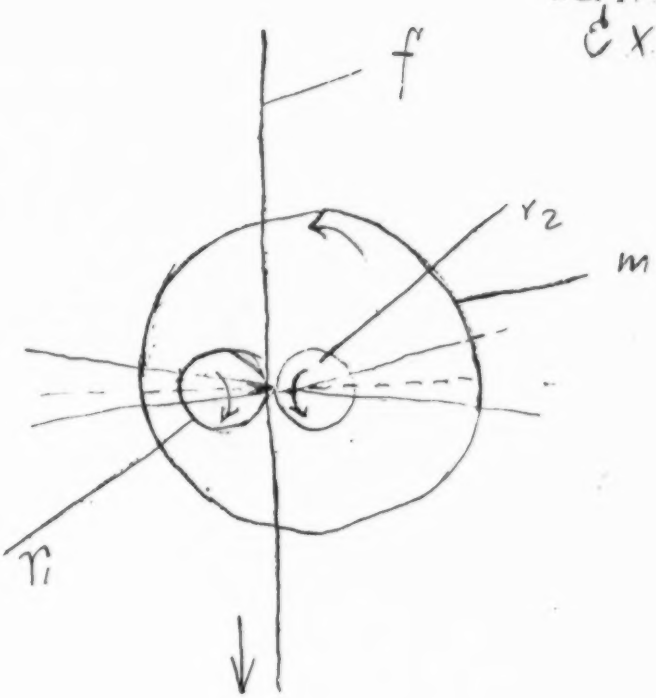

U. S. DISTRICT COURT
M. D. PENN.
DEFT. EX. 29 in evidence

DEFENDANTS' EXHIBIT NO. 30.

U. S. DISTRICT COURT
M. D. PENN.
DEFT. EX. [redacted] for Identification

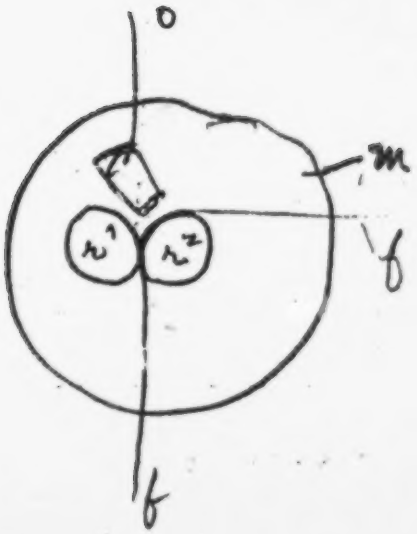

Sketch handed to Dr. Engel

U. S. DISTRICT COURT
M. D. PENN.
DEFT. EX. B for Iden

U. S. DISTRICT COURT
M. D. PENN.
DEFT. EX. 30 in evidence

DEFENDANTS' EXHIBIT NO. 31.

Edison Triumph Model Reproducing Machine.

(Physical Exhibit.)

DEFENDANTS' EXHIBIT NO. 32.

Separate Motor for Edison Triumph Machine.

(Physical Exhibit.)

DEFENDANTS' EXHIBIT NO. 33.

Belt for Edison Triumph Machine.

(Physical Exhibit.)

DEFENDANTS' EXHIBIT NO. 34.

Recording Element for Edison Triumph Machine.

(Physical Exhibit.)

DEFENDANTS' EXHIBIT NO. 35-A.

Edison Wax Recording Machine

Top View of Governor and Cam

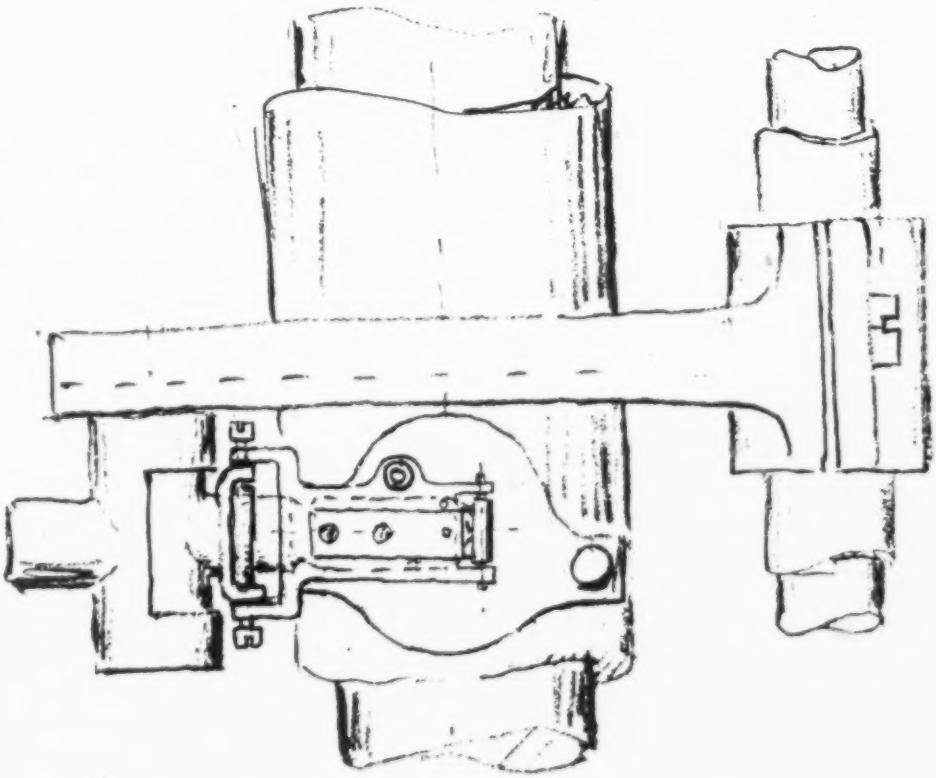

U. S. DISTRICT COURT
M. D. PENN.
DEFT. EX. 31-a

ISSUE	CH.	ENG.	TITLE
	DR.	TR.	
	APPL.		SCALE
			BELL TELEPHONE LABORATORIES, INC., NEW YORK
			ES

E-318-A 6-32) PRINTED IN U. S. A.

Edison Wax Recording Machine
End View of Reman and Arm

U. S. DISTRICT COURT
M. D. PENN.
DEFT EX.

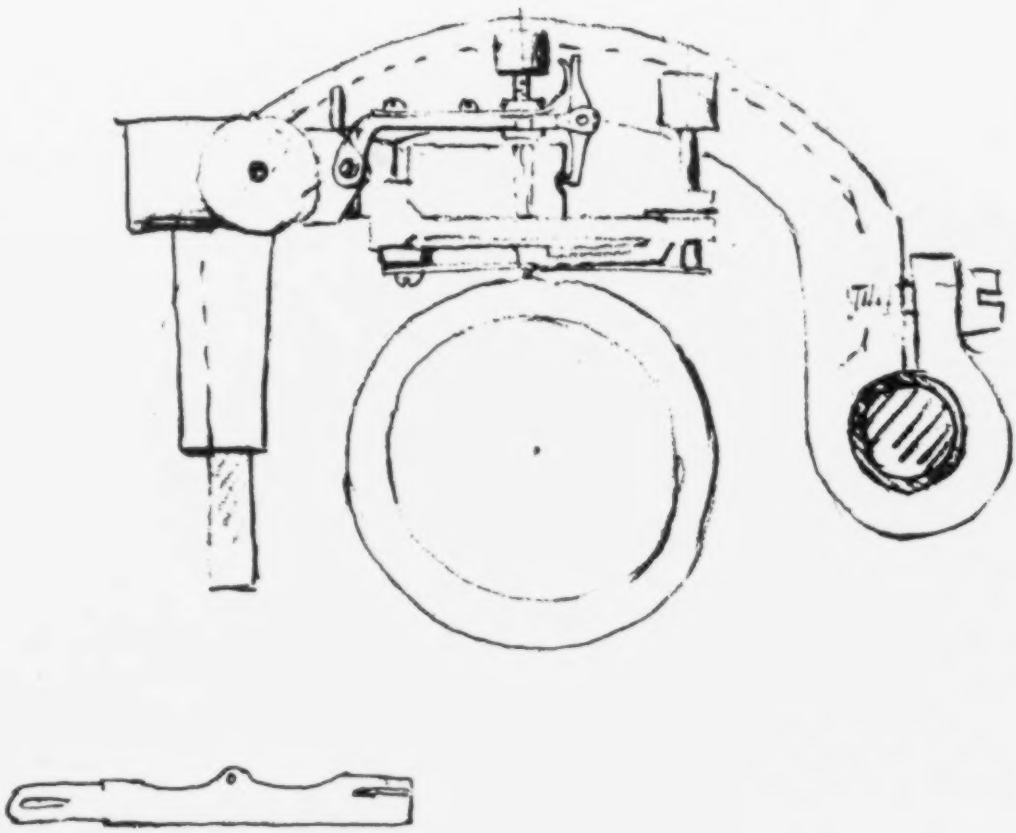

TITLE

SCALE

BELL TELEPHONE LABORATORIES, INC., NEW YORK

ES

ISSUE

CH. ENG. DR. TR. APPL.

PRINTED IN U.S.A.

DEFENDANTS' EXHIBIT NO. 36.

Duryea-Trowbridge Oscillograph.

(Physical Exhibit.)

DEFENDANTS' EXHIBIT NO. 37.

Specimen of Record Made on Duryea-Trowbridge Oscillograph.

(Physical Exhibit.)

DEFENDANTS' EXHIBIT NO. 38.

Strip of Paper With Black Line Indicating the Approximate Size of the Line of Light From the Cylindrical Lens of the Duryea-Trowbridge Oscillograph.

(Physical Exhibit.)

DEFENDANTS' EXHIBIT NO. 39.

Type 11 Victrola.

(Physical Exhibit.)

23

10/23/15 Quite a long talk with Hull about "talking movies". Langmuir suggested in that talk yesterday using a .0002" filament in H_2 that would heat & cool down rapidly enough to follow 4000 vibrations. This if focused on a slit across the edge of the film would give a strip of varying intensity when developed: & this strip run past a similar apparatus would let through light of varying intensity upon the photo electric cell. Both the recording apparatus and the transmitting would be placed probably below the lowest racket wheel where the motion of the film is uniform

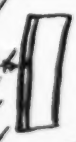

10/25/15 Shop orders for the new building 87 are

Building	36161
Piping & wiring	38172 to 6
Heating	39159
Water sewer & drain	40046

10/26/15 Call Mr Loucks 4191 when 87 ready for transformers — blower — from Wyatt

25

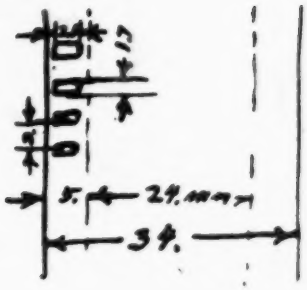

Moving picture film has 16 pictures per foot and runs 1 ft. per second

Ran thru a set of readings (sheet NR1) with arrangement #1 and 4.52 amp through filament tube #13 from a 10 v storage battery. V_A = 250 v shop.

Another run with 4.95 amp. in filament. (sheet NR1)

10/28/15 The equivalent resistances of the portion of these curves having a negative slope are 7,800 w & 2,600 respectively - these being the slopes

10/30/15 In the above curves we find $i_A + i$ = constant, or that all of the electrons emitted from the filament reach either plate or grid. And furthermore since the ratio of the ~~two~~ ordinates of and abscissae for the curves of different filament temperatures (c i currents) is a constant for any value of these currents - namely 3 the electron emission at 4.95 amps is 3 times that at 4.52 amps

The variation at the end is due not to emission but to field strength.

12/21/15 With the arrangement of the triangular mirror as planned we have a maximum width of exposed film equal to the height of the mirror (along the wires). The triangular beam of light falls on the slit this way and a change in the angle of the mirror will give a different ~~length~~ width to the exposure — up to the limit of the mirror height. Beyond this point we get total darkness. Your record on the negative is like this

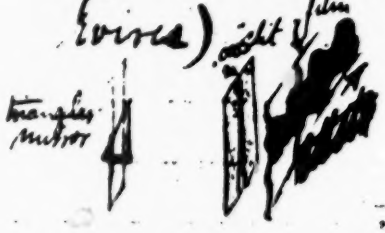

This looks like a horrible sound.

Another thing. If the slit is not placed in the center of the mirror the limit at which [illegible] is reduced. The zero will probably "creep" more than enough to bring this breaking limit way down during any run. It looks then as if we should be obliged to get big mirrors both high (to use the entire available space) and broad to allow of easy permanent setting. The sensitiveness will increase with the L of the mirror both because of the period decreasing & the variation of the length of ~~[illegible]~~ slit lighted for a given deflection of needle

Another way of arranging the light would be to have several mirror — throwing their images next each other so as to form a wide beam on the film. — Connect all in series. They will then oscillate as shown & by making the amplitude of max noise equal to the space available on the film will get the total space used for the lowest notes. The quantity of light falling on the photoelectric cell is then the unshaded portion between the dotted lines and this is proportional to the oscillating part of current plus a constant

$$Q = a(i_{os} + c) = a i_{os} + c'$$

This c' will be absorbed in the reproduction.

A better way would perhaps be to have a broader source and only one mirror

12/23/15 This broad source idea worksout very well so far on the brice & the 1000 ~~[illegible]~~ generator. We have not succeeded yet in making this new tube 16 oscillate.

Floor of Bldg 87 about to go in.

58
4 4/[illegible]

12/27/15 I'm trying to get an oscillograms of a note sung in the telephone in series with resistance a battery of cells & the oscil needle. Then fasten this inside a glass cylinder 3 in. This to be spun by motor. Inside the

drum a mirror on the axis reflects a converging beam from outside on an small slit very close to the film. The quantity of light going thru the film depends on its density - ei exposure. This light after penetrating the film & glass falls on the photoelectric cells & here ~~gen~~ breaks up ~~into~~ which give us the current. This magnified with Dynatron into the desired point

12/28/15 There certainly seems to be something the matter with the present Dynatron. The characteristic curve is all right but for some reason the oscillations are - not. Have not done a thing all day

12/29/15 The work on 87 does not seem to be progressing as rapidly as it might. The cement for the machines has been poured for a

will not be effected appreciably whereas the fundamental will be destroyed. Now the question is if this is true, why will not this also destroy or at least greatly reduce static.

5

We've taken a number of oscillograms as shown on p57 top & are now arranging the photoelectric cell for reproduction of the electric currents. The dynatron is not nearly as sensitive as it should be. Hull suggests a storage battery for the filament as necessary

1/8/16 The curtains for the Mg cells have been worrying me

1/10/16 Asbestos cloth #595 is 36" wide. This arsem says is the thing for us The question it will it pay to put this all around the top of each cell

Found out today that there is no 2"x2" angle iron at J. Millers (Lewis) for those frames. He is going to try to find some in the S.B. dept. & if he can't to get the nearest thing to it.

the air velocity thru this opening independently of the quantity of air going thru. With the holes made for the air velocity will not be sufficient to prevent the powder from falling thru ~~slowly~~ as the paddles turn. By regulating this aperture then we can get the powder falling thru just as fast as we please & it will be the driest powder at the bottom - ie that that has been in the chamber longest. A worm feed carries off the dry powder from the hopper underneath & delivers it directly to the cell where the NH_4Cl is evaporated. The advantages are independent regulation of salt and air and continuous feed instead of shutting down for each charge

1/29/16 Putting in a pilatron, an amplifier pending arrival of the dry batteries.

1/31/16 Floor of bldg 87 set. One of the 2" angle iron ⊔ pieces on which the cells rest apparently lost in transit.

Set up pilatron with the plate fastened to 1260 volts thru the photo electric cell. No amplifier

Then Pluto came down & arranged it as shown with a better pliatron. This gave great amplification

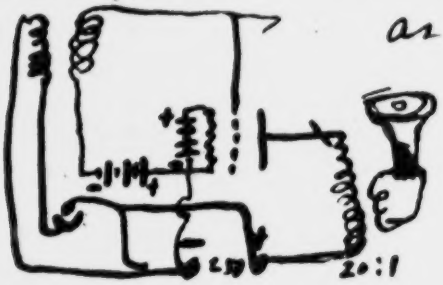

2/2/16 Yesterday with the above arrangement gave such good results that we tried it first on the flash lamp noted on the film & then on the photograph of a whistle. Even in the last a response was distinctly audible in the telephone.

Quite a talk with Langmuir on the extraction of I_2 from sea water by running thru a tube extending from the bow to stern of a vessel, spinning water rapidly & drawing off the I_2 from the center of the pipe.

2/4/16 Am trying to get up a furnace for drying the aluminium ammonium chloride by a continued process.

Flash order for Chem equipment $87
22907

in the breaking off of these exhaust tubes
One is the failure to kneed the two tubes together. This might be remedied by pulling the exhaust tube up while the press is still hot.
The other is the rapid cooling of the exhaust tube due to the blowing down it of the jet of cold air after the breaking thru of the hole. This may be remedied by heating the air or tube ~~before it~~ thus preventing the chilling. Perhaps a better way would be to run a soft fire on the press in the next position of the head; allowing the flame to go up the exhaust tube; pulling the [illegible] up if necessary with an air jet across the top of the tube (injector action). It might be enough simply to stop the air jet that blows the hole, the instant the hole is blown & then let the piece stay in the fire a few seconds

2/10/20 We're having trouble with our galvanometer A pot of 1.342 volts thru 50,000 ω gives a deflection of 9.15 cm at 101 cm distance on the .001 step of shunt. Or [illegible] x 8 - x .5 amps for 9.15 x 10³ cm deflection

On 1 cm deflection, means 2.93×10^{-9} amps
Source Ad 100 at about 1 ft given perhaps 2
cm on the .001 step. This is about the range
we need for 50 w lamps 2' away.
$3. \times 10^{-9} \times 2. \times 10^{3} = 6. \times 10^{-6}$ & this is the
current flowing thru the cell under conditions
suitable for automatic photometering. Working
under a potential of 250 volts then means the
cell resistance is $\frac{250 \times 10^{2}}{6. \times 10^{-6}} = 4. \times 10^{7}$ ohms.

2/16/20 White arranged a photron
to magnify our cell currents up to
the point where a change of ½ volts
either way from normal 125 volts
using a 40 watt lamp at about 15"-18"
would light a pilot lamp. This corresponds
to a change of candle power of about
4% each way. Wrote a note to Fuller
about this & to Van Horn

Found by changing the relative position
of the needle in the galvanometer that
the "kooks" in the curves we had attributed
to sticking or catching of the needle were
in reality due to some inconsistency
in the cell. We are trying various

226

3/15/20 We're not getting deflections on our galvanometer proportional to the light falling on the photo el cell.

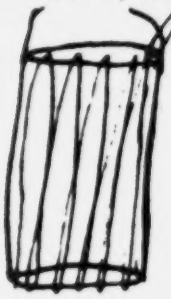

We asked Ruggles to make up a cell having a cylindrical grid covering the potassium & close ($\frac{1}{2}$") to it. We are trying also a ground glass disk in front of the cell window

V Our old cell had no dark current but the last few have had – except the very last one. This & the first were made with a silvering solution instead of volatilized silver.

Miss Quackenbush found the substitutes of talc (for smoothness) & asbestos (for sticking) for the zinc oxide in the lacquer used for painting lamps to be an improvement in the clustering tide.

3/16/20 Van Brunt investigated the slag brought back from the Bell works at Clairton as Na_2SO_4 (probably K_2SO_4) & the sample sent

Unit deflection on the plate has been chosen as the quantity of light falling on a $2\frac{1}{2}$" d circle $5\frac{1}{2}$ from a source $\frac{29}{32}$" × $\frac{31}{128}$" or of area .616" on an area of 4.91"

The light from a source of area A_1' falling on a screen of area A_1'' is $L_1 = B\frac{A_1' A_1''}{d_1^2}$ & of two such systems

$$\frac{L_1}{L_2} = \frac{A_1' A_1'' d_2^2}{A_2' A_2'' d_1^2}$$

For unit deflection $A_1' = .616$, $A_1'' = 4.91$ $d_1 = 5.5$

" Common pt " $A_2' = .25$ $A_2'' = .616$. $d_2 = 3.7$

or $\frac{L_1}{L_2} = \frac{41.4}{4.66}$ or $L_2 = .1128\, L_1$

& on the plate $L_2 = .113$ since L_1 is 1.

Actual measurements on plate # 186 gives $L_2 =$ .11 instead of the .113 - 10% (for reflection in condenser) = .102

9/28 Wrote to Sage at Corning about the Noviweld Glass - to obtain it in blown sheets for Mr W. S. Andrews

10/22 Quite a talk today with Mr Stevenson with regard to the use of the photoelectric cell for determining the time of exposure

of in printing positive motion pictures films and the illumination of motion picture scenes for the original taking.

11/12/20 I wonder whether a glass furnace could not be made
(1) by dropping glass powder down thru an arc
(2) by using flames such as Dantzizen did on his artificial saphires.

Long talk with Merrick about other possible furnaces.
He is thinking of straight electrode conductor or of some arc furnace or of a combination of the two.
I suggested an induction furnace with an iron ring laid in the glass to start. Merrick thinks this is wild but he's going to write to Pittsfield. He's also going to try to find the temp-conductivity curve for glass

11/13/20 Talked to Allen this morning about the induction furnace he saw at Pittsfield no effect here of permeability

~~most~~ but little of the light returned thru the lens, because of the multiple reflections between the mirrors at the left. That is tho. only one half of the light reflected from 2 is neutralized by the .. returning from 3 after a single round trip, $\frac{1}{4}$ more is neutralized by light that has made two trips, $\frac{1}{8}$ more by 3 trip light & so on — having losses in 3. Half the light returning thru the lens goes thru the half silvered mirror 1 & enters the cell. cf p 275

Witnessed 12/16 20 Frank W Harrison

I've been wondering what the effect of X rays of the order of those used in photographing would be on a cell. If sufficiently sensitive (Perhaps Na) we could run the cell under the patient with the X rays turned on before making the plate & by the galvanometer deflection determine not only the exposure needed for the plate but what the contrast ~~of~~ of the plate should be

12/16/20 Tried today some deflections when exciting cell by X rays. (cf Ottmans N B) Even with a very insensitive cell found a very satisfactory deflection (10 cm) without

intervening screen & 3 with a lead shield between cell & X tube. No very definite quantitative measurements taken as X tube not at all constant, but looks as if we could determine exposure this way pretty well before instrument taking a plate – also could determine the range of illumination over the area of interest & so the contrast of plate desired.

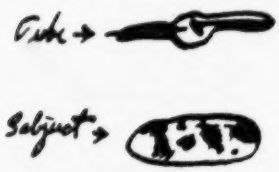

Went over to the photograph house & tried timing a lantern slide plate by their method & by ours (p261). Slides not finished yet.

12/17/20 It would of course be better to have the plates of the interferometer transmitter p262 more than ¼ wave length apart so that the increase of air pressure between them due to vibration of M_2 would not move M_2 appreciably. The normal position of M_2 should be an odd no. of ¼ wave lengths ± ½ wave length from M_2. If the light is panchromatic the smaller the distance the better, the above condition being fulfilled.

270

10 TS

Quite a talk today with of the Std Lab on illumination of oscillographs

12/24/20

A 60 W 127 V lamp standardised by Fonda gives .498 amps or 63.25 watts & 53.8 cp horizontal toward the label..
This is 1.175 wpc
Putting these values in the last page
$S = 2.3\overset{8}{\cancel{77}} \cdot 10^{-9} \frac{d^2 R}{E}$ = conductivity in ohms^{-1} per lumen

12/27/20 Stevenson suggests running the negative M.P. film thru a machine & testing ~~the~~ the printing qualities by exploring the screen with a photo electric cell. This might be easier than (tho not as accurate) ~~than~~ running the film past an aperture, all but a small part of which is colored very dark so that ~~in the light part only will the~~ only that light falling thru the clear portion will effect the cell appreciably. If this clear portion be put over the lightest & darkest portion of the

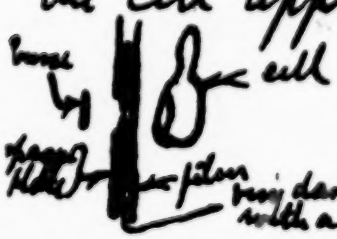

very darkly colored glass or celluloid (perhaps flashed only with a small hole

layer of silver that would perhaps form on the surface.

1/19/21 The cell might be put in a safe as a burglar alarm or in a room

Quite a talk with Mr Koxie on the optical arrangements for maximum illumination.

1/20/21 It seems to me that if the mirror of Mr Koxie's telephone diaphragm were covered by the image of a filament by the whole of a lens subtending a large angle at the mirror we would get as much light as possible from this mirror. If now beyond the mirror we insert in this conical diverging beam two cylindrical lenses having their axes ~~at~~ ~~to~~ the axis of the beam & to each other (& ∥ the sides of the mirror) we could by suitable selection & placing of these cylindrical lenses get an illuminated ▭ of any desired length & breadth & of the maximum illumination. This

1/31/21 Quite a talk with Mr Hoxie today about loud speaking telephones. Suggested

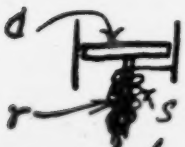

a disc (d) driven by a rod (r) which in turn is driven by an electro magnet etc. The neutral position is determined by a spring (s) which gives us a restoring force proportional to the displacement for all displacements instead of being a complicated function for motions other than minute. Of course, by making the diaphragm larger, we could get a greater amplitude without this distortion of the restoring force but the increase of thickness necessary to maintain the free period low enough, will mean the force required must be very great

2/1/21 Trying different arrangements for the brightness measures of p 271-2

2/7/21 Saturday we found, by hanging up 7 colors in turn against different parts of a black back ground & giving them exposures inversely proportional to the deflection produced in the cell that the 7 parts of the plate were exposed to almost the same density. This means

that the photoelectric effect is a fair measure of the photographic effect. Wrote this to Rohr at the N.Y. office & Stevenson intends to write Porter about it suggesting a paper before the S.M.P.E.

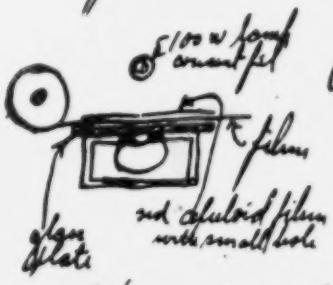

An easy way to determine printing time would be to put the negative film – or rather that part of it of the most interest – above a cell & between it & a lamp. On top of the negative a red celluloid film with a small hole in its center, would ~~can~~ be moved around till the hole came over the part of interest & the galvanometer red. The object of the red is to allow sight of the film while placing & yet allow only the area of special interest to effect the galvanometer. With this apparatus we can pick an exposure half way between that required to place the important high light & important shadow in the middle of the exposure curve of the ~~plate~~ positive film. This will use the gradation & range of this ~~plate~~ to the maximum possible advantage. We can also tell ~~exactly~~ whether this range is sufficient to print the film properly & even what

DEFENDANTS' EXHIBIT NO. 41.

United States Patent No. 1,313,187.

688

A. W. HULL.

METHOD OF AND MEANS FOR AMPLIFYING ELECTRICAL VARIATIONS.

APPLICATION FILED NOV. 8, 1915.

1,313,187. Patented Aug. 12, 1919.

Fig. 1.

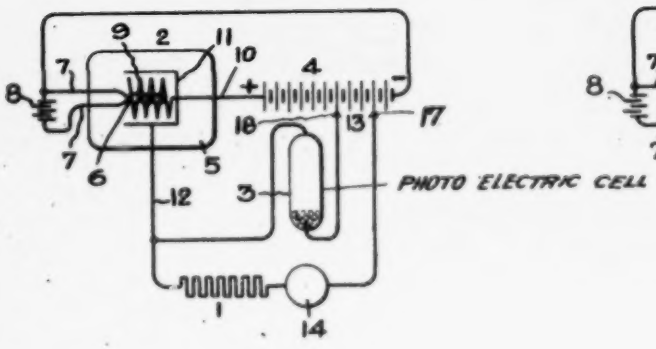

Fig. 2.

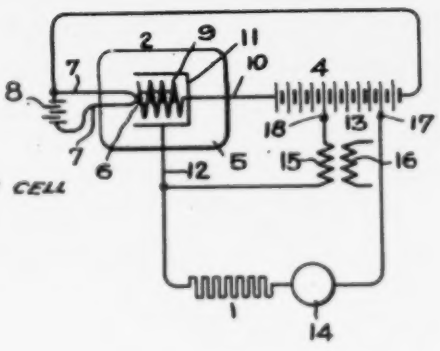

Fig. 3.

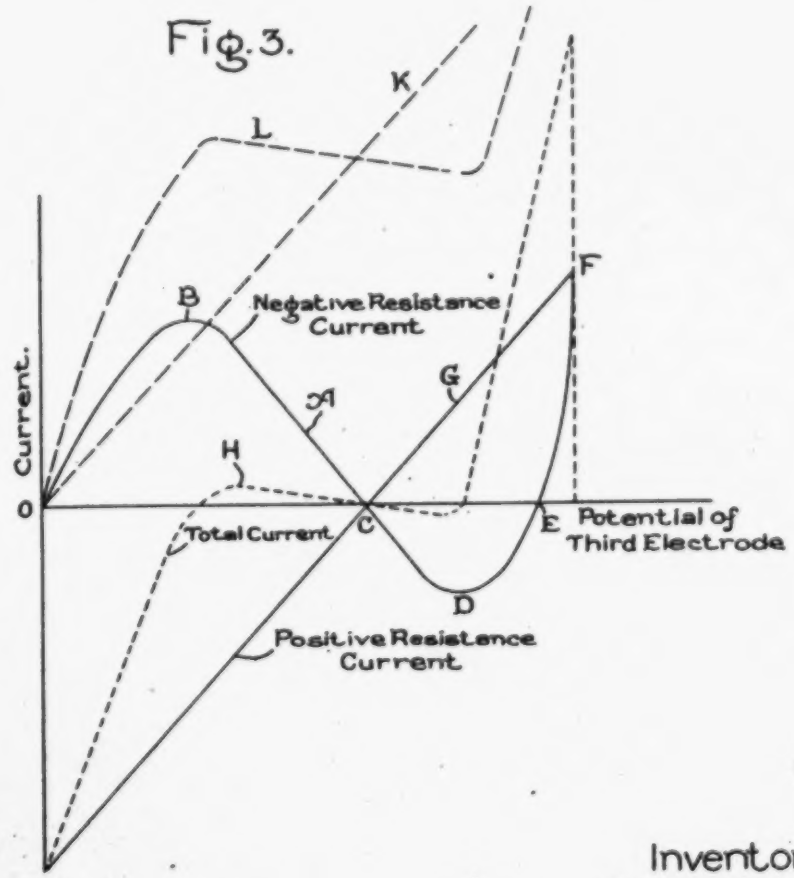

Inventor:
Albert W. Hull.

UNITED STATES PATENT OFFICE.

ALBERT W. HULL, OF SCHENECTADY, NEW YORK, ASSIGNOR TO GENERAL ELECTRIC COMPANY, A CORPORATION OF NEW YORK.

METHOD OF AND MEANS FOR AMPLIFYING ELECTRICAL VARIATIONS.

1,313,187. Specification of Letters Patent. Patented Aug. 12, 1919.

Application filed November 8, 1915. Serial No. 60,401.

To all whom it may concern:

Be it known that I, ALBERT W. HULL, a citizen of the United States, residing at Schenectady, in the county of Schenectady, State of New York, have invented certain new and useful Improvements in Methods of and Means for Amplifying Electrical Variations, of which the following is a specification.

One of the objects of my present invention is to provide a means for amplifying electrical current, potential or energy variations of such magnitude that they cannot be readily measured or utilized to actuate desired recording devices.

In carrying my invention into effect I connect a negative resistance device in parallel with a positive resistance and impress the current, potential or energy variations to be amplified upon the circuit in which the two resistances are connected. The total current flowing in the circuit then will be the algebraic sum of the currents in the two resistances. If the two resistances are nearly equal to each other in value a very small change in the total current may cause a large change in the current through either one of the resistances.

In the following description and claims I will refer to the two resistances as being connected in parallel in a circuit when upon the closing of that circuit an equal potential is impressed upon both.

The novel features of my invention I have pointed out with particularity in the appended claims. The invention itself, however, both as to its construction and method of operation together with further objects and advantages, will best be understood by reference to the following description taken in connection with the accompanying drawing in which Figure 1 shows one system of connections which may be devised in carrying my invention into effect. Fig. 2 shows a modification thereof, and Fig. 3 shows the current characteristics of the system shown in Fig. 1.

In the arrangement shown in Fig. 1 a positive resistance 1 or other device having positive resistance characteristics is

the points 17 and 18 is included in the circuit to furnish current. It is a well known characteristic of photo-electric cells that when an electromotive force is applied to their terminals and the cathode, which consists of potassium, sodium or other metal having the property of emitting electrons under the influence of light, is subjected to the action of light, there will be a flow of negative electricity from the cathode to the anode and this current will be proportional to the intensity of the light falling upon the cathode. The current which is thus obtained, however, is too small to be measured by ordinary measuring instruments and the specific object of the arrangement here shown is to provide a means for amplifying this current to such a degree that it can readily be measured or utilized for any desired purpose.

The negative resistance which I prefer to utilize in the present case is one which is described and claimed in my prior application, Serial No. 47,938, filed August 30, 1915, and which consists of a highly evacuated envelop 5 provided with a tungsten filament cathode 6 connected to leading-in conductors 7 for supplying current from the battery 8 for heating it to incandescence. This cathode is preferably surrounded by a cylindrical wire grid 9 which serves as an anode and which is connected to leading-in wire 10. Surrounding the cathode and anode is a third electrode consisting of a metal cylinder 11 connected to leading-in wire 12. This cylinder is preferably fairly close to the anode. The relative positions of the three electrodes may be varied in order to vary the operating characteristics of the device. The envelop 5 should preferably be exhausted to such a degree of vacuum that when potentials of the magnitude desired for the operation of the device are applied to the electrodes there will be no visible manifestations of gas ionization such as blue glow.

If a positive potential is impressed upon the anode 9 there will be a flow of electrons from cathode to anode. If the third electrode 11 is at the same potential as the cath-

A. W. HULL.

METHOD OF AND MEANS FOR AMPLIFYING ELECTRICAL VARIATIONS.

APPLICATION FILED NOV. 8, 1915.

1,313,187. Patented Aug. 12, 1919.

Fig. 1.

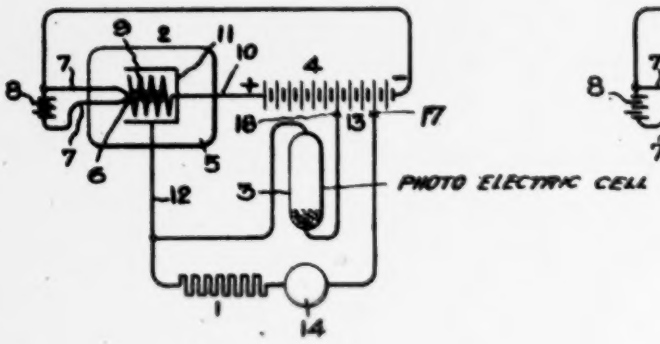

Fig. 2.

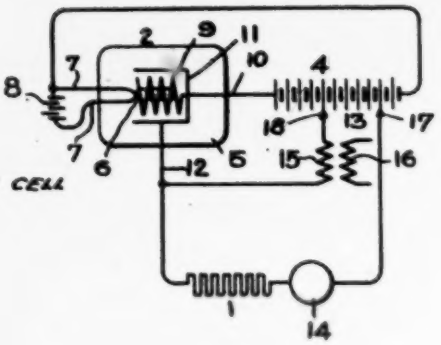

Fig. 3.

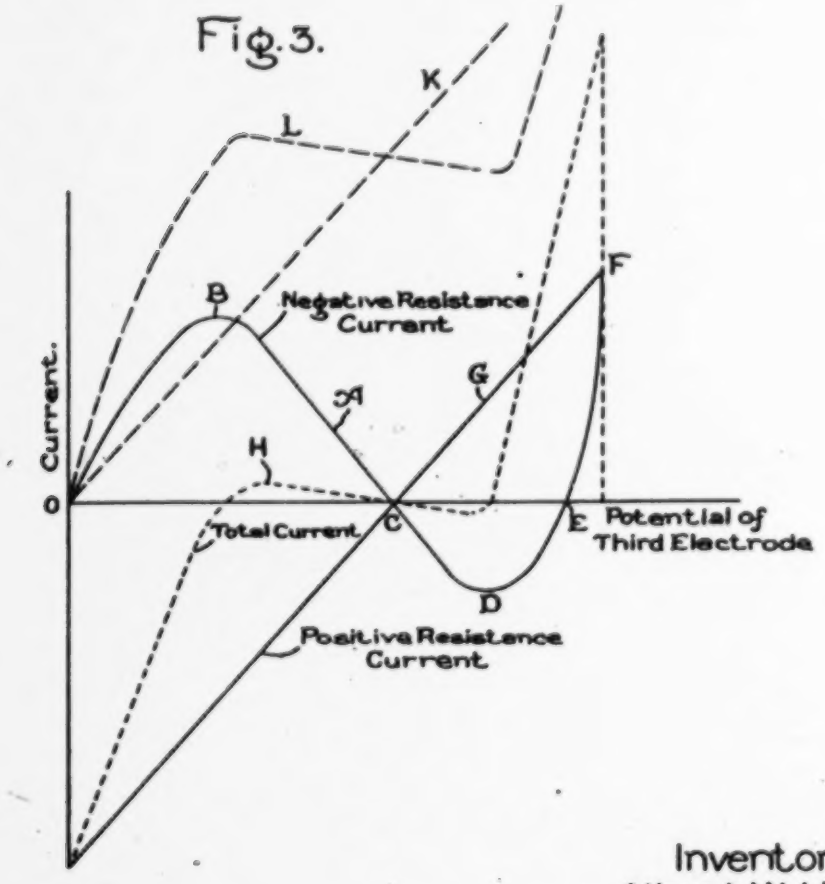

Inventor:
Albert W. Hull,
by
His Attorney.

UNITED STATES PATENT OFFICE.

ALBERT W. HULL, OF SCHENECTADY, NEW YORK, ASSIGNOR TO GENERAL ELECTRIC COMPANY, A CORPORATION OF NEW YORK.

METHOD OF AND MEANS FOR AMPLIFYING ELECTRICAL VARIATIONS.

1,313,187. Specification of Letters Patent. Patented Aug. 12, 1919.

Application filed November 8, 1915. Serial No. 60,401.

To all whom it may concern:

Be it known that I, ALBERT W. HULL, a citizen of the United States, residing at Schenectady, in the county of Schenectady, State of New York, have invented certain new and useful Improvements in Methods of and Means for Amplifying Electrical Variations, of which the following is a specification.

One of the objects of my present invention is to provide a means for amplifying electrical current, potential or energy variations of such magnitude that they cannot be readily measured or utilized to actuate desired recording devices.

In carrying my invention into effect I connect a negative resistance device in parallel with a positive resistance and impress the current, potential or energy variations to be amplified upon the circuit in which the two resistances are connected. The total current flowing in the circuit then will be the algebraic sum of the currents in the two resistances. If the two resistances are nearly equal to each other in value a very small change in the total current may cause a large change in the current through either one of the resistances.

In the following description and claims I will refer to the two resistances as being connected in parallel in a circuit when upon the closing of that circuit an equal potential is impressed upon both.

The novel features of my invention I have pointed out with particularity in the appended claims. The invention itself, however, both as to its construction and method of operation together with further objects and advantages, will best be understood by reference to the following description taken in connection with the accompanying drawing in which Figure 1 shows one system of connections which may be devised in carrying my invention into effect. Fig. 2 shows a modification thereof, and Fig. 3 shows the current characteristics of the system shown in Fig. 1.

In the arrangement shown in Fig. 1 a positive resistance 1 or other device having positive resistance characteristics is connected in parallel with a negative resistance device 2. A photo-electric cell 3 is connected in series with the two resistances and the portion 13 of the battery 4 between the points 17 and 18 is included in the circuit to furnish current. It is a well known characteristic of photo-electric cells that when an electromotive force is applied to their terminals and the cathode, which consists of potassium, sodium or other metal having the property of emitting electrons under the influence of light, is subjected to the action of light, there will be a flow of negative electricity from the cathode to the anode and this current will be proportional to the intensity of the light falling upon the cathode. The current which is thus obtained, however, is too small to be measured by ordinary measuring instruments and the specific object of the arrangement here shown is to provide a means for amplifying this current to such a degree that it can readily be measured or utilized for any desired purpose.

The negative resistance which I prefer to utilize in the present case is one which is described and claimed in my prior application, Serial No. 47,938, filed August 30, 1915, and which consists of a highly evacuated envelop 5 provided with a tungsten filament cathode 6 connected to leading-in conductors 7 for supplying current from the battery 8 for heating it to incandescence. This cathode is preferably surrounded by a cylindrical wire grid 9 which serves as an anode and which is connected to leading-in wire 10. Surrounding the cathode and anode is a third electrode consisting of a metal cylinder 11 connected to leading-in wire 12. This cylinder is preferably fairly close to the anode. The relative positions of the three electrodes may be varied in order to vary the operating characteristics of the device. The envelop 5 should preferably be exhausted to such a degree of vacuum that when potentials of the magnitude desired for the operation of the device are applied to the electrodes there will be no visible manifestations of gas ionization such as blue glow.

If a positive potential is impressed upon the anode 9 there will be a flow of electrons from cathode to anode. If the third electrode 11 is at the same potential as the cathode no electrons will be received thereby. If, however, a small positive potential is applied to the third electrode a portion of the electrons which pass through the grid anode will

strike it and it will receive a current of negative electricity. The velocity with which the electrons will strike the third electrode will depend upon the potential between it and the cathode. If this potential is increased the velocity will increase until the electrons striking the third electrode are able by their impact to liberate secondary electrons. These secondary electrons leaving the third electrode will be attracted to the more positive anode. As the potential is increased a point will finally be reached at which the number of secondary electrons leaving the third electrode is just equal to the number of primary electrons that strike it. That is, each electron that strikes liberates on an average one secondary electron. No current will then be received by the third electrode. If the potential of the third electrode is further increased the number of secondary electrons given off becomes greater than the number of primary electrons received and as a result the third electrode loses electrons, thereby supplying current to the anode instead of receiving current.

These characteristics can best be understood by reference to the curve shown at A in Fig. 3, in which the ordinates represent the electron current flowing to or away from the third electrode and the abscissæ represent the potential of the third electrode. The part O B represents the increasing electron current reaching the third electrode as the potential is increased. When the potential of the third electrode increases beyond that corresponding to the point B, the rate of increase in the emission of secondary electrons exceeds the rate of increase in the primary electrons received, and the current begins to decrease. When the potential of the third electrode reaches the point C it loses as many electrons as it receives and the current becomes zero. From C to D the number of secondary electrons given off continues to increase and the electron current from the third electrode to the anode increases. The point D is finally reached, however, at which the potential of the third electrode so closely approaches that of the anode that the number of secondary electrons lost by the third electrode begins to decrease because of the fact that the difference of potential between anode and third electrode is not great enough to attract as many electrons to the anode as before. This continues until the point E is reached where the number of secondary electrons which leave the third electrode and do not return, is equal to the number of primary electrons which strike it and the current again becomes zero. From this curve throughout the greater portion of its length is approximately straight and the straight portion may be represented by the equation

$$I = I_0 - \frac{E}{R},$$

where E is the potential of the third electrode I_0 and R are constants, depending upon the characteristics of the particular device, and I is the electron current flowing to or away from the third electrode as

$$I_0 - \frac{E}{R}$$

is positive or negative. R corresponds to the resistance of an ordinary circuit except in this case it is a negative resistance. Thus it will be seen that there is a certain range through which the device may be operated in which the current received by the third electrode will vary inversely as the potential applied thereto. In the description which follows and in the claims the term "negative resistance" is used to designate a device having this characteristic.

In the system shown in Fig. 1 battery 4 furnishes a constant potential for the anode 9. The resistances and the potential applied thereto are preferably so adjusted that when the photo-electric cell 3 is not illuminated and hence there is no current flow therethrough there will be no current through either resistance. This may be accomplished by connecting the end of the resistance 1 to a point 17 in the battery 4, so chosen that the potential thereby applied to the third electrode 11 will correspond to the point C on the current curve. Since under these conditions no current will flow through the negative resistance there will not be any current through the positive resistance. The current through the positive resistance then under operating conditions may be represented by the straight line G which falls above or below the axis of ordinates, as indicated, with reversals in the potential applied thereto. The total current in the circuit or the current in the photo-electric cell will be the algebraic sum of the current through the two resistances. The algebraic sum of these two currents with varying potentials on the third electrode is indicated by the dotted line H. By making the two resistances approximately equal to each other in value so that the slope of curves A and G is approximately the same it will be seen that a very small change in the total current will cause a much greater change in the current through either of the two resistances and it will be apparent that

When the photo-electric cell is not influenced by any light source the portion 13 of battery 4 is open-circuited in so far as its effect on the current through either resistance is concerned. When the photo-electric cell is illuminated by any light source current starts to flow therethrough and there is, in effect, a potential applied to both the negative and positive resistances in parallel which is equal to the potential of the portion 13 of the battery 4 less the drop in potential through the photo-electric cell. Since the current through the photo-electric cell varies in proportion to the intensity of the illumination thereon this drop in potential will vary in proportion to the intensity of the illumination. The effect of the application of this potential, however, is not the same in both resistances. An inspection of the curves of Fig. 3 will show that a change in potential from that corresponding to point C will produce a current in one direction in the negative resistance and in the opposite direction in the positive resistance. Hence, it will be apparent that the result of applying the potential mentioned to the two resistances will be to produce a current which circulates between the two resistances and which does not flow through the photo-electric cell. The currents in the two resistances, however, will not be equal as the current in the resistance in which the current flows in the same direction as that in the photo-electric cell will be greater than the current in the other resistance by an amount equal to the current in the photo-electric cell. In other words the current through one of the resistances may be considered as made up of two parts; one part which flows through the photo-electric cell and one part which flows through the other resistance, while the current in the other resistance will be merely the current which circulates between the two resistances and does not pass through the photo-electric cell. It may be shown mathematically that the current through either resistance will bear substantially the same ratio to the current in the photo-electric cell that the value of the resistance bears to the difference between the two resistances.

In other words, the current in the recording instrument 14 or other desired device which may be inserted in series with the resistance 1 will bear the same ratio to the current in the photo-electric cell that the resistance 1 bears to the difference between the two resistances. This will be true irrespective of the nature of the current in the photo-electric cell, that is, whether it is a constant current or a pulsating current. The same amplifying action will also in the two resistances will reverse in direction at the same time that the total current reverses in direction as can be seen from curves A, G and H.

In the above description it has been assumed that the total current in the circuit starts from zero or changes in sign. It is not essential however that this should be the case as the same principle can equally well be applied to the amplification of small changes in unidirectional currents of relatively large magnitude. If the resistance 1 were connected, for example, to the same point in the battery as the cathode 6 the current through the positive resistance would be as indicated by the curve K and the total current in the circuit would follow the curve L. If then the total current in the circuit had such a value that it fell on the portion of the curve where the resistance 2 is negative, changes in current would be amplified in the same manner as in the case first described. By varying the point of connection of the resistance 1 to the battery it will be seen that the system can always be adjusted so that the total current in the circuit will fall upon a portion of the curve where the resistance 2 is negative.

The form of my invention illustrated in Fig. 2 differs from that shown in Fig. 1 in that the photo-electric cell is replaced by the secondary 15 of a transformer, the primary 16 of which may be supplied by a telephone current or any other variable current which it is desired to amplify.

In the above description and in the claims which follow, I have used such expressions as "current flow from cathode to third electrode" to designate the net electron current received by the third electrode, or the current which will flow in the external circuit between cathode and third electrode.

While I have described the preferred embodiment of my invention it will be apparent that many changes therein may be made without departing from the scope of the appended claims. For example, in case it is desired to measure or utilize amplified potential variations the device for accomplishing the desired purpose is connected in shunt to the resistance 1 instead of in series therewith. It will also be apparent that the device 14 indicated may assume a great variety of forms in accordance with the purpose which is to be accomplished.

What I claim as new and desire to secure by Letters Patent of the United States, is:—

1. Means for amplifying electrical variations comprising a positive resistance and a negative resistance in parallel therewith, the two resistances being approximately

strike it and it will receive a current of negative electricity. The velocity with which the electrons will strike the third electrode will depend upon the potential between it and the cathode. If this potential is increased the velocity will increase until the electrons striking the third electrode are able by their impact to liberate secondary electrons. These secondary electrons leaving the third electrode will be attracted to the more positive anode. As the potential is increased a point will finally be reached at which the number of secondary electrons leaving the third electrode is just equal to the number of primary electrons that strike it. That is, each electron that strikes liberates on an average one secondary electron. No current will then be received by the third electrode. If the potential of the third electrode is further increased the number of secondary electrons given off becomes greater than the number of primary electrons received and as a result the third electrode loses electrons, thereby supplying current to the anode instead of receiving current.

These characteristics can best be understood by reference to the curve shown at A in Fig. 3, in which the ordinates represent the electron current flowing to or away from the third electrode and the abscissæ represent the potential of the third electrode. The part O B represents the increasing electron current reaching the third electrode as the potential is increased. When the potential of the third electrode increases beyond that corresponding to the point B, the rate of increase in the emission of secondary electrons exceeds the rate of increase in the primary electrons received, and the current begins to decrease. When the potential of the third electrode reaches the point C it loses as many electrons as it receives and the current becomes zero. From C to D the number of secondary electrons given off continues to increase and the electron current from the third electrode to the anode increases. The point D is finally reached, however, at which the potential of the third electrode so closely approaches that of the anode that the number of secondary electrons lost by the third electrode begins to decrease because of the fact that the difference of potential between anode and third electrode is not great enough to attract as many electrons to the anode as before. This continues until the point E is reached where the number of secondary electrons which leave the third electrode and do not return, is equal to the number of primary electrons which strike it and the current again becomes zero. From this point the electron current received by the third electrode increases with increase in its potential as indicated by the part E F of the curve. The part B D of the current curve throughout the greater portion of its length is approximately straight and the straight portion may be represented by the equation

$$I = I_0 - \frac{E}{R},$$

where E is the potential of the third electrode I_0 and R are constants, depending upon the characteristics of the particular device, and I is the electron current flowing to or away from the third electrode as

$$I_0 - \frac{E}{R}$$

is positive or negative. R corresponds to the resistance of an ordinary circuit except in this case it is a negative resistance. Thus it will be seen that there is a certain range through which the device may be operated in which the current received by the third electrode will vary inversely as the potential applied thereto. In the description which follows and in the claims the term "negative resistance" is used to designate a device having this characteristic.

In the system shown in Fig. 1 battery 4 furnishes a constant potential for the anode 9. The resistances and the potential applied thereto are preferably so adjusted that when the photo-electric cell 3 is not illuminated and hence there is no current flow therethrough there will be no current through either resistance. This may be accomplished by connecting the end of the resistance 1 to a point 17 in the battery 4, so chosen that the potential thereby applied to the third electrode 11 will correspond to the point C on the current curve. Since under these conditions no current will flow through the negative resistance there will not be any current through the positive resistance. The current through the positive resistance then under operating conditions may be represented by the straight line G which falls above or below the axis of ordinates, as indicated, with reversals in the potential applied thereto. The total current in the circuit or the current in the photo-electric cell will be the algebraic sum of the current through the two resistances. The algebraic sum of these two currents with varying potentials on the third electrode is indicated by the dotted line H. By making the two resistances approximately equal to each other in value so that the slope of curves A and G is approximately the same it will be seen that a very small change in the total current will cause a much greater change in the current through either of the two resistances and it will be apparent that the degree of amplification which can thus be secured will depend upon how closely the two resistances approach each other in value.

When the photo-electric cell is not influenced by any light source the portion 13 of battery 4 is open-circuited in so far as its effect on the current through either resistance is concerned. When the photo-electric cell is illuminated by any light source current starts to flow therethrough and there is, in effect, a potential applied to both the negative and positive resistances in parallel which is equal to the potential of the portion 13 of the battery 4 less the drop in potential through the photo-electric cell. Since the current through the photo-electric cell varies in proportion to the intensity of the illumination thereon this drop in potential will vary in proportion to the intensity of the illumination. The effect of the application of this potential, however, is not the same in both resistances. An inspection of the curves of Fig. 3 will show that a change in potential from that corresponding to point C will produce a current in one direction in the negative resistance and in the opposite direction in the positive resistance. Hence, it will be apparent that the result of applying the potential mentioned to the two resistances will be to produce a current which circulates between the two resistances and which does not flow through the photo-electric cell. The currents in the two resistances, however, will not be equal as the current in the resistance in which the current flows in the same direction as that in the photo-electric cell will be greater than the current in the other resistance by an amount equal to the current in the photo-electric cell. In other words the current through one of the resistances may be considered as made up of two parts; one part which flows through the photo-electric cell and one part which flows through the other resistance, while the current in the other resistance will be merely the current which circulates between the two resistances and does not pass through the photo-electric cell. It may be shown mathematically that the current through either resistance will bear substantially the same ratio to the current in the photo-electric cell that the value of the resistance bears to the difference between the two resistances.

In other words, the current in the recording instrument 14 or other desired device which may be inserted in series with the resistance 1 will bear the same ratio to the current in the photo-electric cell that the resistance 1 bears to the difference between the two resistances. This will be true irrespective of the nature of the current in the photo-electric cell, that is, whether it is a constant current or a pulsating current. The same amplifying action will also take place if a source of alternating current is substituted for the photo-electric cell 3. If the current is alternating the currents in the two resistances will reverse in direction at the same time that the total current reverses in direction as can be seen from curves A, G and H.

In the above description it has been assumed that the total current in the circuit starts from zero or changes in sign. It is not essential however that this should be the case as the same principle can equally well be applied to the amplification of small changes in unidirectional currents of relatively large magnitude. If the resistance 1 were connected, for example, to the same point in the battery as the cathode 6 the current through the positive resistance would be as indicated by the curve K and the total current in the circuit would follow the curve L. If then the total current in the circuit had such a value that it fell on the portion of the curve where the resistance 2 is negative, changes in current would be amplified in the same manner as in the case first described. By varying the point of connection of the resistance 1 to the battery it will be seen that the system can always be adjusted so that the total current in the circuit will fall upon a portion of the curve where the resistance 2 is negative.

The form of my invention illustrated in Fig. 2 differs from that shown in Fig. 1 in that the photo-electric cell is replaced by the secondary 15 of a transformer, the primary 16 of which may be supplied by a telephone current or any other variable current which it is desired to amplify.

In the above description and in the claims which follow, I have used such expressions as "current flow from cathode to third electrode" to designate the net electron current received by the third electrode, or the current which will flow in the external circuit between cathode and third electrode.

While I have described the preferred embodiment of my invention it will be apparent that many changes therein may be made without departing from the scope of the appended claims. For example, in case it is desired to measure or utilize amplified potential variations the device for accomplishing the desired purpose is connected in shunt to the resistance 1 instead of in series therewith. It will also be apparent that the device 14 indicated may assume a great variety of forms in accordance with the purpose which is to be accomplished.

What I claim as new and desire to secure by Letters Patent of the United States, is:—

1. Means for amplifying electrical variations comprising a positive resistance and a negative resistance in parallel therewith, the two resistances being approximately equal to each other in value.

2. Means for amplifying electrical variations comprising a device having positive resistance characteristics and a negative re-

sistance in parallel therewith, the two resistances being approximately equal to each other in value.

3. Means for amplifying electrical variations comprising a positive resistance, a negative resistance, and means for supplying the variations to be amplified to the two resistances in parallel.

4. Means for amplifying electrical variations comprising a negative resistance having a working range over which the current flow therethrough varies inversely as the potential applied thereto, a positive resistance, and means for supplying the variations which are to be amplified to the two resistances in parallel.

5. Means for amplifying electrical variations comprising a negative resistance having an electron emitting cathode, and having a working range over which the current flow varies inversely as the potential applied thereto, a positive resistance and means for supplying the electrical variations to be amplified to the two resistances in parallel.

6. Means for amplifying electrical variations comprising a negative resistance having an electron emitting cathode, an anode and a third electrode inclosed in a highly evacuated envelop, and having a working range over which the current flow from the cathode to the third electrode varies inversely as the potential applied thereto, a positive resistance and means for supplying the electrical variations which are to be amplified to the two resistances in parallel.

7. Means for amplifying electrical variations comprising a negative resistance having an electron emitting cathode, an anode, and a third electrode near the anode and so positioned with respect to the cathode and anode that it will receive electrons from the cathode when it is more positive than the cathode, and so that secondary electrons given off from the third electrode can readily reach the anode, a positive resistance, and means for applying the electrical variations which are to be amplified to the two resistances in parallel.

8. Means for amplifying electrical variations comprising a negative resistance, a positive resistance, and means for supplying electrical variations which are to be amplified to the two resistances in parallel, the two resistances being approximately equal to each other in value.

9. The method of amplifying electrical variations which consists in supplying variations which are to be amplified to a positive resistance and a negative resistance in parallel, and thereby producing amplified electrical variations in the positive resistance.

In witness whereof, I have hereunto set my hand this 6th day of November 1915.

ALBERT W. HULL.

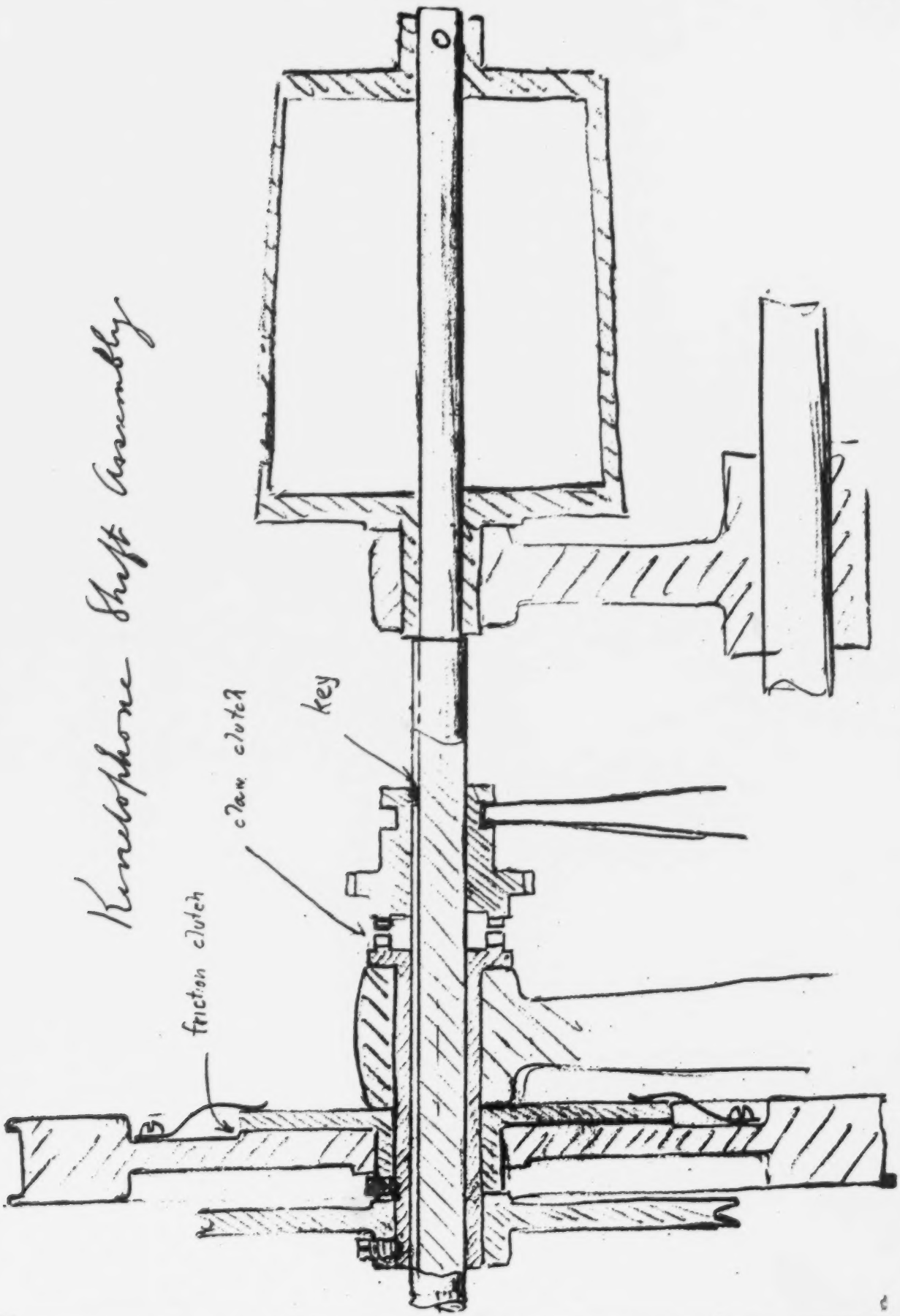
Kinetophone shaft Assembly
friction clutch
claw clutch
key

DEFENDANTS' EXHIBIT NO. 43.

Hoxie Combined Camera and Reproducer.

(Physical Exhibit.)

DEFENDANTS' EXHIBIT NO. 44.

Oscillograph Motor and Attached Flywheel.

(Physical Exhibit.)

DEFENDANTS' EXHIBIT NO. 45.

Hoxie Reproducer.

(Physical Exhibit.)

DEFENDANTS' EXHIBIT NO. 46.

Photo-Electrical Cell Similar to the Type Used Originally With the Preceding Hoxie Machines.

(Physical Exhibit.)

DEFENDANTS' EXHIBIT NO. 47.

Plitron Similar to That Used by Hoxie.

(Physical Exhibit.)

Feb. 1921			
7	48104-528	Submarine Radio set.	6
8	"	"	8-40
9	"	"	8-40
10	48104-338	Photo Electr. Reproducer	8-40
11		" " "	8-40
12		" " "	4-40
			48
14	48104-338	Photo Electr. Reproducer	8-40
15		" " "	8-40
16		" " "	8-40
17		" " "	8-40
18		" " "	8-40
19		" " "	4-40
			48
21	48104-338	Photo. Electr. Reproducer	8-40
22	" 108	Holiday.	8-40
23	" "	" "	8-40
24	" "	" "	8-40
25	" "	" "	8-40
26	" "	" "	4-40

698

50975

28 March	48104 338	Photo Electra Reproducer	8 40
2	"	" " "	8 40
3	"	" " "	8 40
4	"	" " "	8 40
5	"	" " "	7 40
			4 40
			40
6		"	
7	"	" " "	8 40
8	"	" " "	8 40
9	"	" " "	5 40
10	"	" " "	8 40
11	"	" " "	5 40
12	"	" " "	4 40
			40
14	"	" "	8 40
15	"	" "	5 40
16	"	" "	5 40
17	"	" "	5 40
18	"	" "	5 40
19			4 40
			48

March 21	48104-338	Photo Electr. Reproducer	8 40
22	"	"	8 40
23	"	"	5 40
24	"	"	8 40
25	"	"	8 40
26	"	"	11 40
			118
28	48104-338		8-40
29	"		8-40
30	"		5-40
31	" -338		8-40
April 1	" 338		8-40
2	" -108		11-40
4	48104-338	Photo Elect Reproducer	8-40
5	"	"	8-40
6	"	"	8-40
7	"	"	8-40
8	"	"	8-40
9	"	"	11-40

April 11	48104-333	Photo Electr. Reproducer	$ 40
12	"	" " "	8 "
13	"	" " "	5 40
14	"	" " "	5 40
15	"	" " "	5 40
16	"	" " "	4 40
			47
18	"	Phonograph Recording Service	5 40
19	"	" " "	5 40
20	"	" " "	5 40
21	"	" " "	8 40
22	"	" " "	8 40
23	"	" " "	4 40
			[illegible]
25	"	" " "	8-40
26	"	" " "	8-40
27	"	" " "	8-40
28	"	" " "	8-40
29	"	" " "	4-40
30	"		47

DEFENDANTS' EXHIBIT NO. 49.

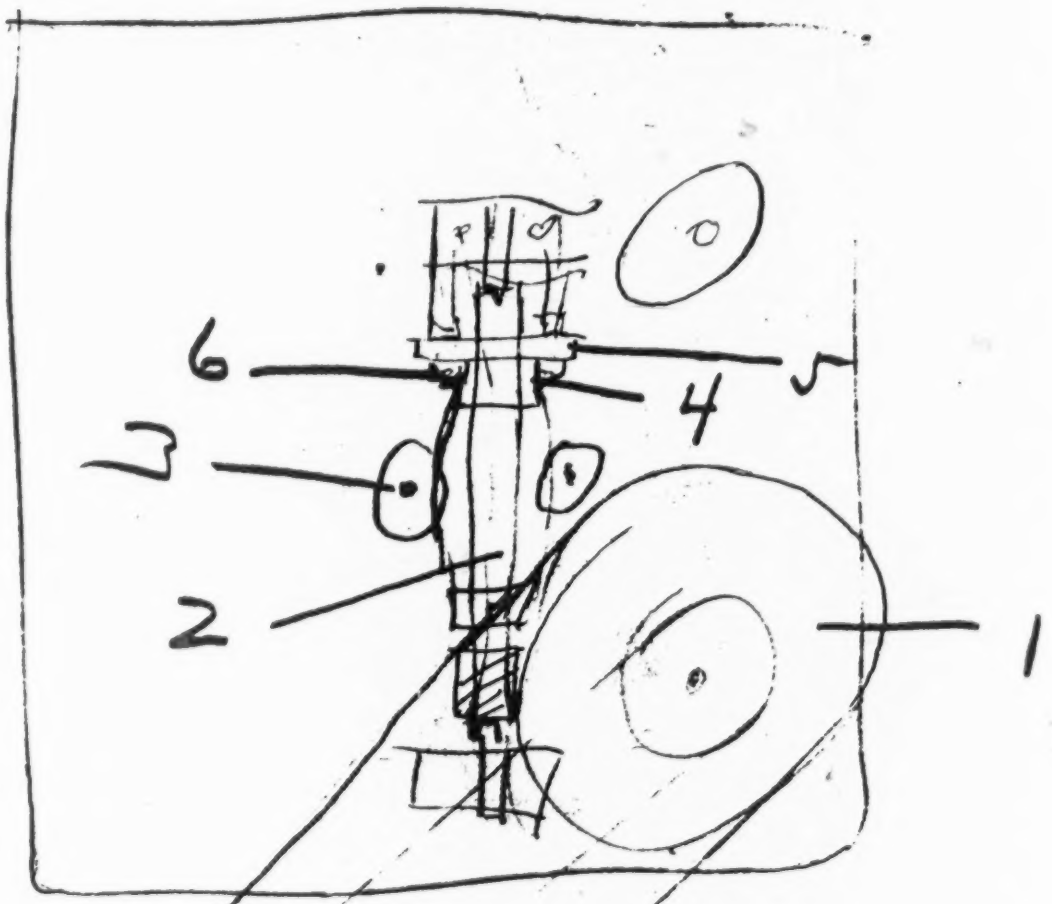

U. S. DISTRICT COURT
M. D. PENN.
DEFT. EX. 49

DEFENDANTS' EXHIBIT NO. 50

D Ex. 50 2

Producing Permanent Record of Voice or Music.
By Means of Special Vibrator in Combination With Photo Cell

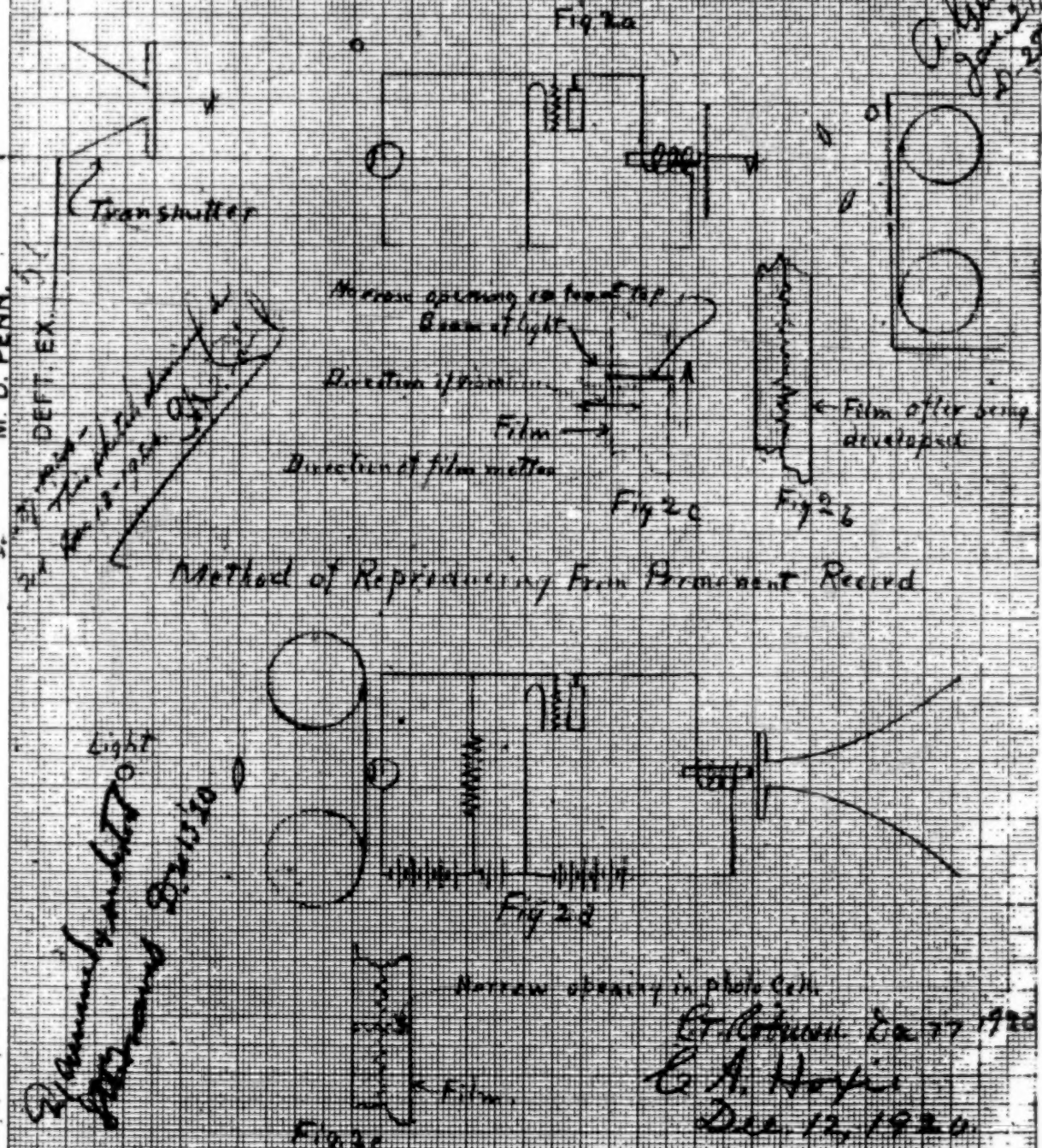

Method of Reproducing From Permanent Record

C. A. Hoxie
Dec. 12, 1920.

The above in combination with the moving picture machine may produce what is known as "Talking Pictures."

THIS MARGIN RESERVED FOR BINDING.
IF SHEET IS READ THIS WAY ... DISTRICT COURT
IF SHEET IS READ THE OTHER WAY (VERTICALLY), THIS MUST BE ... HAND SIDE.
M. D. PENN.
DEFT. EX.

DEFENDANTS' EXHIBIT NO. 51.

Original Hoxie Record Entitled "A New Type of Phonograph," Record Dated March 9, 1921.

(Physical Exhibit.)

704

DEFENDANTS' EXHIBIT NO. 52.

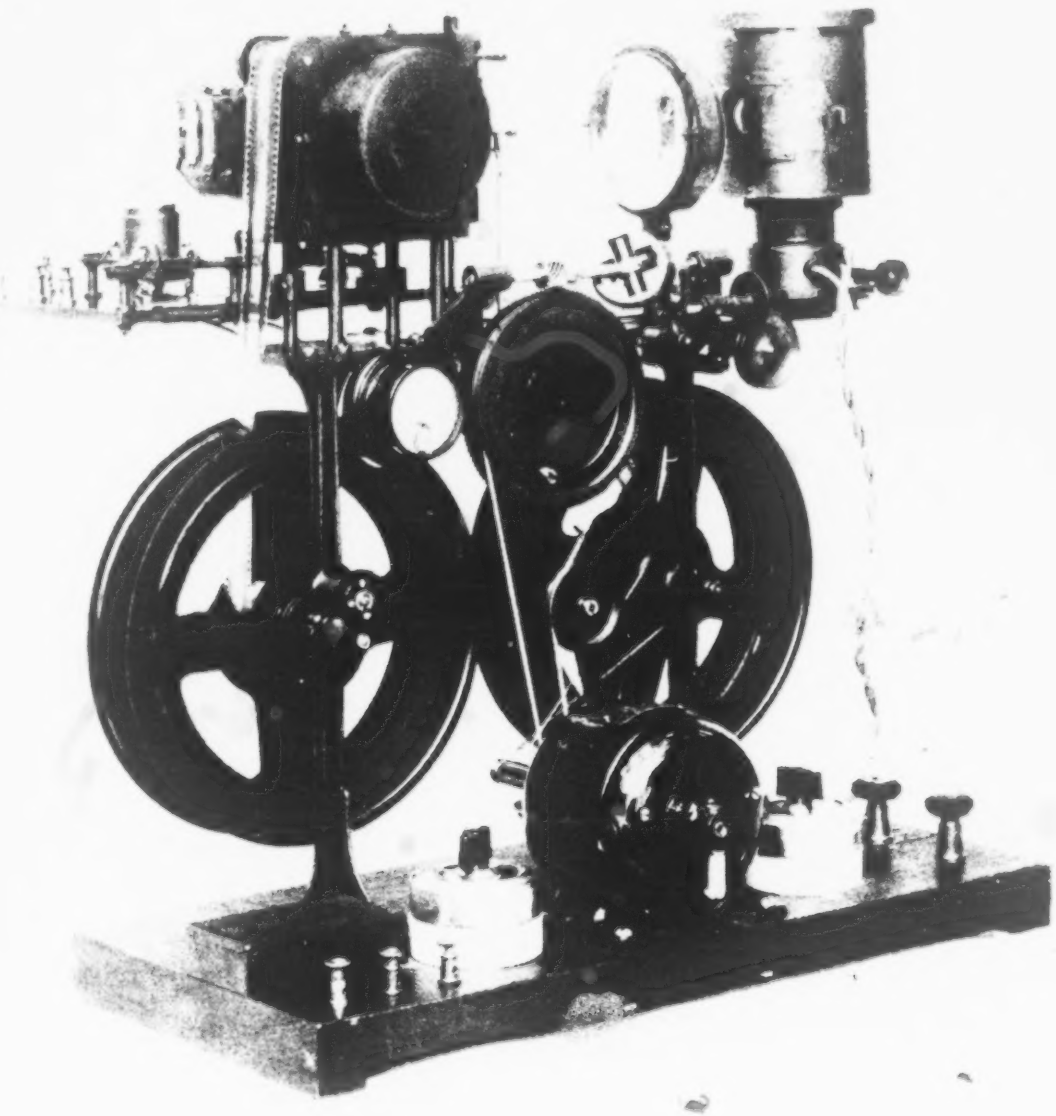

116072 REPRODUCER FOR SOUND ON FILM 7 21 21
INDEX E 369

DEFENDANTS' EXHIBIT NO. 53.

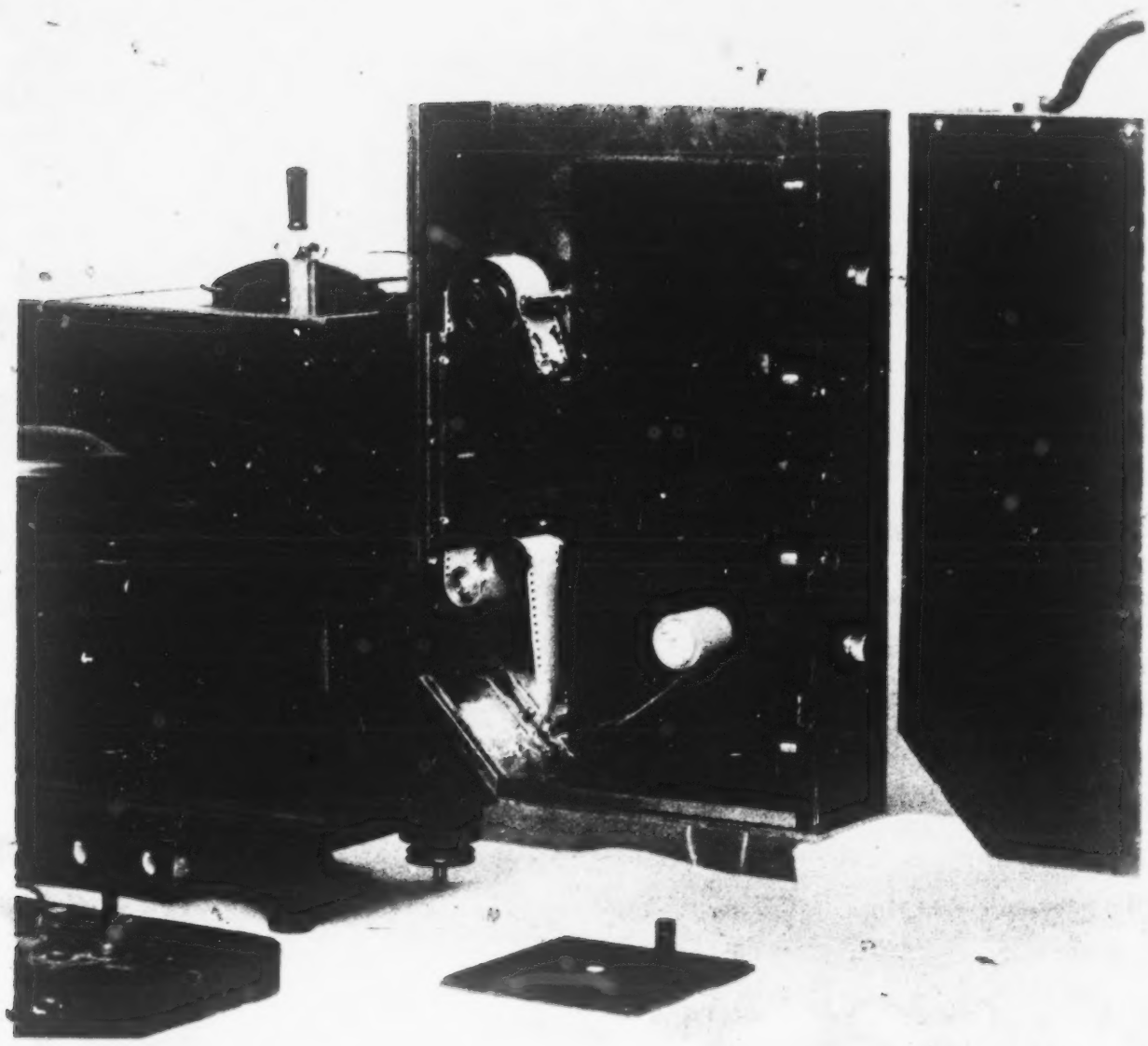

116688 CONTINUOUS RECORDING ATTACHMENT FOR THE OSCILLOGRAPH (INTERNAL ARRANGEMENT)

INDEX E 369

12 1 21

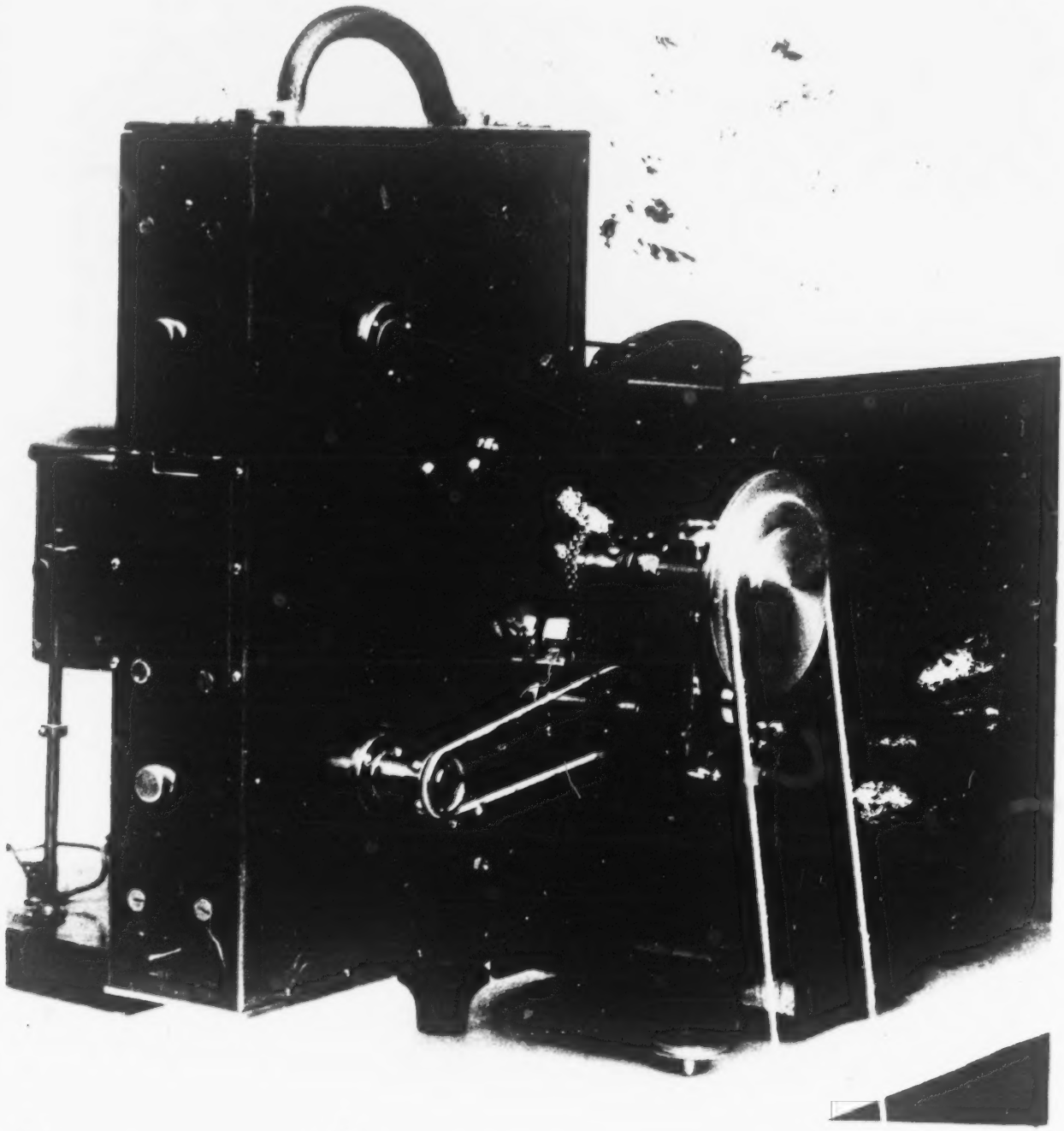

116687 CONTINUOUS RECORDING ATTACHMENT FOR THE OSCILLOGRAPH.

INDEX E-369 12 1 21

DEFENDANTS' EXHIBIT NO. 55.

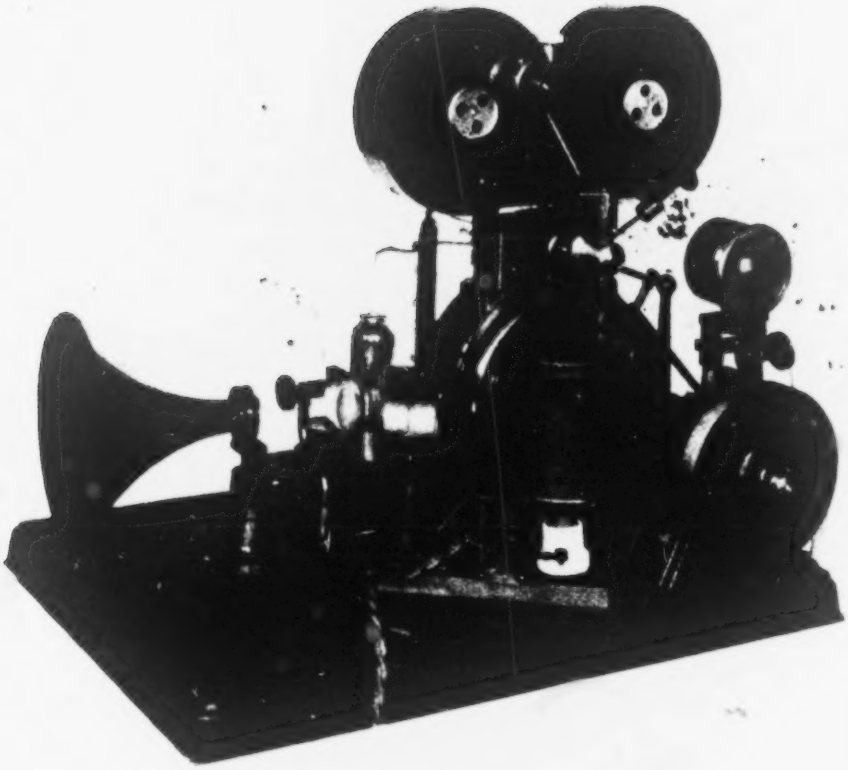

118879

PALLOPHOTOPHONE RECORDER

INDEX 694

1 11 23

DEFENDANTS' EXHIBIT NO. 56.

118878

PALLOPHOTOPHONE REPRODUCER.
INDEX 694

1 11 23

ANNO II. -- No. 49 New York, Domenica 18 Febbraio 1923 Greater New York 5 Cents. Altrove 8 Cents

CORRIERE D'AMERICA

SEGUENDO IL SOLE

S. DISTHICT C
ENN.
DEPT. EX

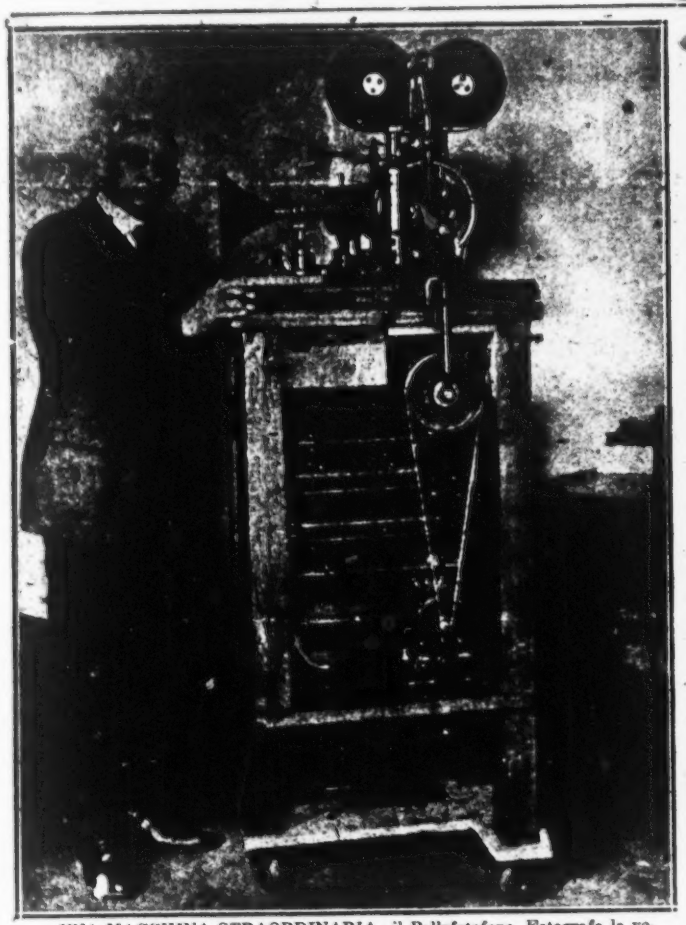

UNA MACCHINA STRAORDINARIA: il Pallofotofono. Fotografa la voce umana. Le vibrazioni della parola fanno oscillare una luce i cui movimenti sono cinematografati. Poi le vibrazioni registrate dalla fotografia sono ritrasformate perfettamente ir voce. Le esperienze sono definitive. La fotografia mostra l'inventore, Carlo A. Hoxie, e la sua macchina.

UN PERFETTO RITRATTO DI HARDING. Par di vedere un Presidente vero vicino ad una signorina... dipinta. Invece è un Presidente dipinto, vicino alla pittrice, signorina Margherita Lindsay Williams, inglese, di fama mondiale, venuta espressamente in America per compire quest'opera.

710

DEFENDANTS' EXHIBIT NO. 57.

DEFENDANTS' EXHIBIT NO. 58.

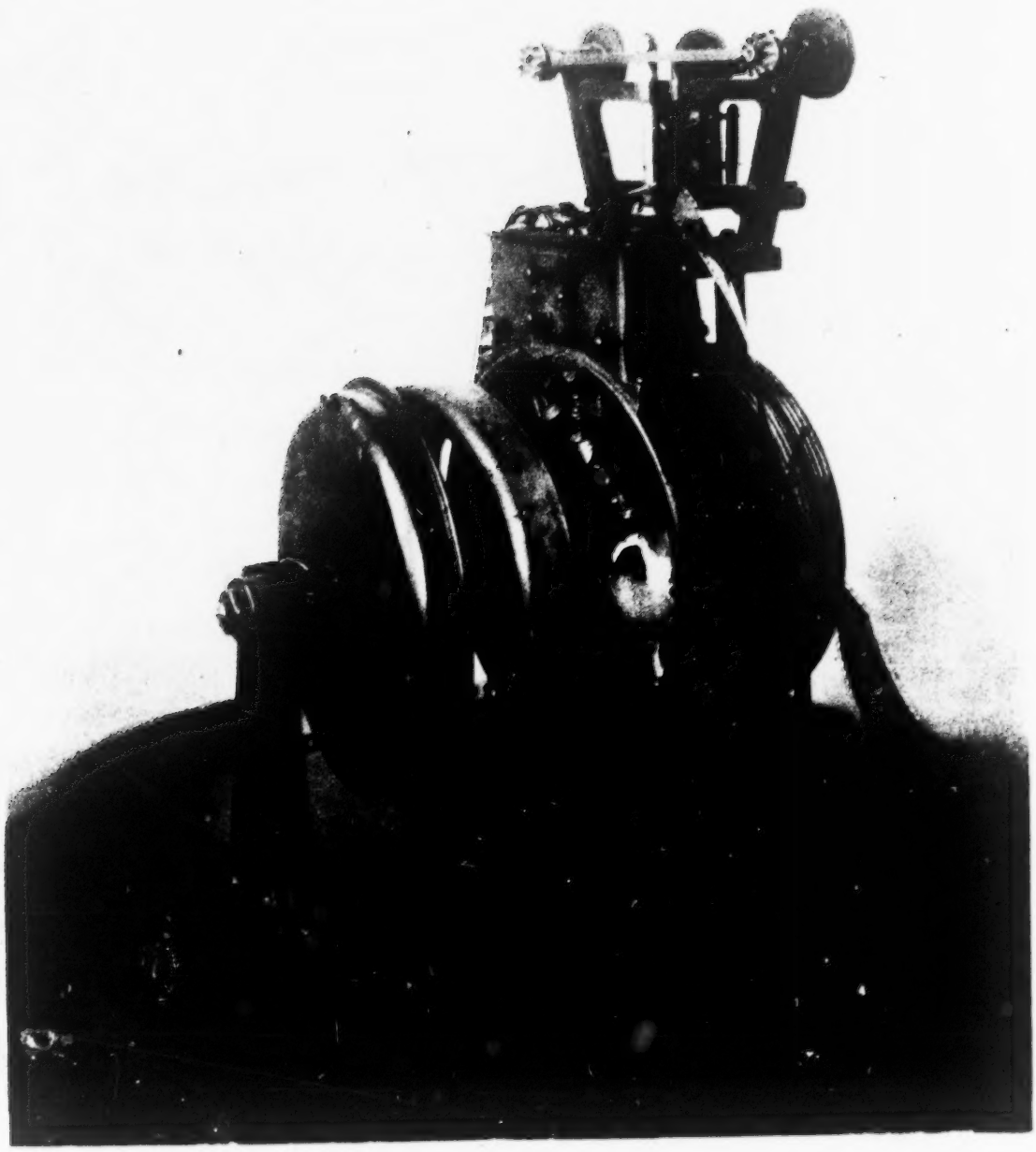

505093

PALLOPHOTOPHONE CONSTRUCTION.

535.86 4-17-28

DEFENDANTS' EXHIBIT NO. 59.

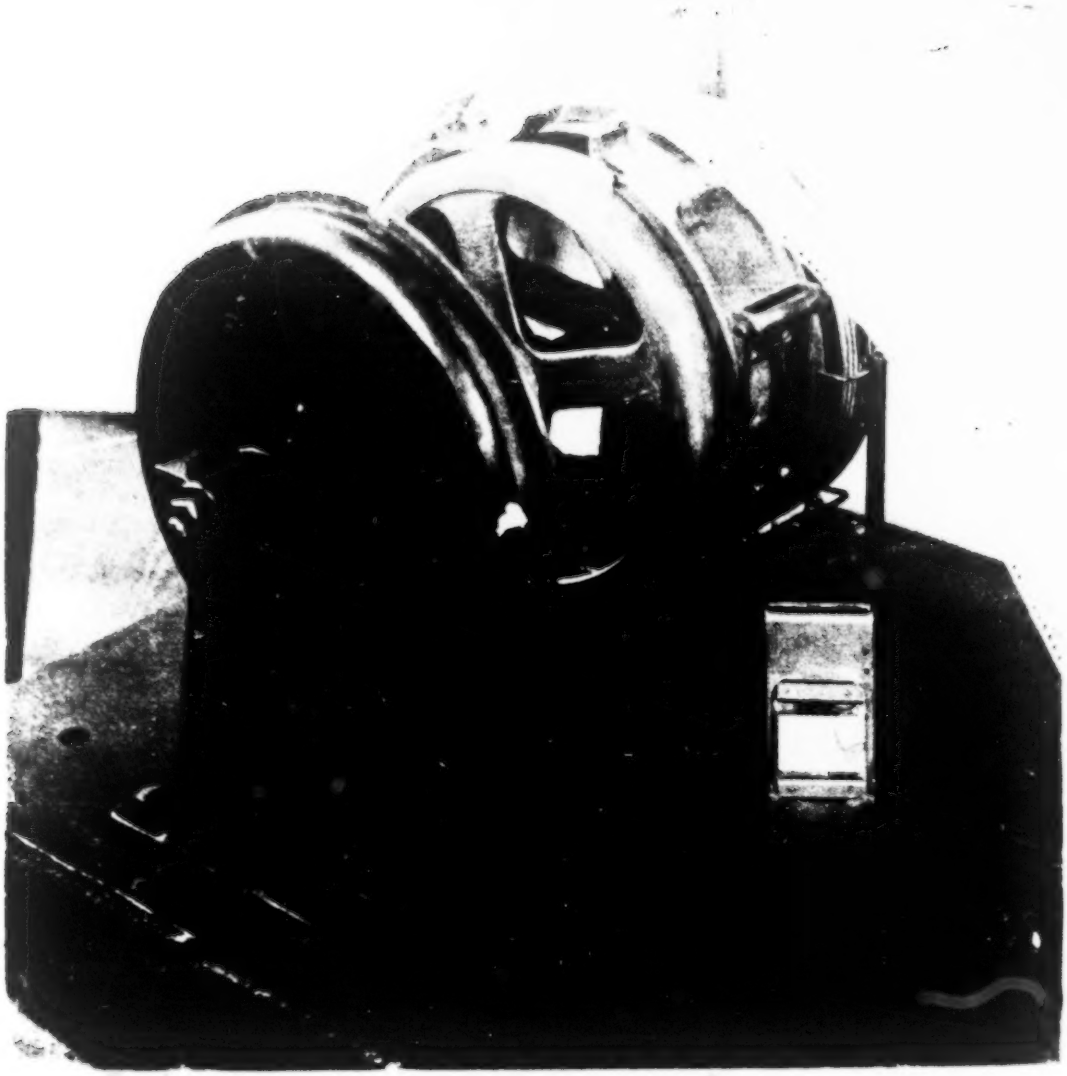

505092 PALLOPHOTOPHONE CONSTRUCTION.

535.86 4-17-28

DEFENDANTS' EXHIBIT NO. 60.

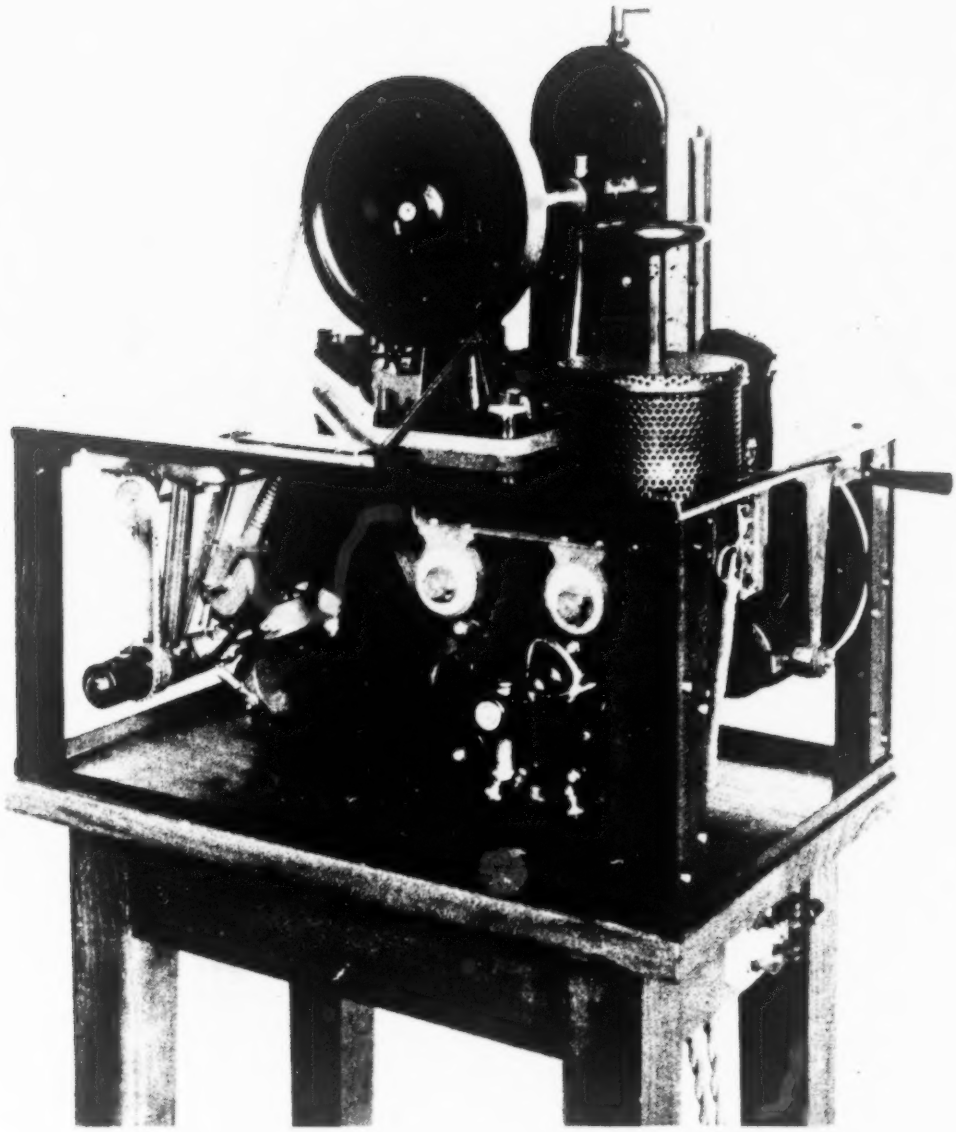

120231 PALLOPHOTOPHONE RECORDER MODEL NO. 205. INTERIOR VIEW FROM LEFT SIDE.

INDEX E-369 7 6 23

DEFENDANTS' EXHIBIT NO. 61.

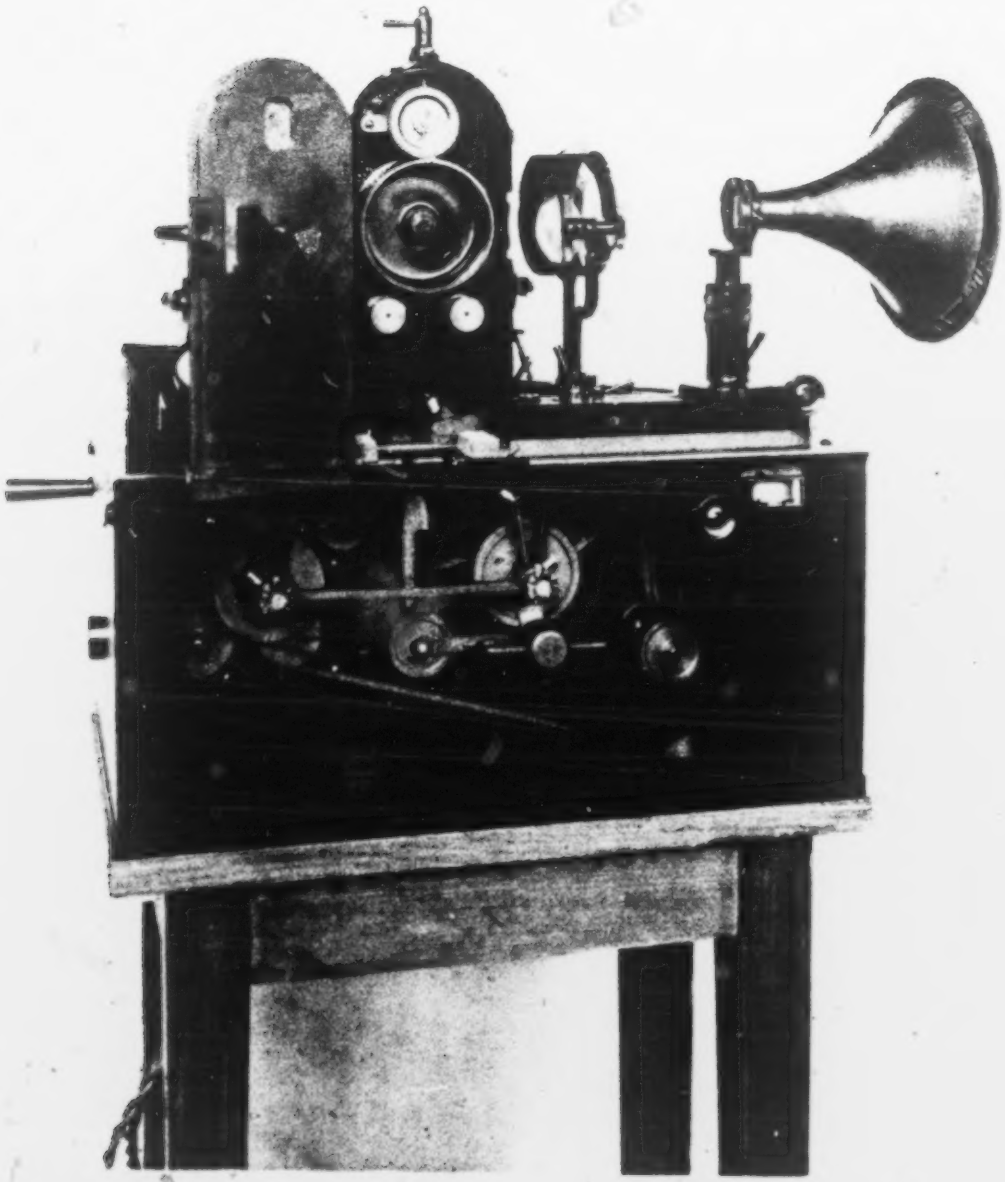

120232 PALLOPHOTOPHONE RECORDER MODEL NO. 205. INTERIOR VIEW FROM RIGHT SIDE.

INDEX E-369 7 6 23

DEFENDANTS' EXHIBIT NO. 62.

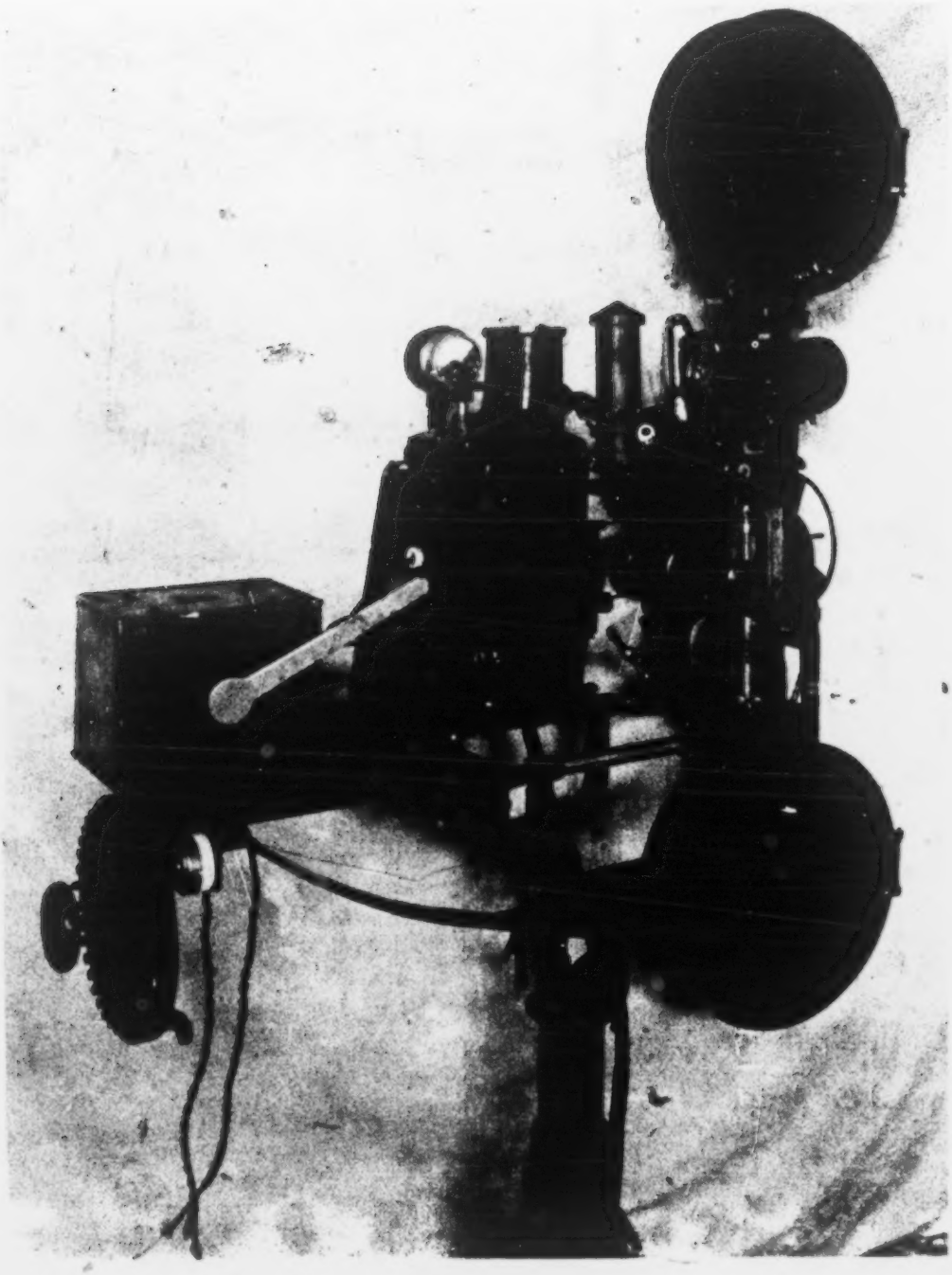

120490 "STANDARD" MOTION PICTURE PROJECTOR EQUIPPED FOR REPRODUCING SOUND WITH PICTURES. (SEE G.L. SHEETS 36388)

INDEX 535.86 8 28 23

DEFENDANTS' EXHIBIT NO. 63.

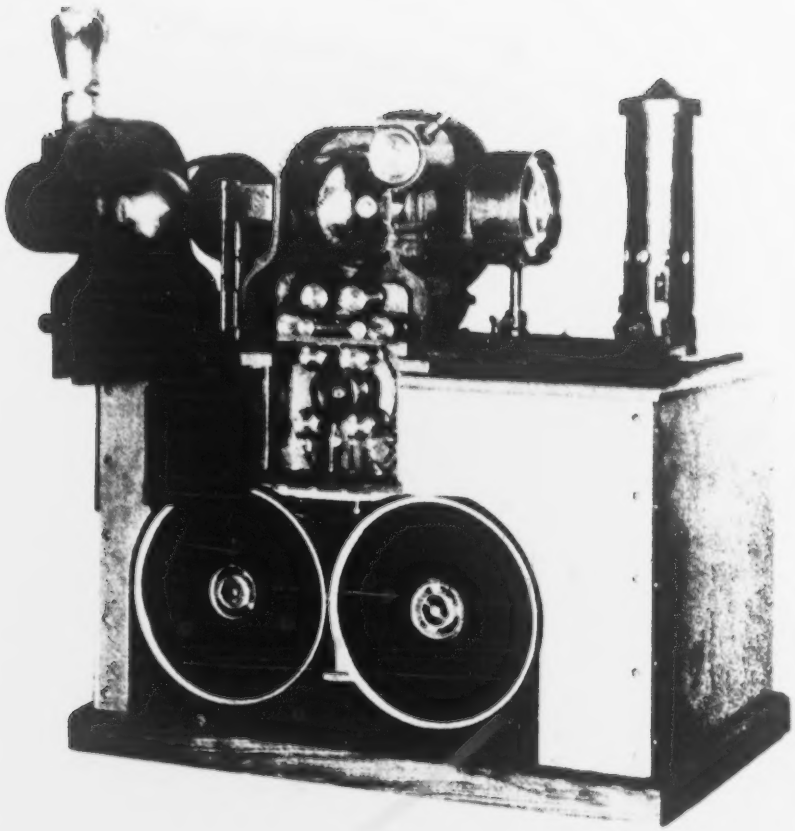

435433 PALLOPHOTOPHONE - REPRODUCER. FRONT VIEW SHOWING PATH OF FILM.

INDEX 654 1 28 26

DEFENDANTS' EXHIBIT NO. 64.

500215 TALKING MOTION PICTURE RECORDER. MODEL 291.

INDEX 684 7 13 26

DEFENDANTS' EXHIBIT NO. 65.

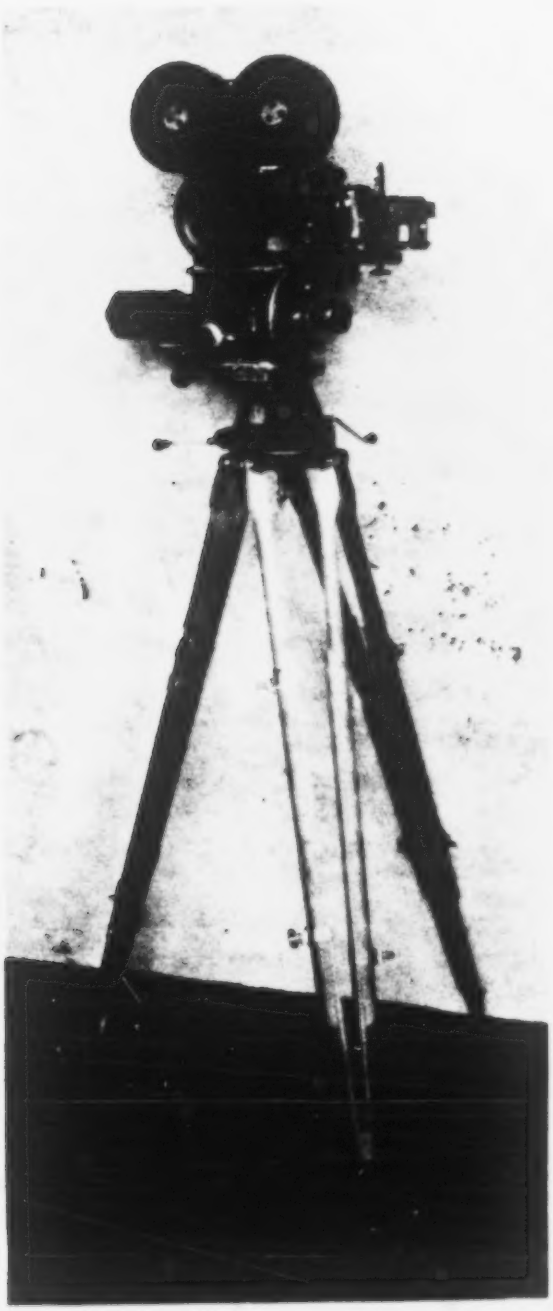

500216 TALKING MOTION PICTURE RECORDER. MODEL 291.

INDEX 694 7 13 26

DEFENDANTS' EXHIBIT NO. 66.

500166 RECORDING AND REPRODUCING APPARATUS EMPLOYED IN CONNECTION WITH FIRST OFFICIAL DEMONSTRATION OF TALKING MOTION PICTURES, INCIDENTAL MUSIC, ETC.

INDEX 664

7-7-26

DEFENDANTS' EXHIBIT NO. 67.

GENERAL ELECTRIC COMPANY, SCHENECTADY, N.Y., U.S.A.

THIS MARGIN RESERVED FOR BINDING.

IF SHEET IS READ THIS WAY (HORIZONTALLY), THIS MUST BE TOP
IF SHEET IS READ THE OTHER WAY (VERTICALLY), THIS MUST BE LEFT-HAND SIDE.

RCA Victor Photophone Recording System

U. S. DISTRICT COURT
M. D. PENN.
DEFT. EX. 68

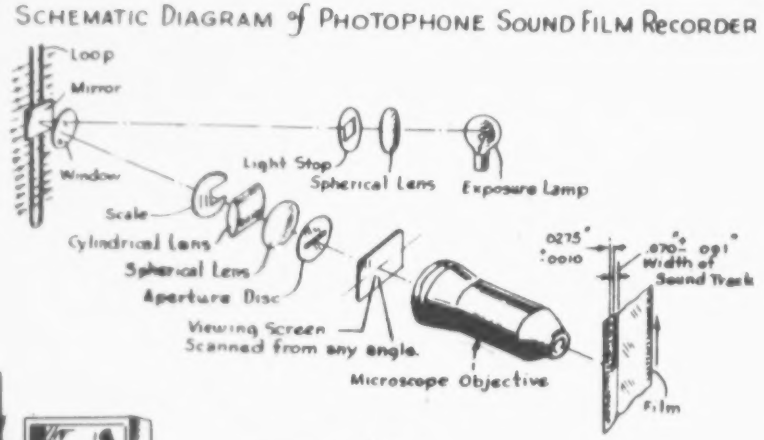

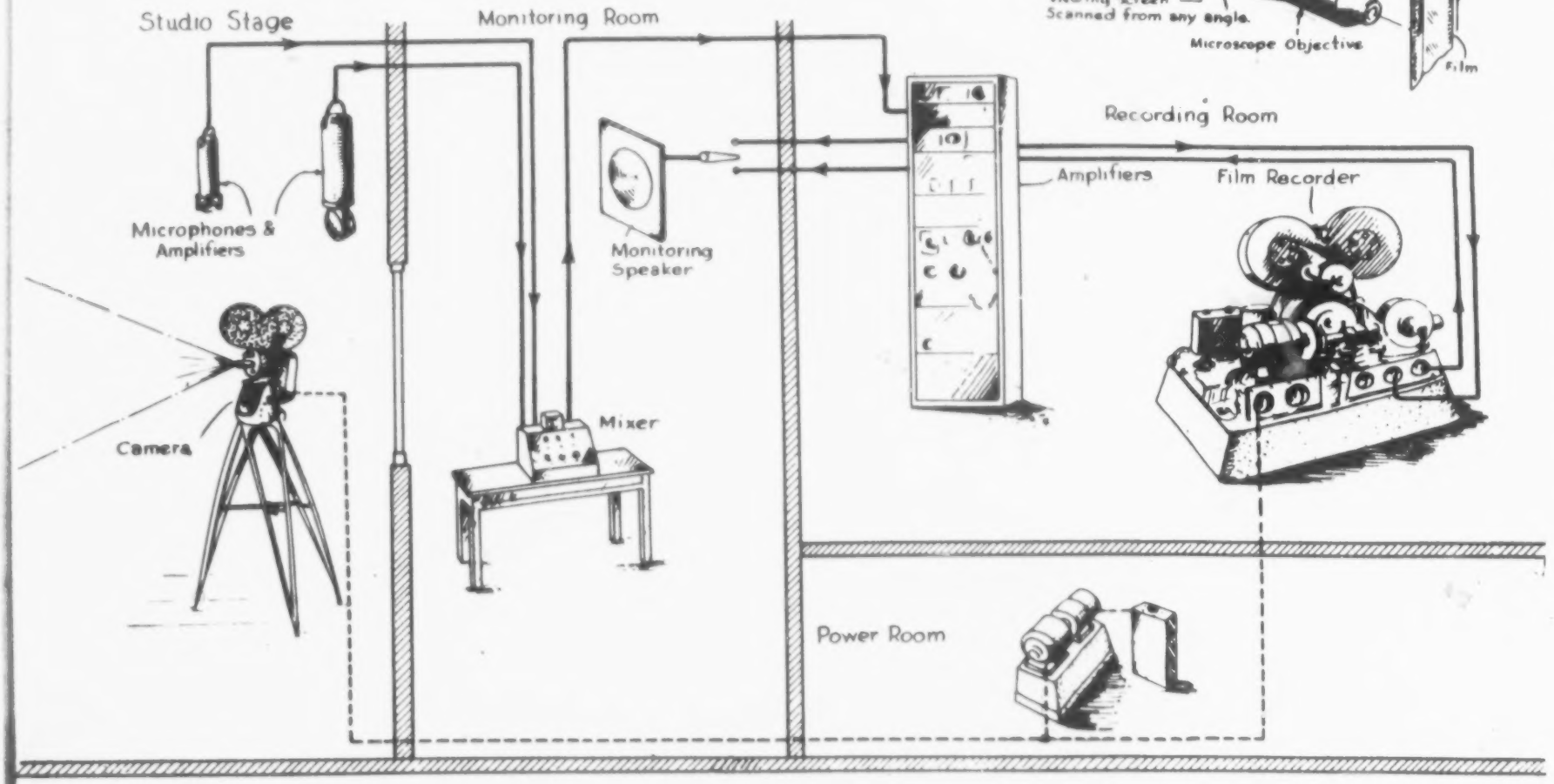

DEFENDANTS' EXHIBIT NO. 68.

S. DISTRICT COURT
M. D. PENN.
DEFT. EX. 69

RCA Victor Photophone Reproducing System

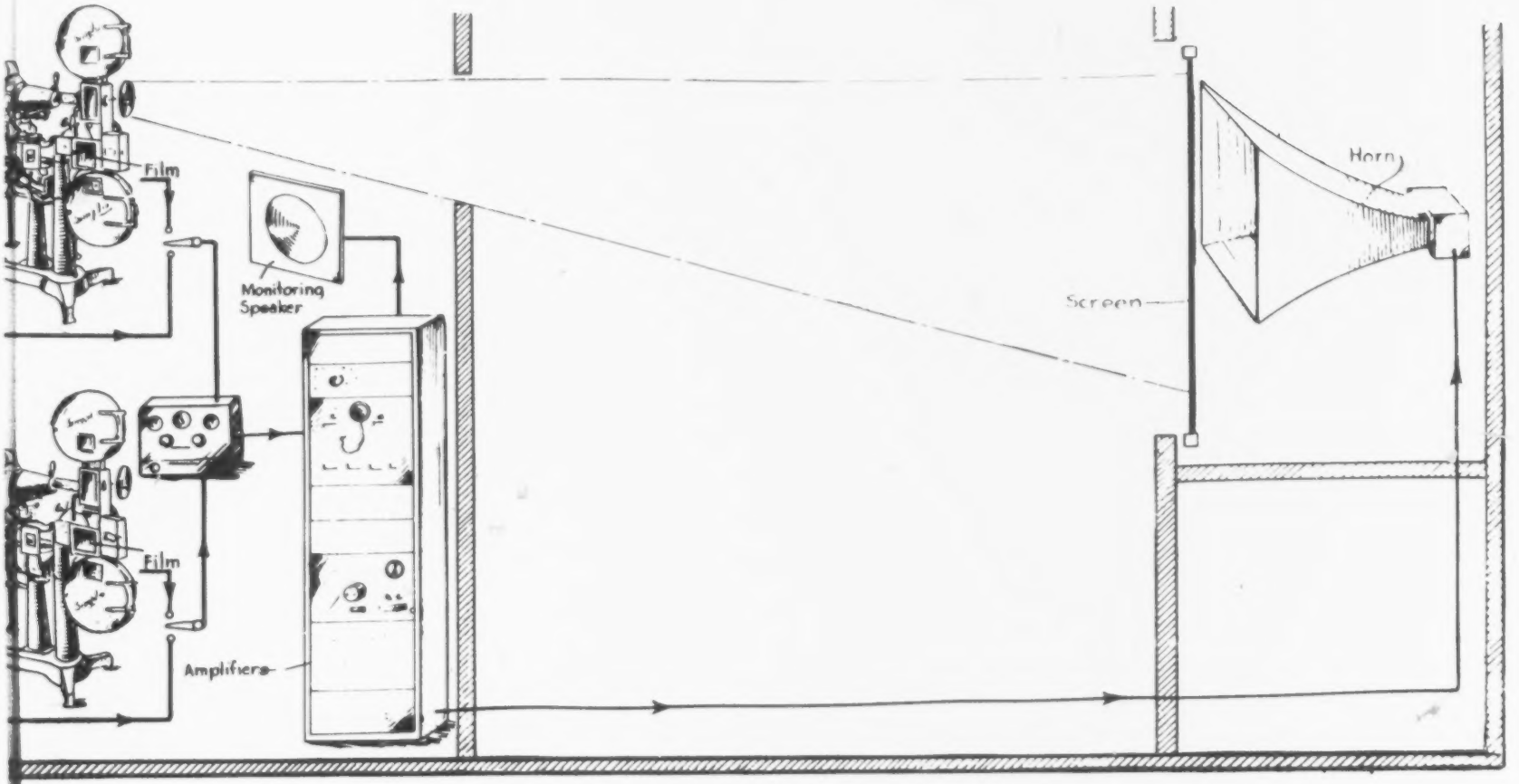

DEFENDANTS' EXHIBIT NO. 69

B. DISTRICT COURT
M. D. PENN.
DEFT. EX. 69

RCA Victor Photophone Reproducing System

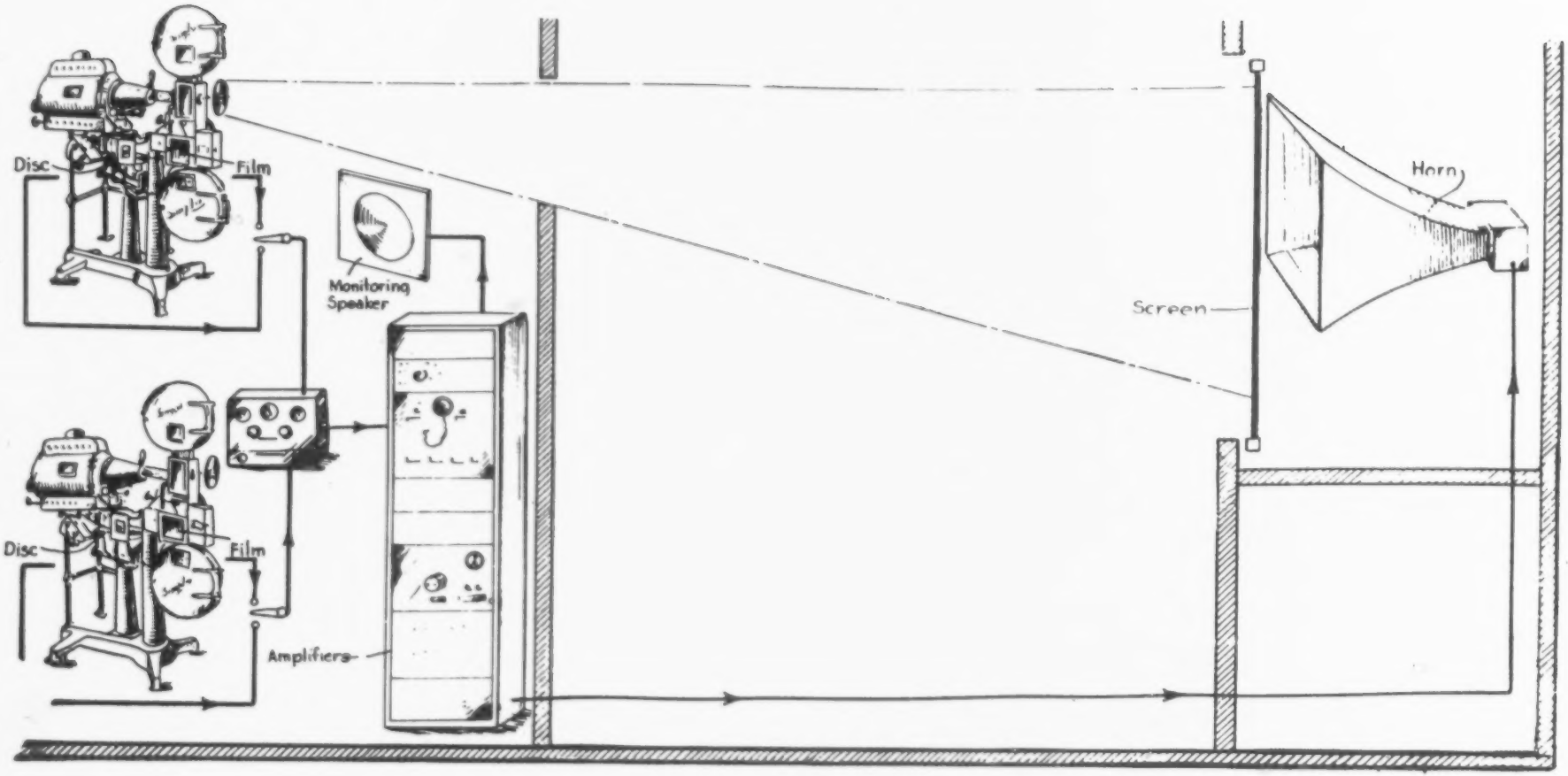

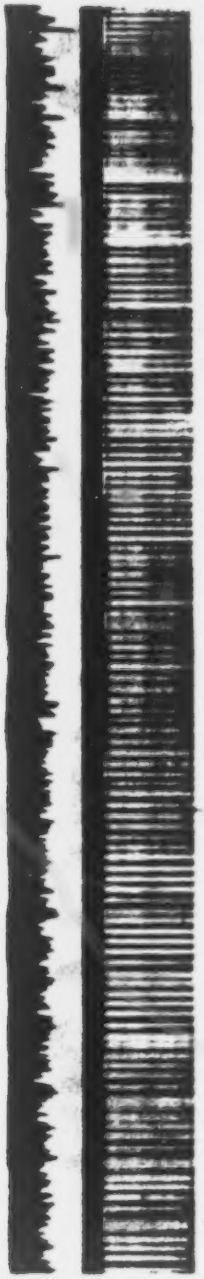

U. S. DISTRICT COURT
M. D. PENN.
DEFT. EX.

DEFENDANTS' EXHIBIT NO. 71.

A MANUAL

OF

MACHINERY AND MILLWORK.

BY

WILLIAM JOHN MACQUORN RANKINE,

CIVIL ENGINEER; LL.D. TRIN. COLL. DUB.; F.R.S.S. LOND. AND EDIN.; F.R.S.S.A.;
LATE REGIUS PROFESSOR OF CIVIL ENGINEERING AND MECHANICS IN THE UNIVERSITY OF GLASGOW.

With Numerous Diagrams.

FIFTH EDITION: THOROUGHLY REVISED,

BY

WILLIAM J. MILLAR, C.E.,

SECRETARY, INST. ENGINEERS AND SHIPBUILDERS IN SCOTLAND.

LONDON:
CHARLES GRIFFIN AND COMPANY,
EXETER STREET, STRAND.
1883.

[*The Right of Translation Reserved.*]

the acute angle which its surface makes with that direction; then the result of equation 2 is to be multiplied by

$$\frac{2 \sin^2 i}{1 + \sin^2 i} \quad \text{.....(3.)}$$

It appears that the resistance of a fan with several vanes increases nearly in proportion to the number of vanes, so long as their distances apart are not less at any point than their lengths. Beyond that limit the law is uncertain.

SECTION II.—*Of Fly-Wheels.*

357. **Periodical Fluctuations of Speed** in a machine (*A. M.*, 689) are caused by the alternate excess and deficiency of the energy exerted above the work performed in overcoming resisting forces, which produce an alternate increase and diminution of actual energy, according to the law explained in Article 330, page 373.

To determine the greatest fluctuation of speed in a machine moving periodically, take A B C, in fig. 255, to represent the motion of the driving point during one period; let the effort P of the prime mover at each instant be represented by the ordinate of the curve D G E I F; and let the sum of the resistances, reduced to the driving point as in Article 305, at each instant, be denoted by R, and represented by the ordinate of the curve D H E K F, which cuts the former curve at the ordinates A D, B E, C F. Then the integral,

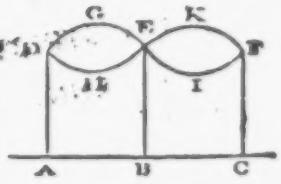

Fig. 255.

$$\int (P - R)\, ds,$$

being taken for any part of the motion, gives the excess or deficiency of energy, according as it is positive or negative. For the entire period A B C, this integral is nothing. For A B, it denotes an *excess of energy received*, represented by the area D G E H; and for B C, an equal *excess of work performed*, represented by the equal area E K F I. Let those equal quantities be each represented by $\triangle$ E. Then the actual energy of the machine attains a maximum value at B, and a minimum value at A and C, and $\triangle$ E is the difference of those values.

Now let v_0 be the mean velocity, v_1 the greatest velocity, v_2 the least velocity of the driving point, and $\Sigma \cdot n^2 W$ the *reduced inertia* of the machine (see Article 315, page 362); then

$$\frac{v_1^2 - v_2^2}{2g} \cdot \Sigma \cdot n^2 W = \triangle E; \text{ ....(1.)}$$

which, being divided by the *mean actual energy*,

$$\frac{v_0^2}{2g} \cdot \Sigma \cdot n^2 W = E_0,$$

gives

$$\frac{v_1^2 - v_2^2}{v_0^2} = \frac{\Delta E}{E_0}; \quad \ldots\ldots\ldots\ldots\ldots\ldots\ldots\ldots (2.)$$

and observing that $v_0 = (v_1 + v_2) \div 2$, we find

$$\frac{v_1 - v_2}{v_0} = \frac{\Delta \cdot E}{2 E_0} = \frac{g \Delta E}{v_0^2 \Sigma \cdot n^2 W}; \quad \ldots\ldots\ldots\ldots\ldots (3.)$$

a ratio which may be called the *co-efficient of fluctuation of speed* or of *unsteadiness*.

The ratio of the periodical excess and deficiency of energy ΔE to the whole energy exerted in one period or revolution, $\int P\, ds$, has been determined by General Morin for steam engines under various circumstances, and found to be from $\frac{1}{10}$ to $\frac{1}{4}$ for single-cylinder engines. For a pair of engines driving the same shaft, with cranks at right angles to each other, the value of this ratio is about one-fourth, and for three engines with cranks at 120°, one-twelfth of its value for single-cylinder engines.

The following table of the ratio, $\Delta E \div \int P\, ds$, for *one revolution* of steam engines of different kinds is extracted and condensed from General Morin's works:—

NON-EXPANSIVE ENGINES.

Length of connecting rod / Length of crank	=	8	6	5	4
$\Delta E \div \int P\, ds$	=	·105	·118	·125	·133

EXPANSIVE CONDENSING ENGINES.

Connecting rod = crank × 5.

Fraction of stroke at which steam is cut off,	$\frac{1}{3}$	$\frac{1}{4}$	$\frac{1}{5}$	$\frac{1}{6}$	$\frac{1}{7}$	$\frac{1}{8}$
$\Delta E \div \int P\, ds$ =	.163	·173	·178	·184	·189	·191

EXPANSIVE NON-CONDENSING ENGINES.

Steam cut off at	$\frac{1}{2}$	$\frac{1}{3}$	$\frac{1}{4}$	$\frac{1}{5}$
$\Delta E \div \int P\, ds =$	·160	·186	·209	·232

For double-cylinder expansive engines, the value of the ratio $\Delta E \div \int P\, ds$ may be taken as equal to that for single-cylinder non-expansive engines.

For *tools working at intervals*, such as punching, slotting, and plate-cutting machines, coining presses, &c., ΔE is nearly equal to the whole work performed at each operation.

358. **Fly-Wheels.** (*A. M.*, 690.)—A fly-wheel is a wheel with a heavy rim, whose great moment of inertia being comprehended in the reduced moment of inertia of a machine, reduces the co-efficient of fluctuation of speed to a certain fixed amount, being about $\frac{1}{32}$ for ordinary machinery, and $\frac{1}{50}$ or $\frac{1}{60}$ for machinery for fine purposes.

Let $\frac{1}{m}$ be the intended value of the co-efficient of fluctuation of speed, and ΔE, as before, the fluctuation of energy. If this is to be provided for by the moment of inertia, I, of the fly-wheel alone, let a_0 be its mean angular velocity; then equation 3 of Article 357 is equivalent to the following:—

$$\frac{1}{m} = \frac{g\,\Delta E}{a_0^2\,I}; \quad \text{.....(1.)}$$

$$I = \frac{m\,g\,\Delta E}{a_0^2}; \quad \text{.....(2.)}$$

the second of which equations gives the requisite moment of inertia of the fly-wheel.

The fluctuation of energy may arise either from variations in the effort exerted by the prime mover, or from variations in the resistance, or from both those causes combined. When but one fly-wheel is used, it should be placed in as direct connection as possible with that part of the mechanism where the greatest amount of the fluctuation originates; but when it originates at two or more points, it is best to have a fly-wheel in connection with each of those points.

For example, let there be a steam engine which drives a shaft that traverses a workshop, having at intervals upon it pulleys for driving various machine-tools. The steam engine should have a

fly-wheel of its own, as near as practicable to its crank, adapted to that value of ΔE which is due to the fluctuations of the effort applied to the crank-pin above and below the mean value of that effort, and which may be computed by the aid of General Morin's tables, quoted in Article 357; and each machine-tool should also have a fly-wheel, adapted to a value of ΔE equal to the whole work performed by the tool at one operation.

As the rim of a fly-wheel is usually heavy in comparison with the arms, it is often sufficiently accurate for practical purposes to take the moment of inertia as simply equal to the weight of the rim multiplied by the square of the mean between its outside and inside radii—a calculation which may be expressed thus:—

$$I = W r^2; \quad \ldots\ldots\ldots\ldots\ldots\ldots\ldots\ldots\ldots\ldots (3.)$$

whence the weight of the rim is given by the formula—

$$W = \frac{m g \Delta E}{a_1^2 r^2} = \frac{m g \Delta E}{v^2}, \quad \ldots\ldots\ldots\ldots\ldots\ldots (4.)$$

if v be the velocity of the rim of the fly-wheel.

In millwork the ordinary values of the product $m g$, the unit of time being the second, lie between 1,000 and 2,000 feet, or approximately between 300 and 600 mètres. In pumping-machinery it is sometimes only about 300 feet, or 90 mètres.

The rim of the fly-wheel of a factory steam engine is very often provided with teeth, or with a belt, in order that it may directly drive the machinery of the factory.

SECTION III.—*Of Governors.*

359. The **Regulator** of a prime mover is some piece of apparatus by which the rate at which it receives energy from the source of energy can be varied; such as the sluice or valve which adjusts the size of the orifice for supplying water to a water-wheel, the apparatus for varying the surface exposed to the wind by windmill sails, the throttle-valve which adjusts the opening of the steam pipe of a steam engine, the damper which controls the supply of air to its furnace, and the expansion gear which regulates the volume of steam admitted into the cylinder at each stroke of the piston.

In prime movers whose speed and power have to be frequently and rapidly varied at will, such as locomotives and winding engines for mines, the regulator is adjusted by hand. In other cases the regulator is adjusted by means of a self-acting instrument driven by the prime mover to be regulated, and called a GOVERNOR.

The special construction of the different kinds of regulators is a subject for a treatise on prime movers. In the present treatise it

DEFENDANTS' EXHIBIT NO. 72.

Model Demonstrated by Witness Waterman to Show Damping of Springs and Phonograph Turntables.

(Physical Exhibit.)

DEFENDANTS' EXHIBIT NO. 73.

File Wrapper and Contents of Edison Patent No. No. 227,679, Granted May 18, 1880.

(Physical Exhibit.)

DEFENDANTS' EXHIBITS NOS. 74 AND 75 CONSOLIDATED.

INDEX TO DEFENDANTS' EXHIBITS 74 and 75.

Prior Patents and Publications.

UNITED STATES PATENTS.

	Record Page
200,521, Edison, February 19, 1878	731b
210,249, Gally, November 26, 1878	735
227,679, Edison, May 18, 1880	739
299,013, Robb, May 20, 1884	747
341,213, Bell & Tainter, May 4, 1886	751
341,214, Bell & Tainter, May 4, 1886	763
341,288, Tainter, May 4, 1886	779
364,472, Bock, June 7, 1887	801
386,974, Edison, July 31, 1888	807
458,916, Oxley, September 1, 1891	821
499,879, Edison, June 20, 1893	825
502,382, Randall, August 1, 1893	845
513,095, Edison, January 23, 1894	857
534,543, Berliner, February 19, 1895	865
551,946, Cooley, December 24, 1895	881
565,657, Ader, August 11, 1896	887
587,527, Holst, August 3, 1897	895
597,875, Clark, January 25, 1898	903
602,453, Jones, April 19, 1898	911
605,484, Jones, June 14, 1898	915
691,667, Rowland, January 21, 1902	923
724,645, Wood, April 7, 1903	935
939,692, Holman, November 9, 1909	941
995,390, Underhill, June 13, 1911	945
1,065,576, Amet, June 24, 1913	967
1,075,692, Cannock, October 14, 1913	979
1,085,443, Lanchester, January 27, 1914	985
1,135,436, Chabeault, April 13, 1915	989
1,162,433, Amet, November 30, 1915	999
1,165,629, Schneider, December 28, 1915	1009
1,186,069, Bair, June 6, 1916	1021
1,186,982, Hall, June 13, 1916	1033
1,203,190, Fritts, October 31, 1916	1041
1,221,407, Amet, April 3, 1917	1075
1,246,217, Andersen, November 13, 1917	1081
1,255,143, Ebeling, February 5, 1918	1087
1,256,613, Terwilliger, February 19, 1918	1097
1,261,797, Ebeling, April 9, 1918	1101
1,273,328, Cameron, July 23, 1918	1111

Record Page

1,273,627, Langmuir, July 23, 1918 1127
1,317,450, Momyer, September 30, 1919 1133
1,355,523, Arthur, October 12, 1920 1143
1,366,446, Collins, January 25, 1921 1147
1,367,863, Clark, February 8, 1921 1155
1,381,474, Kunz, June 14, 1921 1161
1,388,515, Clark, August 23, 1921 1173
1,425,177, Constable, August 8, 1922 1185
1,447,913, Trowbridge, et al., March 6, 1923 1189
1,473,976, Ries, November 13, 1923 1215
1,567,424, Compton, December 29, 1925 1227
1,607,480, Ries, November 16, 1926 1231
1,710,677, Cawley, April 23, 1929 1249
1,825,438, Cawley, September 29, 1931 1253
1,825,439, Cawley, September 29, 1931 1263
1,825,440, Cawley, September 29, 1931 1275
1,825,441, Cawley, September 29, 1931 1289
1,878,577, Cawley, September 20, 1932 1295

BRITISH PATENTS.

1,644, Edison, of 1878 1303
2,814, Jamieson, et al., of 1884 1319
21,371, Baron, of 1898 1324
24,546, Duddell, of 1902 1335
15,333, Royce, of 1912 1341
115,942, Pedersen, of 1918 1346

FRENCH PATENTS.

393,301, Fabbrica, etc., Parlate, 1908 1350
10,377, Fabbrica, etc., Parlate, 1909 1361
414,788, Comp. Gen. de Phon., 1910 1371
472,467, Dragoumis, 1914 1379

GERMAN PATENT.

141,634, Kher, 1903 1387

PUBLICATIONS.

Scientific American, June 18, 1881, page 394 1397
Proceedings of the Physical Society, Vol. XXXII, 1920, pages 78 to 81, incl. 1398
The Electric Journal, Vol. XI, No. 5, May, 1914, pages 262 and 263 1404
Physical Review, Vol. 10, No. 2, August, 1917, pages 205 and 206 1407

732

T A. EDISON.

Phonograph or Speaking Machine.

No. 200,521. Patented Feb. 19, 1878.

Fig. 1.

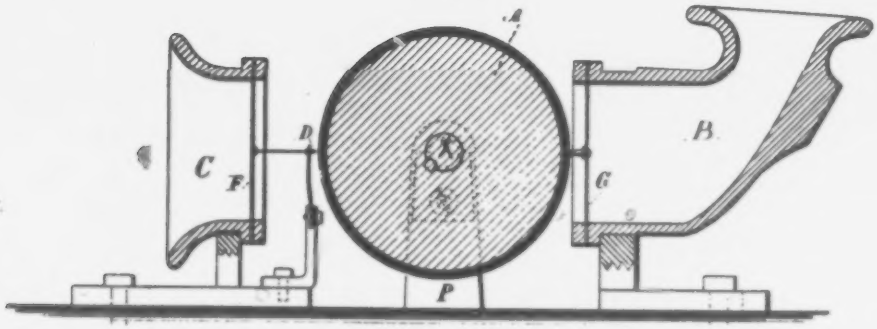

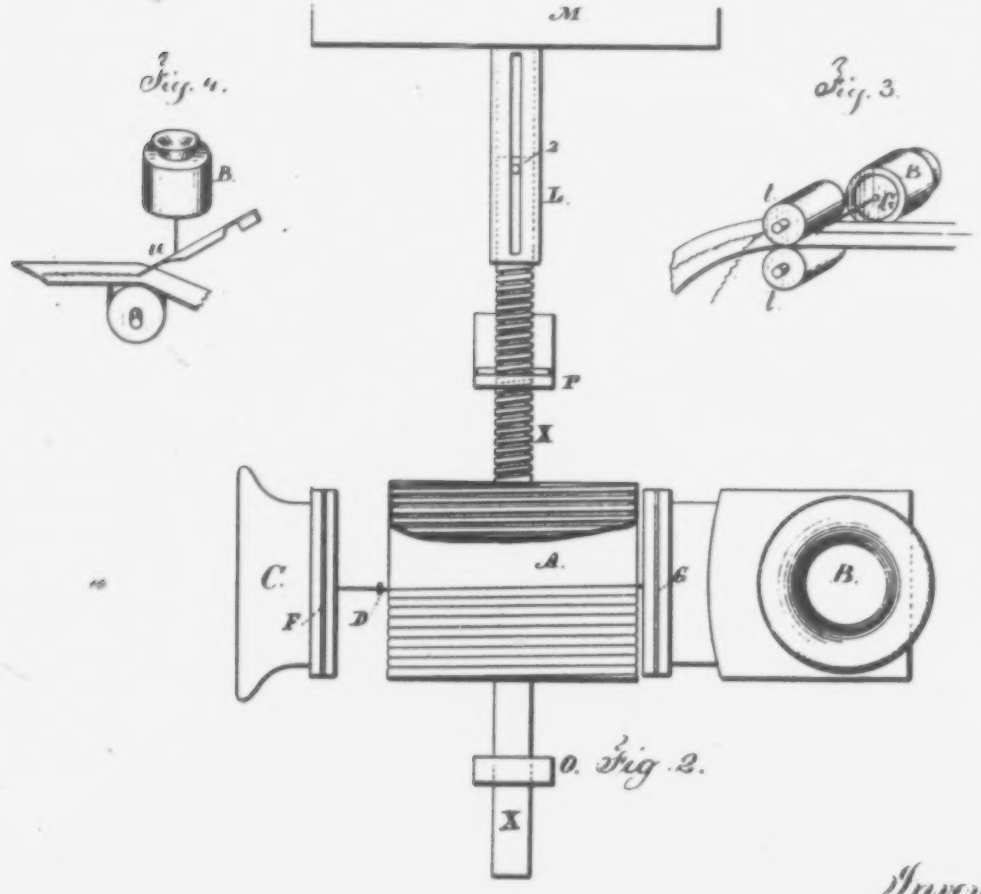

Fig. 4.

Fig. 3.

Fig. 2.

Witnesses

Chas. H. Smith

Inventor

Thomas A. Edison.

UNITED STATES PATENT OFFICE.

THOMAS A. EDISON, OF MENLO PARK, NEW JERSEY.

IMPROVEMENT IN PHONOGRAPH OR SPEAKING MACHINES.

Specification forming part of Letters Patent No. **200,521**, dated February 19, 1878; application filed December 24, 1877.

To all whom it may concern:

Be it known that I, THOMAS A. EDISON, of Menlo Park, in the county of Middlesex and State of New Jersey, have invented an Improvement in Phonograph or Speaking Machines, of which the following is a specification:

The object of this invention is to record in permanent characters the human voice and other sounds, from which characters such sounds may be reproduced and rendered audible again at a future time.

The invention consists in arranging a plate, diaphragm, or other flexible body capable of being vibrated by the human voice or other sounds, in conjunction with a material capable of registering the movements of such vibrating body by embossing or indenting or altering such material, in such a manner that such register-marks will be sufficient to cause a second vibrating plate or body to be set in motion by them, and thus reproduce the motions of the first vibrating body.

The invention further consists in the various combinations of mechanism to carry out my invention.

I have discovered, after a long series of experiments, that a diaphragm or other body capable of being set in motion by the human voice does not give, except in rare instances, superimposed vibrations, as has heretofore been supposed, but that each vibration is separate and distinct, and therefore it becomes possible to record and reproduce the sounds of the human voice.

In the drawings, Figure 1 is a vertical section, illustrating my invention, and Fig. 2 is a plan of the same.

A is a cylinder having a helical indenting-groove cut from end to end—say, ten grooves to the inch. Upon this is placed the material to be indented, preferably metallic foil. This drum or cylinder is secured to a shaft, X, having at one end a thread cut with ten threads to the inch, the bearing P also having a thread cut in it.

L is a tube, provided with a longitudinal slot, and it is rotated by the clock-work at M, the object of the long slot being to allow the shaft X to pass endwise through the center or support P by the action of the screw on X. At the same time that the cylinder is rotated it passes toward the support O.

B is the speaking-tube or mouth-piece, which may be of any desired character, so long as proper slots or holes are provided to re-enforce the hissing consonants. Devices to effect this object are shown in my application, No. 143, filed August 28, 1877. Hence they are not shown or further described herein.

Upon the end of the tube or mouth-piece is a diaphragm, having an indenting-point of hard material secured to its center, and so arranged in relation to the cylinder A that the point will be exactly opposite the groove in the cylinder at any position the cylinder may occupy in its forward rotary movement.

The speaking-tube is arranged upon a standard, which, in practice, I provide with devices for causing the tube to approach and recede from the cylinder.

The operation of recording is as follows: The cylinder is, by the action of the screw in X, placed adjacent to the pillar P, which brings the indenting-point of the diaphragm G opposite the first groove on the cylinder, over which is placed a sheet of thick metallic foil, paper, or other yielding material. The tube B is then adjusted toward the cylinder until the indenting-point touches the material and indents it slightly. The clock-work is then set running, and words spoken in the tube B will cause the diaphragm to take up every vibration, and these movements will be recorded with surprising accuracy by indentations in the foil.

After the foil on the cylinder has received the required indentations, or passed to its full limit toward O, it is made to return to P by proper means, and the indented material is brought to a position for reproducing and rendering audible the sounds that had been made by the person speaking into the tube B.

C is a tube similar to B, except that the diaphragm is somewhat lighter and more sensitive, although this is not actually necessary.

T A. EDISON.

Phonograph or Speaking Machine.

No. 200,521. Patented Feb. 19, 1878.

Fig. 1.

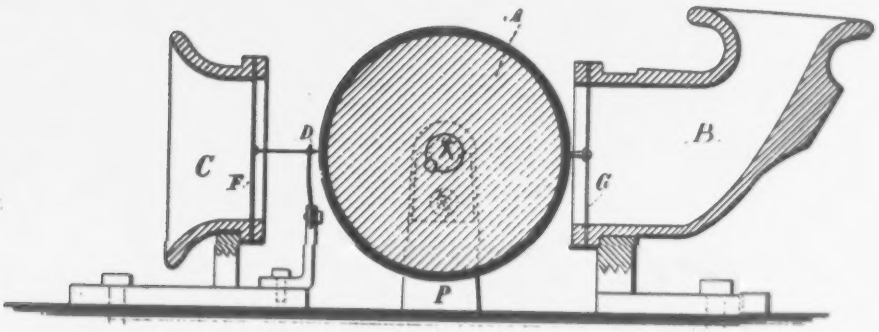

Fig. 4.

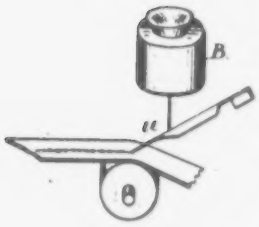

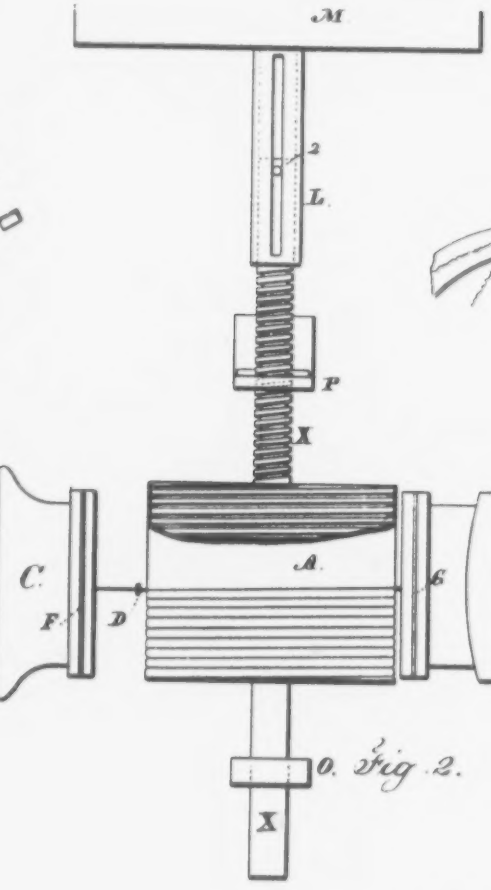

Fig. 3.

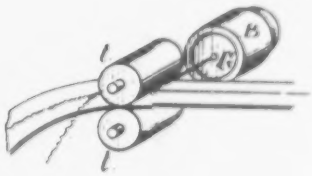

Fig. 2.

Witnesses

Chas. H. Smith

Harold Serrell

Inventor

Thomas A. Edison.

per Samuel A. Serrell

Atty.

UNITED STATES PATENT OFFICE.

THOMAS A. EDISON, OF MENLO PARK, NEW JERSEY.

IMPROVEMENT IN PHONOGRAPH OR SPEAKING MACHINES.

Specification forming part of Letters Patent No. **200,521**, dated February 19, 1878; application filed December 24, 1877.

To all whom it may concern:

Be it known that I, THOMAS A. EDISON, of Menlo Park, in the county of Middlesex and State of New Jersey, have invented an Improvement in Phonograph or Speaking Machines, of which the following is a specification:

The object of this invention is to record in permanent characters the human voice and other sounds, from which characters such sounds may be reproduced and rendered audible again at a future time.

The invention consists in arranging a plate, diaphragm, or other flexible body capable of being vibrated by the human voice or other sounds, in conjunction with a material capable of registering the movements of such vibrating body by embossing or indenting or altering such material, in such a manner that such register-marks will be sufficient to cause a second vibrating plate or body to be set in motion by them, and thus reproduce the motions of the first vibrating body.

The invention further consists in the various combinations of mechanism to carry out my invention.

I have discovered, after a long series of experiments, that a diaphragm or other body capable of being set in motion by the human voice does not give, except in rare instances, superimposed vibrations, as has heretofore been supposed, but that each vibration is separate and distinct, and therefore it becomes possible to record and reproduce the sounds of the human voice.

In the drawings, Figure 1 is a vertical section, illustrating my invention, and Fig. 2 is a plan of the same.

A is a cylinder having a helical indenting-groove cut from end to end—say, ten grooves to the inch. Upon this is placed the material to be indented, preferably metallic foil. This drum or cylinder is secured to a shaft, X, having at one end a thread cut with ten threads to the inch, the bearing P also having a thread cut in it.

L is a tube, provided with a longitudinal slot, and it is rotated by the clock-work at M, or other source of power.

The shaft X passes into the tube L, and it is rotated by a pin, 2, secured to the shaft, and passing through the slot on the tube L, the object of the long slot being to allow the shaft X to pass endwise through the center or support P by the action of the screw on X. At the same time that the cylinder is rotated it passes toward the support O.

B is the speaking-tube or mouth-piece, which may be of any desired character, so long as proper slots or holes are provided to re-enforce the hissing consonants. Devices to effect this object are shown in my application, No. 143, filed August 28, 1877. Hence they are not shown or further described herein.

Upon the end of the tube or mouth-piece is a diaphragm, having an indenting-point of hard material secured to its center, and so arranged in relation to the cylinder A that the point will be exactly opposite the groove in the cylinder at any position the cylinder may occupy in its forward rotary movement.

The speaking-tube is arranged upon a standard, which, in practice, I provide with devices for causing the tube to approach and recede from the cylinder.

The operation of recording is as follows: The cylinder is, by the action of the screw in X, placed adjacent to the pillar P, which brings the indenting-point of the diaphragm G opposite the first groove on the cylinder, over which is placed a sheet of thick metallic foil, paper, or other yielding material. The tube B is then adjusted toward the cylinder until the indenting-point touches the material and indents it slightly. The clock-work is then set running, and words spoken in the tube B will cause the diaphragm to take up every vibration, and these movements will be recorded with surprising accuracy by indentations in the foil.

After the foil on the cylinder has received the required indentations, or passed to its full limit toward O, it is made to return to P by proper means, and the indented material is brought to a position for reproducing and rendering audible the sounds that had been made by the person speaking into the tube B.

C is a tube similar to B, except that the diaphragm is somewhat lighter and more sensitive, although this is not actually necessary. In front of this diaphragm is a light spring, D, having a small point shorter and finer than the indenting-point on the diaphragm of B. This spring and point are so arranged as to fall

exactly into the path of all the indentations. This spring is connected to the diaphragm F of C by a thread or other substance capable of conveying the movements of D. Now, when the cylinder is allowed to rotate, the spring D is set in motion by each indentation corresponding to its depth and length. This motion is conveyed to the diaphragm either by vibrations through a thread or directly by connecting the spring to the diaphragm F, and these motions being due to the indentations, which are an exact record of every movement of the first diaphragm, the voice of the speaker is reproduced exactly and clearly, and with sufficient volume to be heard at some distance.

The indented material may be detached from the machine and preserved for any length of time, and by replacing the foil in a proper manner the original speaker's voice can be reproduced, and the same may be repeated frequently, as the foil is not changed in shape if the apparatus is properly adjusted.

The record, if it be upon tin-foil, may be stereotyped by means of the plaster-of-paris process, and from the stereotype multiple copies may be made expeditiously and cheaply by casting or by pressing tin-foil or other material upon it. This is valuable when musical compositions are required for numerous machines.

It is obvious that many forms of mechanism may be used to give motion to the material to be indented. For instance, a revolving plate may have a volute spiral cut both on its upper and lower surfaces, on the top of which the foil or indenting material is laid and secured in a proper manner. A two-part arm is used with this disk, the portion beneath the disk having a point in the lower groove, and the portion above the disk carrying the speaking and receiving diaphragmic devices, which arm is caused, by the volute spiral groove upon the lower surface, to swing gradually from near the center to the outer circumference of the plate as it is revolved, or vice versa.

An apparatus of this general character adapted to a magnet that indents the paper is shown in my application for a patent, No. 128, filed March 26, 1877; hence no claim is made herein to such apparatus, and further description of the same is unnecessary.

A wide continuous roll of material may be used, the diaphragmic devices being reciprocated by proper mechanical devices backward and forward over the roll as it passes forward; or a narrow strip like that in a Morse register may be moved in contact with the indenting-point, and from this the sounds may be reproduced. The material employed for this purpose may be soft paper saturated or coated with parafline or similar material, with a sheet of metal foil on the surface thereof to receive the impression from the indenting-point.

I do not wish to confine myself to reproducing sound by indentations only, as the transmitting or recording device may be in a sinuous form, resulting from the use of a thread passing with paper beneath the pressure-rollers *t*, (see Fig. 3,) such thread being moved laterally by a fork or eye adjacent to the roller *t*, and receiving its motion from the diaphragm G, with which such fork or eye is connected, and thus record the movement of the diaphragm by the impression of the thread in the paper to the right and left of a straight line, from which indentation the receiving-diaphragm may receive its motion and the sound be reproduced, substantially in the manner I have already shown; or the diaphragm may, by its motion, give more or less pressure to an inking-pen, *u*, Fig. 4, the point of which rests upon paper or other material moved along regularly beneath the point of the pen, thus causing more or less ink to be deposited upon the material, according to the greater or lesser movement of the diaphragm. These ink-marks serve to give motion to a second diaphragm when the paper containing such marks is drawn along beneath the end of a lever resting upon them and connected to such diaphragm, the lever and diaphragm being moved by the friction between the point being greatest, or the thickness of the ink being greater where there is a large quantity of ink than where there is a small quantity. Thus the original sound-vibrations are reproduced upon the second diaphragm.

I claim as my invention—

1. The method herein specified of reproducing the human voice or other sounds by causing the sound-vibrations to be recorded, substantially as specified, and obtaining motion from that record, substantially as set forth, for the reproduction of the sound-vibrations.

2. The combination, with a diaphragm exposed to sound-vibrations, of a moving surface of yielding material—such as metallic foil—upon which marks are made corresponding to the sound-vibrations, and of a character adapted to use in the reproduction of the sound, substantially as set forth.

3. The combination, with a surface having marks thereon corresponding to sound-vibrations, of a point receiving motion from such marks, and a diaphragm connected to said point, and responding to the motion of the point, substantially as set forth.

4. In an instrument for making a record of sound-vibrations, the combination, with the diaphragm and point, of a cylinder having a helical groove and means for revolving the cylinder and communicating an end movement corresponding to the inclination of the helical groove, substantially as set forth.

Signed by me this 15th day of December, A. D. 1877.

THOS. A. EDISON.

Witnesses:
GEO. T. PINCKNEY,
CHAS. H. SMITH.

M. GALLY.

Mechanical Musical-Instrument.

No. 210,249. Patented Nov. 26, 1878.

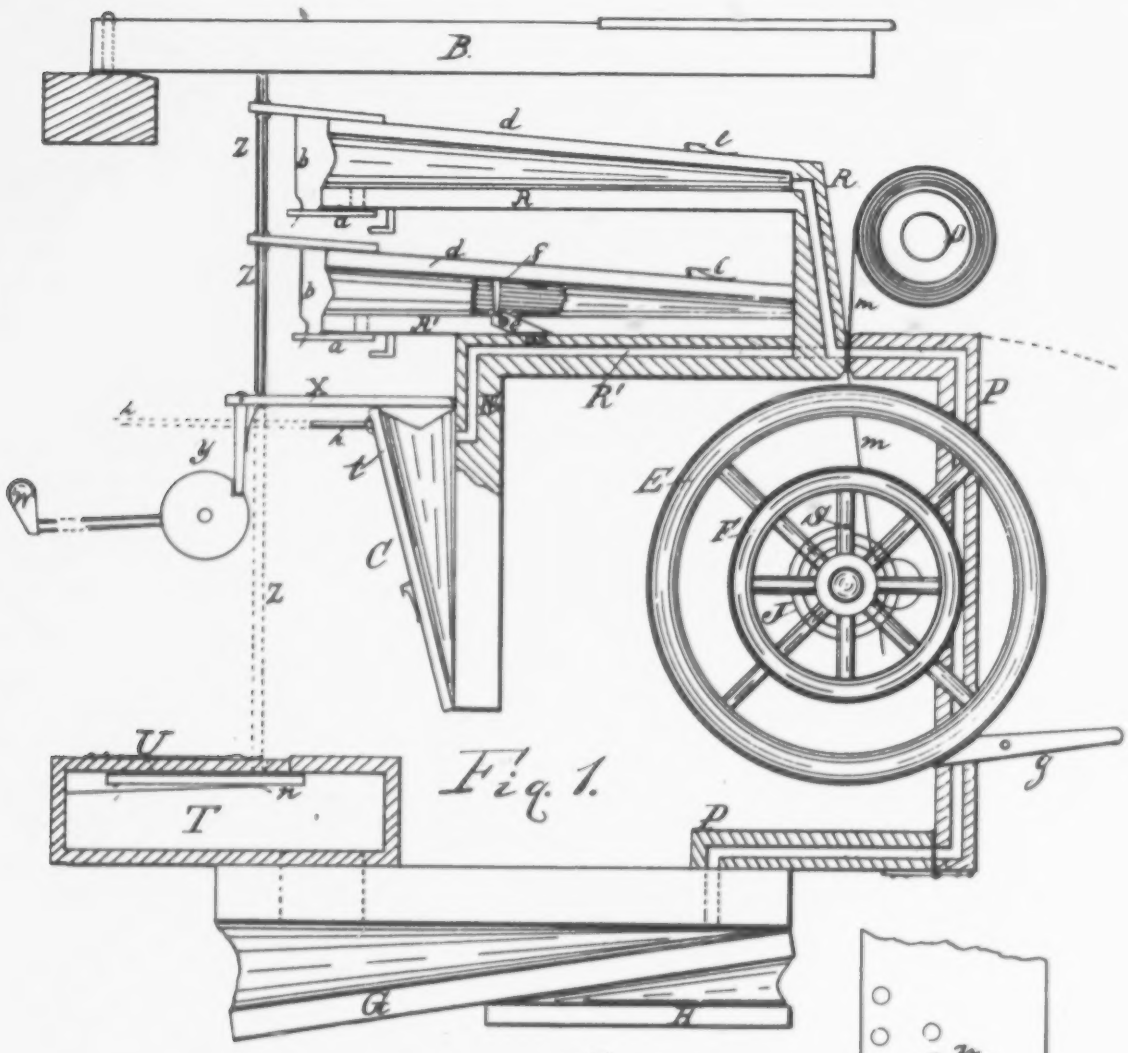

Fig. 1.

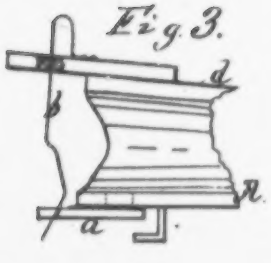

Fig. 3.

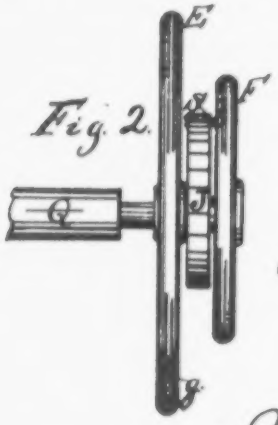

Fig. 2.

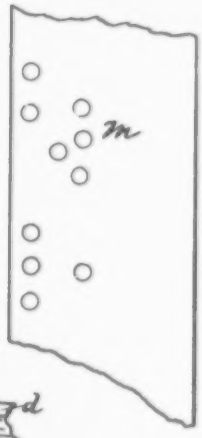

Fig. 4.

Witnesses:

Inventor

UNITED STATES PATENT OFFICE.

MERRITT GALLY, OF NEW YORK, N. Y.

IMPROVEMENT IN MECHANICAL MUSICAL INSTRUMENTS.

Specification forming part of Letters Patent No. **210,249**, dated November 26, 1878; application filed June 14, 1878.

To all whom it may concern:

Be it known that I, MERRITT GALLY, of New York city, county and State of New York, have invented certain new and useful Improvements in Musical Instruments; and I do hereby declare that the following is a full and exact description thereof, reference being had to the accompanying drawings, and to the letters of reference marked thereon.

In Figure 1, A A′ C represent the pneumatic keys, substantially the same as those described in my patent of May 7, 1878, with certain modifications and devices for adapting them to different parts of the instrument. When a very rapid movement of the key is desirable I place the valve *a* to close an opening to the chamber of the key, so that the opening of the valve may accelerate the return movement of the key after its stroke is complete. In the position of rest of the key the valve *a* is held closed by the spring-tripper *b*, the end of which is bent at an angle, which rests against a bevel on the valve where the two are in contact. When the follower *d* is depressed the tripper moves with it until the next bend in the tripper is under the end of the valve. As the follower comes back on its return movement the next bend of the spring trips the valve and instantly opens the key-chamber. The valve may be held open a short or long movement, as desirable, by a proper shaping of the wire *b*, as may be seen in Fig. 3, the incline of the wire being longer or shorter for that purpose.

Fig. 4 shows a modification of the tripping-valve, the valve *a* being closed while at rest in the normal position of the key. The valve is sufficiently large to be held with some force by the exhaust when the air is being drawn from the chamber of the key. As the follower *d* is depressed the valve comes in contact with a spring-tripper, *b′*; but the spring being very light and sensitive the valve is still held by the exhaust until such exhaust is cut off by an unperforated part of the music-sheet. As the exhaust is cut off the recoil of the key, in connection with the force of the spring, opens the valve, which is held open during the return of the follower *d* until it reaches again

When the musical tone is produced by a stroke, as on a bell or the string of a pianoforte, it is desirable to give at different times strokes of more or less power to correspond with the "expression" of the music to be rendered. For this purpose I use two or more sub-pneumatic keys, A A′, any number of which may be made to act in combination on the sounding device. The line of perforations in the music-sheet corresponding with the key A opens to the air-duct R. The line of perforations representing the expression opens to the duct R′. The duct R′ does not open directly into the chamber of key A′, but connection is made between them by a valve, *e*.

In order that a single line of perforations may operate any one of the entire number of a complete bank of sub-pneumatic keys, the line of perforations is made to open through the duct R′, leading to all the sub-keys in the bank, or any desirable number of them.

Instead of opening directly into the duct R′, intervening mechanical action, pneumatically operated, may be used, if desirable, between the perforations of the sheet and the duct R′.

It will be seen, however, that the operation thus far will not yet cause any of the sub-keys to act, as their valves are all closed. When, however, any one of the primary keys is moved to produce a note, and the exhaust is operating on the duct R′, the beginning of the movement of the primary key A moves with it the follower of its sub-key A′, and opens valve *e*. by means of the tripper *f*, which holds the valve open until the stroke is complete, when the tripper slips from its notch in the valve, and, the orifice being instantly closed, the sub-key is ready to return to place. The primary key, during the entire time of its exhaust, holds on to the note to give it its desired length. The sub-key gives its additional power to the stroke when required, the primary keys acting alone producing the softer touch.

I also construct, when desired, the tripping-valve of the primary key in the same manner as the tripping-valve of the sub-pneumatic, and place it on the upper surface of the follower *d*, the tripper projecting from above.

With another line of expression perforati-

M. GALLY.

Mechanical Musical-Instrument.

No. 210,249. Patented Nov. 26, 1878.

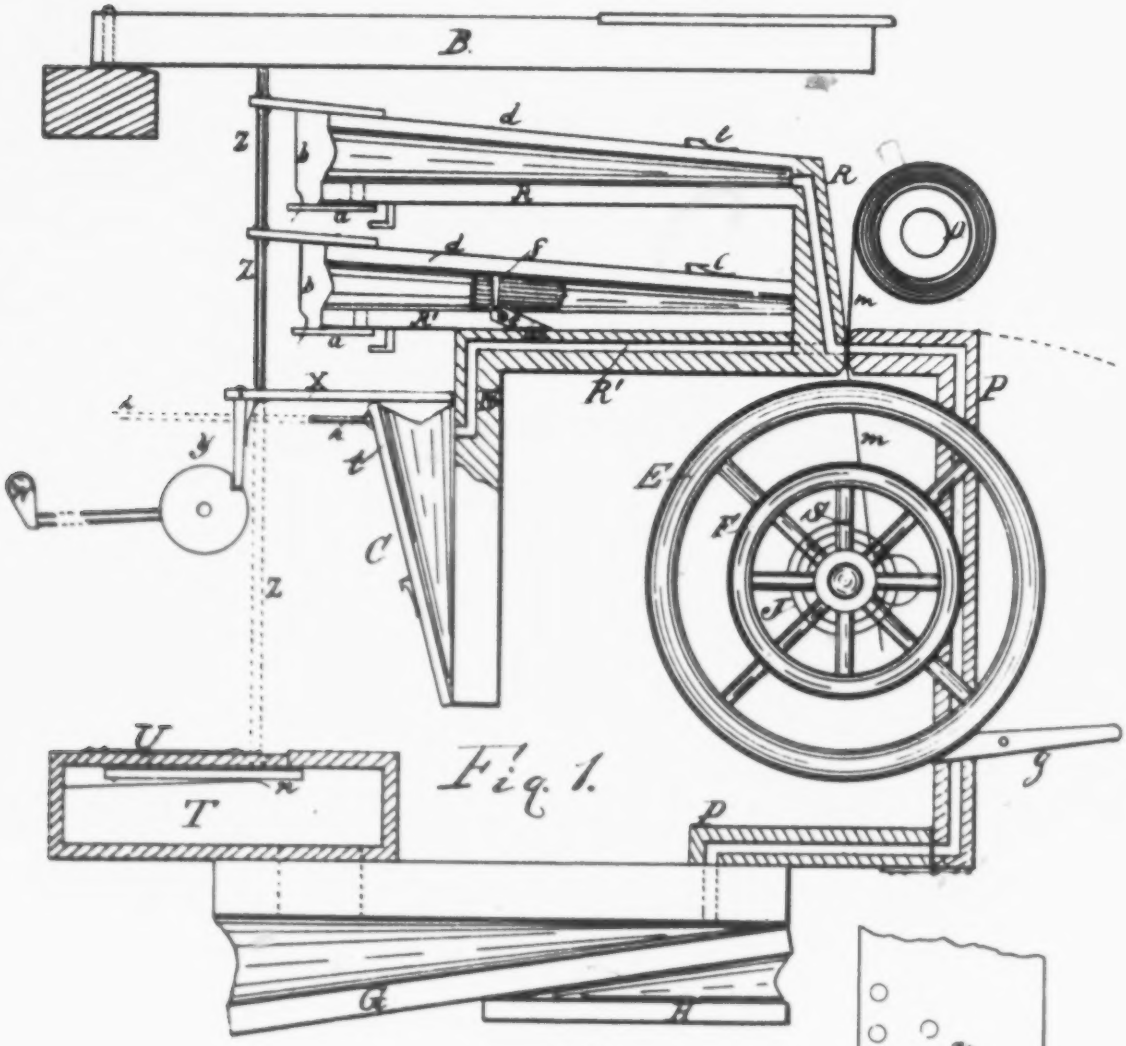

Fig. 1.

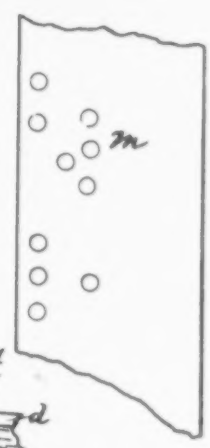

Fig. 3.

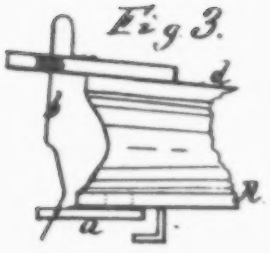

Fig. 2.

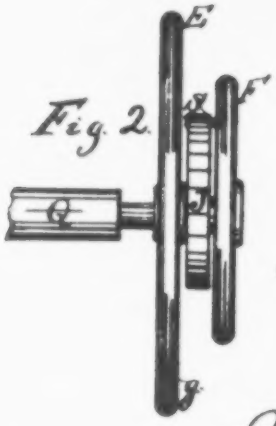

Fig. 4.

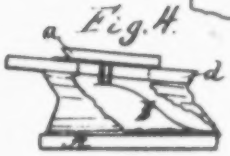

Witnesses:
Alice E. Thomson
Chas. Kelly

Inventor:
Merritt Gally,
By John Thomson,
Atty.

UNITED STATES PATENT OFFICE.

MERRITT GALLY, OF NEW YORK, N. Y.

IMPROVEMENT IN MECHANICAL MUSICAL INSTRUMENTS.

Specification forming part of Letters Patent No. **210,249**, dated November 26, 1878; application filed June 14, 1878.

To all whom it may concern:

Be it known that I, MERRITT GALLY, of New York city, county and State of New York, have invented certain new and useful Improvements in Musical Instruments; and I do hereby declare that the following is a full and exact description thereof, reference being had to the accompanying drawings, and to the letters of reference marked thereon.

In Figure 1, A A′ C represent the pneumatic keys, substantially the same as those described in my patent of May 7, 1878, with certain modifications and devices for adapting them to different parts of the instrument. When a very rapid movement of the key is desirable I place the valve *a* to close an opening to the chamber of the key, so that the opening of the valve may accelerate the return movement of the key after its stroke is complete. In the position of rest of the key the valve *a* is held closed by the spring-tripper *b*, the end of which is bent at an angle, which rests against a bevel on the valve where the two are in contact. When the follower *d* is depressed the tripper moves with it until the next bend in the tripper is under the end of the valve. As the follower comes back on its return movement the next bend of the spring trips the valve and instantly opens the key-chamber. The valve may be held open a short or long movement, as desirable, by a proper shaping of the wire *b*, as may be seen in Fig. 3, the incline of the wire being longer or shorter for that purpose.

Fig. 4 shows a modification of the tripping-valve, the valve *a* being closed while at rest in the normal position of the key. The valve is sufficiently large to be held with some force by the exhaust when the air is being drawn from the chamber of the key. As the follower *d* is depressed the valve comes in contact with a spring-tripper, *b′*; but the spring being very light and sensitive the valve is still held by the exhaust until such exhaust is cut off by an unperforated part of the music-sheet. As the exhaust is cut off the recoil of the key, in connection with the force of the spring, opens the valve, which is held open during the return of the follower *d* until it reaches again its normal position.

When the musical tone is produced by a stroke, as on a bell or the string of a pianoforte, it is desirable to give at different times strokes of more or less power to correspond with the "expression" of the music to be rendered. For this purpose I use two or more sub-pneumatic keys, A A′, any number of which may be made to act in combination on the sounding device. The line of perforations in the music-sheet corresponding with the key A opens to the air-duct R. The line of perforations representing the expression opens to the duct R′. The duct R′ does not open directly into the chamber of key A′, but connection is made between them by a valve, *e*.

In order that a single line of perforations may operate any one of the entire number of a complete bank of sub-pneumatic keys, the line of perforations is made to open through the duct R′, leading to all the sub-keys in the bank, or any desirable number of them.

Instead of opening directly into the duct R′, intervening mechanical action, pneumatically operated, may be used, if desirable, between the perforations of the sheet and the duct R′.

It will be seen, however, that the operation thus far will not yet cause any of the sub-keys to act, as their valves are all closed. When, however, any one of the primary keys is moved to produce a note, and the exhaust is operating on the duct R′, the beginning of the movement of the primary key A moves with it the follower of its sub-key A′, and opens valve *e* by means of the tripper *f*, which holds the valve open until the stroke is complete, when the tripper slips from its notch in the valve, and, the orifice being instantly closed, the sub-key is ready to return to place. The primary key, during the entire time of its exhaust, holds on to the note to give it its desired length. The sub-key gives its additional power to the stroke when required, the primary keys acting alone producing the softer touch.

I also construct, when desired, the tripping-valve of the primary key in the same manner as the tripping-valve of the sub-pneumatic, and place it on the upper surface of the follower *d*, the tripper projecting from above.

With another line of expression-perforations, or connected with the same, as duct R′, I open

a duct, R^2, which operates pneumatics C to change the leverage of the devices operating to produce the stroke. As the follower *t* of pneumatics C is drawn to the right the leverage of bar X is changed in respect to the striking-pin Z, and the force of the stroke modified. The dotted line A represents the connection for moving the ordinary soft pedal attachment of the piano-forte, (shown as operated by the pneumatic,) to still further affect the expression of the music.

The key movement is shown in Fig. 1 as operating either on a reed of a wind instrument or piano-action. It may also be applied to any other instrument, or combination of instruments, that may be operated by mechanical movements.

The finger-keys are shown to indicate that the instrument may be played either manually or mechanically, at will. The finger-keys and the pneumatic keys are shown in the drawings as arranged to operate on the same push-pins which connect with the sounding devices.

The exhaust-bellows H and receiving-chamber G are represented diminished in size. The motor for music-sheet *m* is not shown, as any of the ordinary methods will be understood as answering the purpose.

In order that the operator may be able, when desirable, to hold on the time of a note without having to suddenly check the motor, be it whatever it may, I make the smaller fly-wheel F, which is the crank or driving wheel, loose on the motor-shaft Q, and attach to the wheel and shaft a coiled spring, J. This spring is strong enough in its tension to drive the motor-shaft without much winding. The fly-wheel E is made fast to the motor-shaft, and gives it a steady motion by its momentum. When, however, the brake *g* is applied to the wheel E the time of the shaft is retarded, while the spring J is wound by the crank-wheel until the main or driving power is gradually changed to the corresponding time, or the brake set free.

Fig. 2 shows a detached view of the motor-wheels and spring. The wheel E is made fast to shaft Q; the wheel F loose on the shaft, but connected with it by spring J.

The several devices, essentially as shown in the drawings, may be used not only as forming a part of the construction of a musical instrument, but may be used as a movable attachment for performing upon an ordinary piano, organ, or other keyed instrument. In such case the stroke from the pin Z, or other suitable projection from the pneumatic key, may be applied directly or indirectly upon the surface of the ordinary finger-keys of the instrument, or may be applied more directly to the sounding devices independent of the finger-keys.

What I claim is—

1. The combination, with a pneumatic key-action in a mechanical musical instrument, of the perforated music-sheet and a tripping-valve, substantially as and for the purpose specified.

2. The combination, with the primary keys of a pneumatic key-action, of sub-pneumatic keys, substantially as and for the purpose specified.

3. The combination, with the sub-pneumatic key A′, of air-duct R^1 and a tripping-valve operative during the movement of its primary key.

4. A movable fulcrum mechanically operated in the key-action of a musical instrument, for the purpose of increasing or diminishing the power of the stroke.

5. The combination, with pneumatic keys operated by a music-sheet, of finger-keys, the pneumatic keys and the finger-keys both arranged to act upon the push-pins Z, substantially as specified.

6. In a mechanical musical instrument, the motor-shaft Q, with a brake for retarding the same, and a yielding connection between the shaft and its driving device, substantially as and for the purpose specified.

MERRITT GALLY.

Witnesses:
JOHN THOMSON,
CHAS. KELLY.

740

2 Sheets—Sheet 1.

T. A. EDISON.
Phonograph.

No. 227,679. Patented May 18, 1880.

Fig. 1.

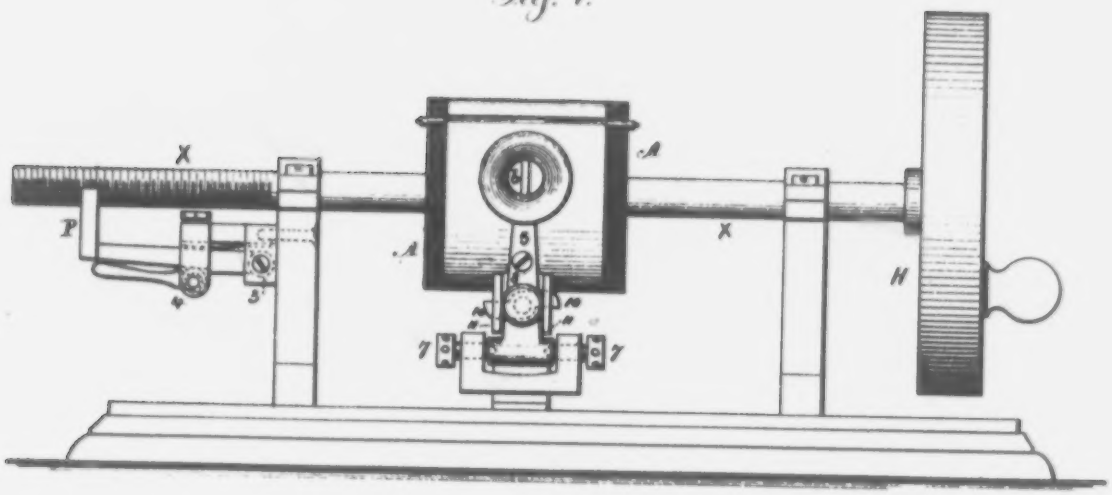

Fig. 2.

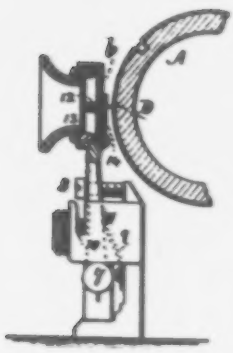

Fig. 5.

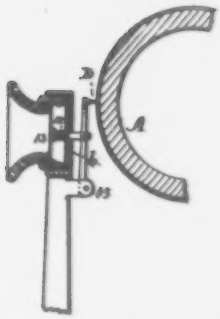

Fig. 6

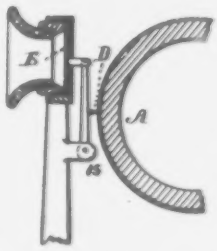

Witnesses.
Harold Sprell
Chas. Sumner

Inventor.
Thomas A. Edison
per Percival W. Sprell

T. A. EDISON.

Phonograph.

No. 227,679. Patented May 18, 1880.

Fig. 1.

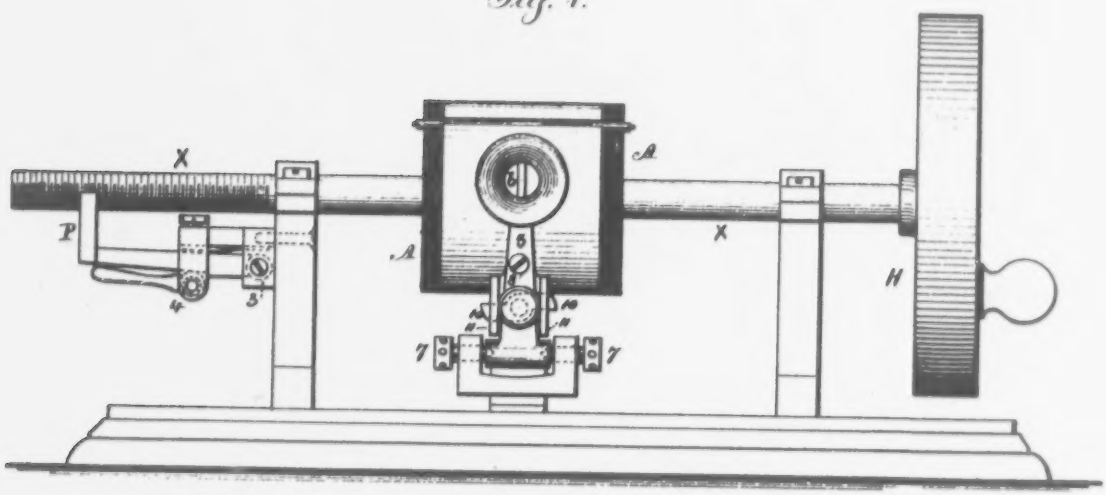

Fig. 2.

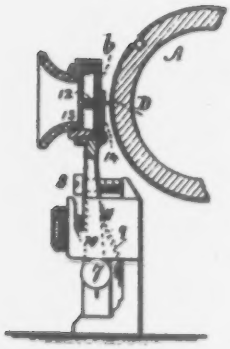

Fig. 5.

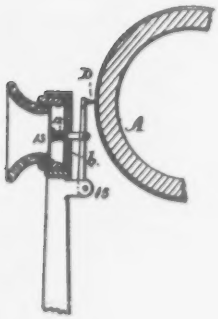

Fig. 6

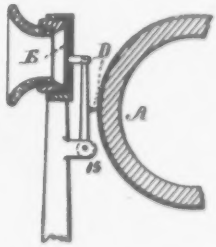

Witnesses.

Harold Serrell

Chas. H. Smith

Inventor.

Thomas A. Edison

per Samuel W. Serrell

Atty

742

2 Sheets—Sheet 2

T. A. EDISON.
Phonograph.

No. 227,679. Patented May 18, 1880.

Fig. 4

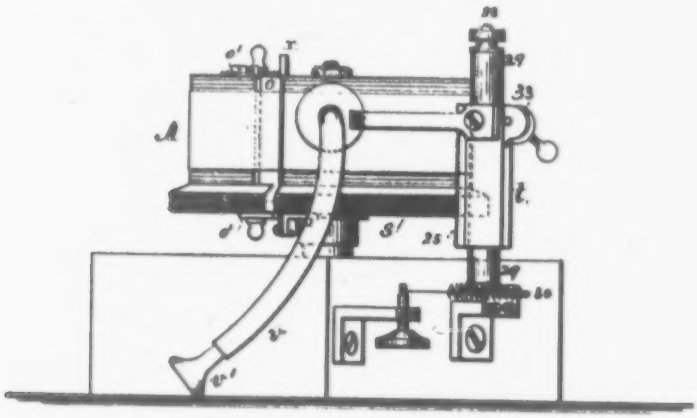

Fig. 7.

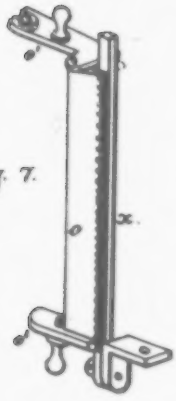

Fig. 3.

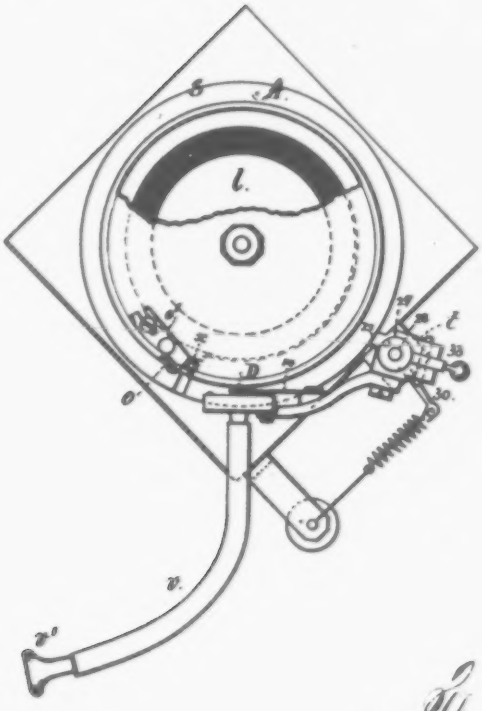

Witnesses.
Harold Serrill

Inventor.
Thomas A. Edison

UNITED STATES PATENT OFFICE.

THOMAS A. EDISON, OF MENLO PARK, NEW JERSEY.

PHONOGRAPH.

SPECIFICATION forming part of Letters Patent No. 227,679, dated May 18, 1880.

Application filed March 29, 1878.

To all whom it may concern:

Be it known that I, THOMAS ALVA EDISON, of Menlo Park, in the State of New Jersey, have invented an Improvement in Phonographs, (Case No. 174,) of which the following is a specification.

In Letters Patent No. 200,521, granted to me, a cylinder with a helical-grooved surface is revolved with its screw-shaft and moved along endwise. Upon this cylinder there is a sheet of foil or similar material, and the same is indented by the action of a point moved by a diaphragm, and this foil forms a phonogram that can be used to reproduce the original sounds when moved in contact with a point and diaphragm. In the said patent one of the points is shown as connected directly to the diaphragm, and the other point is upon a spring.

My present invention relates to improvements upon the phonograph patented as aforesaid, and the features of such improvement are hereinafter specially pointed out.

In the drawings, Figure 1 is an elevation of the phonograph. Fig. 2 is a section of the diaphragm. Fig. 3 is an end view of the cylinder containing the foil. Fig. 4 is a side view of the diaphragm and the device for moving the same.

The cylinder A has a grooved surface, as in aforesaid patent, and it receives the tin-foil or other material that is to be indented by the action of the diaphragm *b* and point to produce the record of the sound, which I term the "phonogram," and the diaphragm E and point D are adapted to form a phonet and reproduce the sound; but it is to be understood that the same point and diaphragm may be employed to record and to reproduce the sound.

In my present invention, as in my former patent, the motion of the recording-surface may be derived from clock-work, hand, or other power.

In order to insure great uniformity of speed and prevent irregularity in the movement by inaccuracies of work, dust, lack of oil, or any other source of local friction or resistance, I make use of an abnormally heavy fly-wheel, H, upon the shaft of the phonograph, so as to prevent any trembling movement and to resist any tendency to increase or lessen the speed, for upon uniformity of speed of the phonet with the phonograph depends the accuracy of reproduction, especially in musical sounds, that depend for their tone upon the number of vibrations per second.

The nut P is upon a lever pivoted at 3 and kept in contact by a cam, 4. When this lever and nut P are lowered the shaft X and cylinder A can be slipped endwise.

The arm 5, carrying the diaphragm *b*, should be pivoted at 7 7 by pointed screws, so as to adjust the position of the recording-point of the diaphragm *b* relatively to the grooves of the cylinder. The screw 8 determines the position to which the diaphragm and recording-point may approach to the cylinder. The spring 9 serves to move the arm 5 away from the cylinder, and the double-ended locking-piece 10, entering slots in the frame 11, holds the arm in place when in use.

One of the peculiarities of the present invention over the aforesaid patent is a spring, 12, of india-rubber or other suitable material, placed between the cross-bar or bridge 13 and the diaphragm, that serves as a damper to prevent false vibrations of the diaphragm and cause it to respond only to the actual movement given by the phonogram through the point D. It is also usually preferable to employ a spring, 14, between the point and the diaphragm. This is useful, in both the phonograph and the phonet, to prevent false sounds. This spring and diaphragm I have used in connection with telephones. I do not, therefore, herein lay claim to the same, broadly. I have combined the same with the recording or phonet point and the phonogram.

Another feature of invention relates to a lever between the diaphragm and the phonogram, whereby the relative movements of the parts may be varied. This lever *e* has a fulcrum at 15. If the connection to the diaphragm is between the point D and fulcrum 15, as in Fig. 5, then the motion of the point will be greater than the diaphragm, and when used in the phonograph will amplify the indentations

T. A. EDISON.
Phonograph.

No. 227,679. Patented May 18, 1880.

Fig. 4.

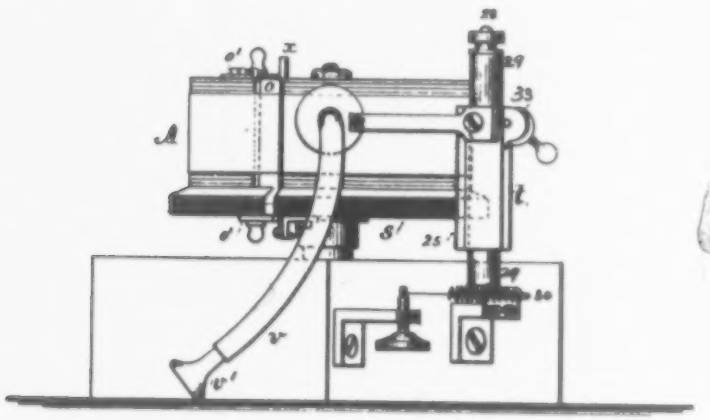

Fig. 7.

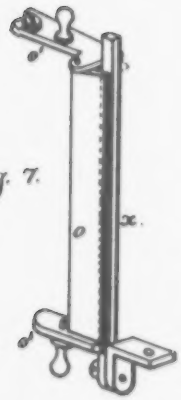

Fig. 3.

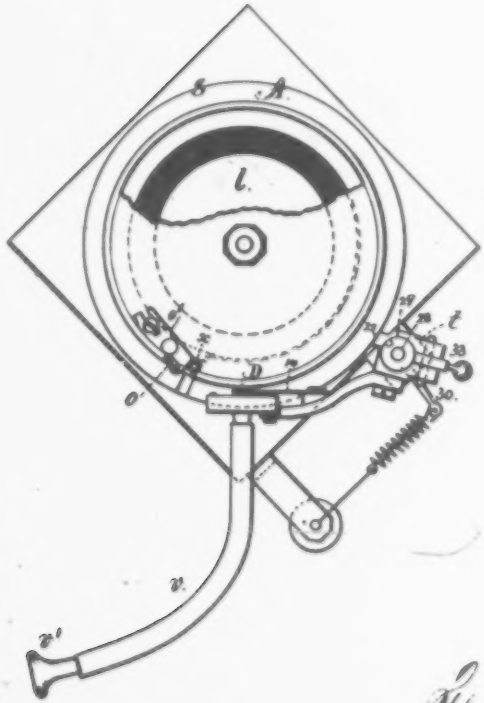

Witnesses.
Harold Serrell
Chas. F. Smith

Inventor.
Thomas A. Edison
per Lemuel W. Serrell
Atty

UNITED STATES PATENT OFFICE.

THOMAS A. EDISON, OF MENLO PARK, NEW JERSEY.

PHONOGRAPH.

SPECIFICATION forming part of Letters Patent No. 227,679, dated May 18, 1880.

Application filed March 29, 1879.

To all whom it may concern:

Be it known that I, THOMAS ALVA EDISON, of Menlo Park, in the State of New Jersey, have invented an Improvement in Phonographs, (Case No. 174,) of which the following is a specification.

In Letters Patent No. 200,521, granted to me, a cylinder with a helical-grooved surface is revolved with its screw-shaft and moved along endwise. Upon this cylinder there is a sheet of foil or similar material, and the same is indented by the action of a point moved by a diaphragm, and this foil forms a phonogram that can be used to reproduce the original sounds when moved in contact with a point and diaphragm. In the said patent one of the points is shown as connected directly to the diaphragm, and the other point is upon a spring.

My present invention relates to improvements upon the phonograph patented as aforesaid, and the features of such improvement are hereinafter specially pointed out.

In the drawings, Figure 1 is an elevation of the phonograph. Fig. 2 is a section of the diaphragm. Fig. 3 is an end view of the cylinder containing the foil. Fig. 4 is a side view of the diaphragm and the device for moving the same.

The cylinder A has a grooved surface, as in aforesaid patent, and it receives the tin-foil or other material that is to be indented by the action of the diaphragm *b* and point to produce the record of the sound, which I term the "phonogram," and the diaphragm E and point D are adapted to form a phonet and reproduce the sound; but it is to be understood that the same point and diaphragm may be employed to record and to reproduce the sound.

In my present invention, as in my former patent, the motion of the recording-surface may be derived from clock-work, hand, or other power.

In order to insure great uniformity of speed and prevent irregularity in the movement by inaccuracies of work, dust, lack of oil, or any other source of local friction or resistance, I make use of an abnormally heavy fly-wheel, H, upon the shaft of the phonograph, so as to prevent any trembling movement and to resist any tendency to increase or lessen the speed, for upon uniformity of speed of the phonet with the phonograph depends the accuracy of reproduction, especially in musical sounds, that depend for their tone upon the number of vibrations per second.

The nut P is upon a lever pivoted at 3 and kept in contact by a cam, 4. When this lever and nut P are lowered the shaft X and cylinder A can be slipped endwise.

The arm 5, carrying the diaphragm *b*, should be pivoted at 7 7 by pointed screws, so as to adjust the position of the recording-point of the diaphragm *b* relatively to the grooves of the cylinder. The screw 8 determines the position to which the diaphragm and recording-point may approach to the cylinder. The spring 9 serves to move the arm 5 away from the cylinder, and the double-ended locking-piece 10, entering slots in the frame 11, holds the arm in place when in use.

One of the peculiarities of the present invention over the aforesaid patent is a spring, 12, of india-rubber or other suitable material, placed between the cross-bar or bridge 13 and the diaphragm, that serves as a damper to prevent false vibrations of the diaphragm and cause it to respond only to the actual movement given by the phonogram through the point D. It is also usually preferable to employ a spring, 14, between the point and the diaphragm. This is useful, in both the phonograph and the phonet, to prevent false sounds. This spring and diaphragm I have used in connection with telephones. I do not, therefore, herein lay claim to the same, broadly. I have combined the same with the recording or phonet point and the phonogram.

Another feature of invention relates to a lever between the diaphragm and the phonogram, whereby the relative movements of the parts may be varied. This lever *e* has a fulcrum at 15. If the connection to the diaphragm is between the point D and fulcrum 15, as in Fig. 5, then the motion of the point will be greater than the diaphragm, and when used in the phonograph will amplify the indentations

in the foil. If used in the phonet, the movement of the diaphragm would be lessened. I therefore prefer, in that instrument, to change the places of the point and diaphragm connection, as shown in Fig. 6, so as to amplify the movement of the diaphragm and increase the sound.

Another feature of my present invention relates to the foil-holder, which I place on a reel within the cylinder A, and draw the same out through a slot, as required from time to time, thus preserving the foil from injury and rendering it unnecessary to handle the same.

The reel *l* within the cylinder A is adapted to receive the foil in a roll upon it. One head of the cylinder is removable, so as to allow of the insertion or withdrawal of the reel. There is a slot in the cylinder, through which the foil is brought out, and there is a bar, *o*, forming part of the periphery of the cylinder, that is connected at its ends to the slides *o'*, (see Fig. 7,) one at each end of the cylinder, and there is a lever-bar, *x*, behind this slide-bar *o*. When the slide *o'* is drawn back from over the lever *x*, such lever can be swung out of the slot in the cylinder A, and the foil can be drawn out of the slot and wrapped around the cylinder, and then the end is placed behind the bar *x*, and carried by it into the slot of the cylinder, and then the slide *o'* is moved so that its edge passes over the lever *x*, and in so doing the foil is tightened around the cylinder and the lever *x* held in place. The surface of this cylinder is made with a helical groove, and the rim *s* of the cylinder is made with a similar screw or groove, and the sliding sleeve *t*, that carries the diaphragm-arm, has a screw-surface at 25, that comes into contact with the screw *s*.

With this character of instrument it is preferable to have the cylinder A upon a vertical shaft, and the sleeve *t* and diaphragm will be moved vertically. For this purpose the fixed stud 28 is vertical, and upon it is a tube, 29, of a size to receive the sleeve *t*, and having a groove and key, by which the sleeve *t* is allowed to slide endwise of the tube 29; but the two can be turned together on the stud or shaft 28. An arm, 30, on the tube 29, and a spring, serve to turn the tube, the sleeve, and the diaphragm and arm with sufficient force to bring the point D to bear upon the foil with the required force.

It is preferable to employ with the diaphragm a tube, *r*, and mouth-piece *r'*, such tube being flexible.

The speaking into and recording of the sounds in the phonograph will be proceeded with as usual, and the reproduction of the sounds will be as before; but in case the operator wants to suspend the recording in the phonograph or the speaking in the phonet he simply has to draw upon the flexible tube, which swings the parts so as to disconnect the screw-rack from the flange *s* of the cylinder. This at the same time moves away the recording or the phonet point. The cylinder A can continue to revolve, and when the operator is ready he releases the pull upon the flexible tube, and the parts commence to act again at the exact place where the operation was suspended, because the screw-threads will only drop together when the proper part of the thread *s* comes to the corresponding part on the rack 25.

I employ the cam 33 and its lever upon the sleeve *t* to act upon the tube 29 and prevent the sleeve falling when the screw-threads are disconnected. This cam-lever 33 is self-acting, and it has to be raised when the sleeve *t* is to be lowered, so as to recommence at one end of the cylinder A.

By simply turning the sleeve and moving the diaphragm and the screw-surface back, the sleeve and diaphragm can be slipped endwise to any desired place upon the cylinder A to receive or deliver sounds.

I am aware that fly-wheels are employed in numerous ways for equalizing the speed of machinery. I do not claim the same, broadly. In experimenting with my phonograph I discovered that the reproduction of the sound was imperfect if the slightest variation occurred in the speed; hence the combination with the cylinder of a very heavy fly-wheel in proportion to the cylinder rendered perfect and reliable the action of the instrument in receiving and reproducing the sound by equalizing the speed.

I claim as my invention—

1. The combination, with the phonograph cylinder, shaft, and screw-surface, of a swinging nut or screw-surface, to connect or disconnect the parts that keep the recording or phonet point in position relative to the groove of the cylinder, substantially as set forth.

2. In combination with foil or a sound-recording surface, a point, a diaphragm, and a spring or damper acting to press the diaphragm toward the point, substantially as set forth.

3. In combination with a foil or sound-recording surface, a point, a diaphragm, and a spring between the point and the diaphragm, substantially as set forth.

4. The combination, in a phonograph or phonet, of a diaphragm, a point, and a lever intervening between the diaphragm and the point, substantially as set forth.

5. The combination, with the spirally-grooved cylinder in a phonograph, of a reel within the cylinder carrying the foil or similar recording material, a slot in the cylinder, through which the foil is led out, and means for clamping the foil, substantially as set forth.

6. The combination, with the cylinder A, of the sliding bar *o* and lever *x*, to clamp the foil and stretch the same, substantially as set forth.

7. The swinging sleeve *t*, having an arm that carries the diaphragm, in combination with the cylinder A, and rim *s*, having a screw-thread surface, substantially as set forth.

8. The tube 29 upon the fixed stud 28, in combination with the sliding sleeve *t*, the diaphragm, and the cylinder A. substantially as described and shown.

Signed by me this 19th day of March, 1879.

THOMAS A. EDISON.

Witnesses:

S. L. GRIFFIN,

WM. CARMAN.

748

(No Model.)

E. T. ROBB & A. W. SCHLEICHER.

DRIVING GEAR.

No. 299,013. Patented May 20, 1884.

FIG. 1.

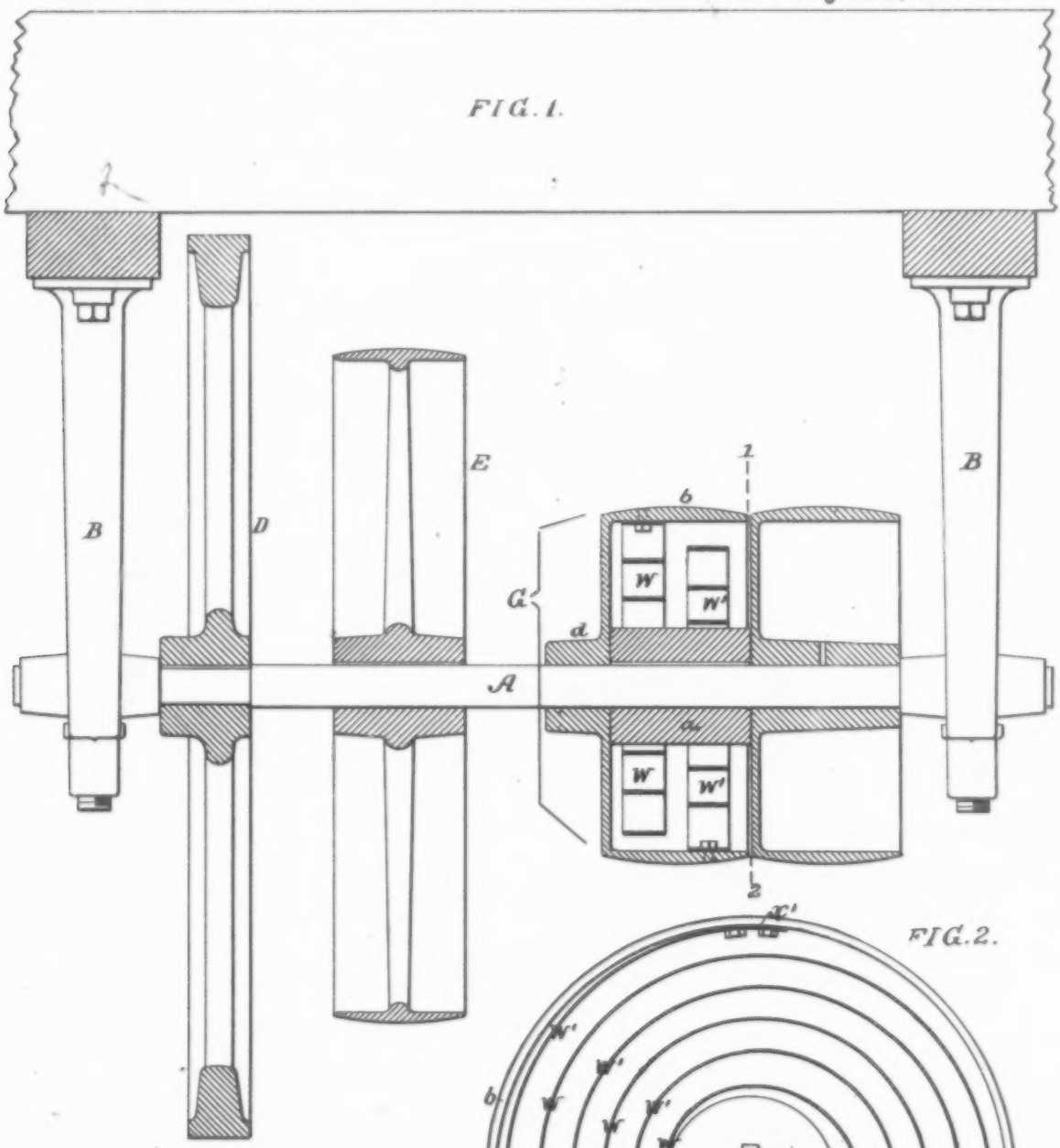

FIG. 2.

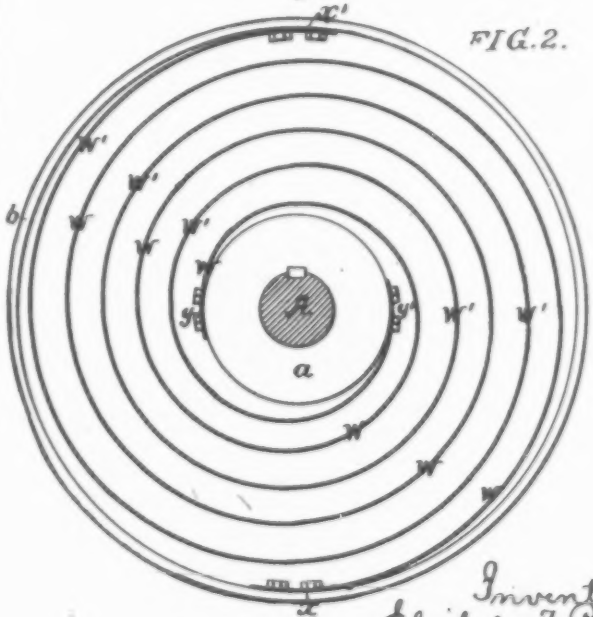

FIG. 3.

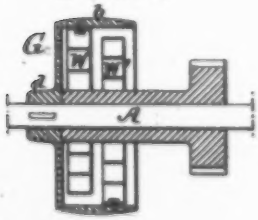

Witnesses:
John E. Parker

Inventors
Eliakim T. Robb

UNITED STATES PATENT OFFICE.

ELIAKIM T. ROBB, OF CHESTER, AND ADOLPH W. SCHLEICHER, OF PHILADELPHIA, PENNSYLVANIA.

DRIVING-GEAR.

SPECIFICATION forming part of Letters Patent No. 299,013, dated May 20, 1884.

Application filed February 16, 1884. (No model.)

To all whom it may concern:

Be it known that we, ELIAKIM T. ROBB, a resident of Chester, Pennsylvania, and ADOLPH W. SCHLEICHER, a resident of Philadelphia, Pennsylvania, both citizens of the United States, have invented certain Improvements in Driving-Gear, of which the following is a specification.

Our invention consists, mainly, of the combination of a shaft, a pulley or wheel, and a hub, one being loose and the other fast on the said shaft, with a helical spring or springs interposed between and secured to the pulley and hub, substantially as described hereinafter, the object of our invention being to neutralize by the said springs the effect of any irregularities which may occur in the running of the shaft.

In the accompanying drawings, Figure 1 illustrates, partly in section, our invention applied to a counter-shaft; Fig. 2, a transverse section on the line 1 2, and Fig. 3 a modification of our invention.

A pulley, G, having a rim, *b*, and hub *d*, is loose on the counter-shaft A, and this pulley is connected by a helical spring or springs to a hub, *a*, which is keyed or otherwise secured to the said shaft, and which may be a simple enlargement of the same, the said spring or springs being contained within the pulley, so as to afford a direct elastic connection between the latter and the hub. There are in the present instance two precisely similar helical springs, W W', secured at their outer ends to the rim of the pulley at points *x x'*, diametrically opposite each other, and at their inner ends to the hub *a* at points *y y'*, also diametrically opposite to each other, as shown in Fig. 2.

It may be remarked here that while one helical spring only may be used as a means of connecting the rim of the pulley to the hub *a*, in carrying out our invention, we much prefer two precisely similar springs applied in the manner described above, so that the pulley may be properly balanced.

More than two springs may be used; but whatever the number of springs may be, they should be so applied to the rim of the pulley and hub *a* as to attain this balancing effect.

In the present instance the shaft is adapted to bearings in hangers B B, and carries the loose pulley M, the pulley E, and fly-wheel D, G being in this case the driven pulley, and E the pulley which, through the medium of a belt, transmits power to any machine. The pulley G, however, may be the driver. It may, for instance, be applied to the crank-shaft of a steam-engine in connection with the main driving-belt.

The spring or springs interposed between and secured to the pulley and hub tend to so neutralize the effect of any want of uniformity in the rotation of the shaft that the irregularities are not transferred to the pulley. In other words, the springs by their tension and recoil under the influence of irregularities in the movement of the shaft absorb or in a great measure absorb such irregularities. In effecting this purpose the fly-wheel is an important element, as will be readily understood by those who are familiar with the art to which our invention relates; but a pulley or wheel on the shaft may be of such diameter and weight as to be the equivalent of a fly-wheel.

It will be also understood that G may be a cog-wheel, either a driving or driven wheel.

In the modification, shown in Fig. 3 the hub *a* is loose on the shaft, and the pulley or wheel G fast thereon, a spring or springs being interposed between the hub and pulley in the manner described above.

We have shown the springs W W' side by side, the pulley G being wide enough to permit this arrangement; but in narrow pulleys it may be advisable to place all of the springs in the same plane, so that they will not occupy so much space laterally in the pulley.

We claim as our invention—

1. The combination of a driving or driven pulley or wheel, a shaft, and a fly-wheel and hub carried thereby with a helical spring or springs contained within the pulley, interposed between the rim of the latter and the hub, and connected to both rim and hub, all substan-

DRIVING GEAR.

No. 299,013. Patented May 20, 1884.

FIG. 1.

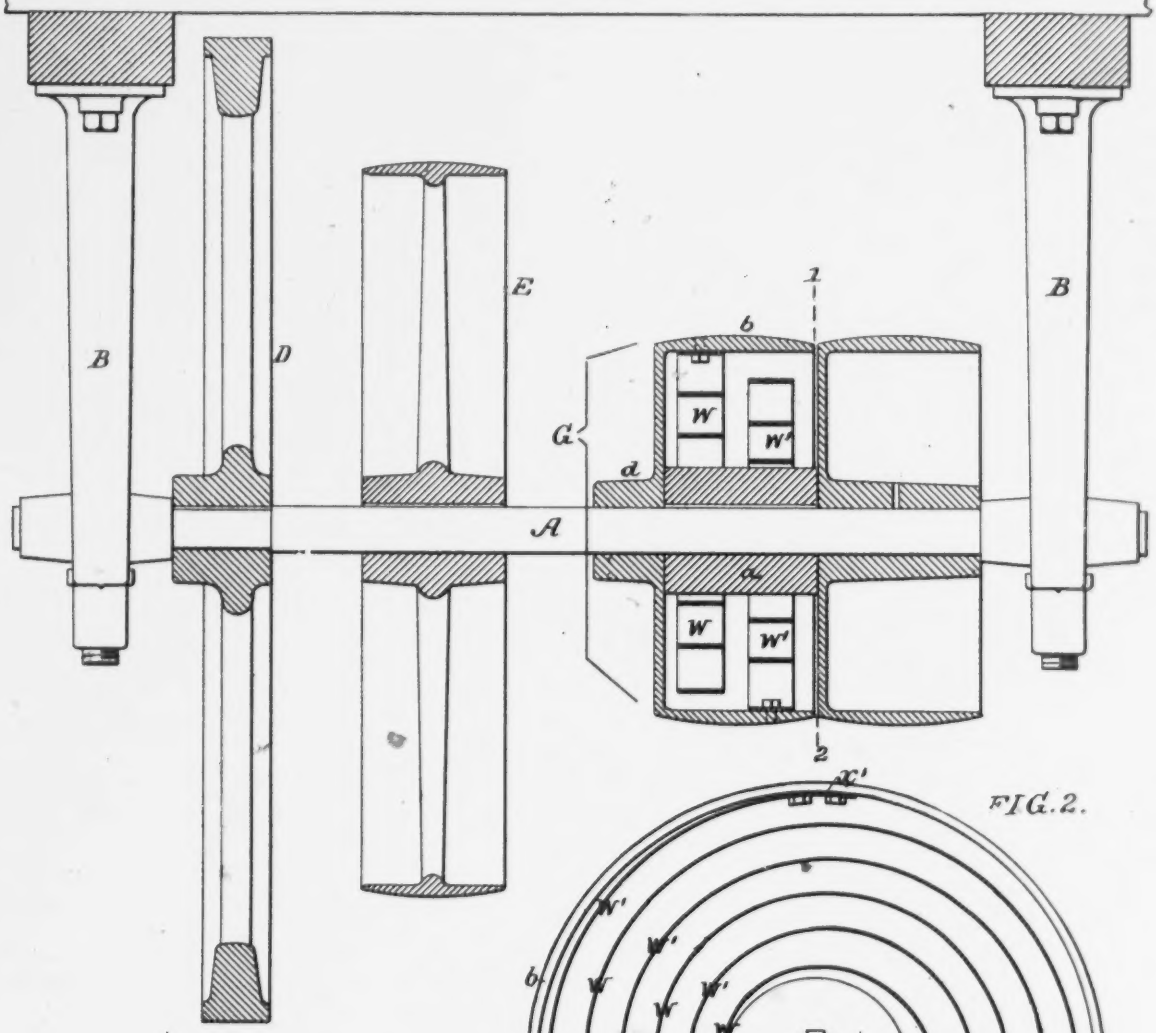

FIG. 2.

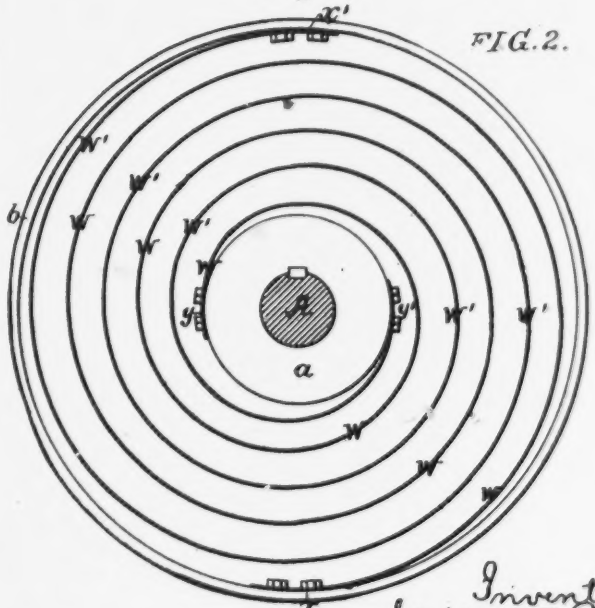

FIG. 3.

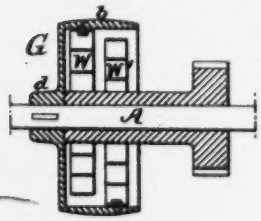

Witnesses:
John E. Parker
James F. Jobin

Inventors
Eliakim J. Robb
and
Adolph W. Schleicher
by their Attys
Howson & Sons

UNITED STATES PATENT OFFICE.

ELIAKIM T. ROBB, OF CHESTER, AND ADOLPH W. SCHLEICHER, OF PHILADELPHIA, PENNSYLVANIA.

DRIVING-GEAR.

SPECIFICATION forming part of Letters Patent No. 299,013, dated May 20, 1884.

Application filed February 16, 1884. (No model.)

To all whom it may concern:

Be it known that we, ELIAKIM T. ROBB, a resident of Chester, Pennsylvania, and ADOLPH W. SCHLEICHER, a resident of Philadelphia, Pennsylvania, both citizens of the United States, have invented certain Improvements in Driving-Gear, of which the following is a specification.

Our invention consists, mainly, of the combination of a shaft, a pulley or wheel, and a hub, one being loose and the other fast on the said shaft, with a helical spring or springs interposed between and secured to the pulley and hub, substantially as described hereinafter, the object of our invention being to neutralize by the said springs the effect of any irregularities which may occur in the running of the shaft.

In the accompanying drawings, Figure 1 illustrates, partly in section, our invention applied to a counter-shaft; Fig. 2, a transverse section on the line 1 2, and Fig. 3 a modification of our invention.

A pulley, G, having a rim, *b*, and hub *d*, is loose on the counter-shaft A, and this pulley is connected by a helical spring or springs to a hub, *a*, which is keyed or otherwise secured to the said shaft, and which may be a simple enlargement of the same, the said spring or springs being contained within the pulley, so as to afford a direct elastic connection between the latter and the hub. There are in the present instance two precisely similar helical springs, W W′, secured at their outer ends to the rim of the pulley at points *x x′*, diametrically opposite each other, and at their inner ends to the hub *a* at points *y y′*, also diametrically opposite to each other, as shown in Fig. 2.

It may be remarked here that while one helical spring only may be used as a means of connecting the rim of the pulley to the hub *a*, in carrying out our invention, we much prefer two precisely similar springs applied in the manner described above, so that the pulley may be properly balanced.

More than two springs may be used; but whatever the number of springs may be, regard should be had to such attachment of them to the rim of the pulley and hub *a* as to attain this balancing effect.

In the present instance the shaft is adapted to bearings in hangers B B, and carries the loose pulley M, the pulley E, and fly-wheel D, G being in this case the driven pulley, and E the pulley which, through the medium of a belt, transmits power to any machine. The pulley G, however, may be the driver. It may, for instance, be applied to the crank-shaft of a steam-engine in connection with the main driving-belt.

The spring or springs interposed between and secured to the pulley and hub tend to so neutralize the effect of any want of uniformity in the rotation of the shaft that the irregularities are not transferred to the pulley. In other words, the springs by their tension and recoil under the influence of irregularities in the movement of the shaft absorb or in a great measure absorb such irregularities. In effecting this purpose the fly-wheel is an important element, as will be readily understood by those who are familiar with the art to which our invention relates; but a pulley or wheel on the shaft may be of such diameter and weight as to be the equivalent of a fly-wheel.

It will be also understood that G may be a cog-wheel, either a driving or driven wheel.

In the modification, shown in Fig. 3 the hub *a* is loose on the shaft, and the pulley or wheel G fast thereon, a spring or springs being interposed between the hub and pulley in the manner described above.

We have shown the springs W W′ side by side, the pulley G being wide enough to permit this arrangement; but in narrow pulleys it may be advisable to place all of the springs in the same plane, so that they will not occupy so much space laterally in the pulley.

We claim as our invention—

1. The combination of a driving or driven pulley or wheel, a shaft, and a fly-wheel and hub carried thereby with a helical spring or springs contained within the pulley, interposed between the rim of the latter and the hub, and connected to both rim and hub, all substantially as set forth.

2. The combination of a driving or driven

pulley or wheel, its shaft, and fly-wheel and hub carried thereby with two or more helical springs contained within the said pulley, and secured to the rim of the latter and to the hub at such points that the said springs will balance each other, substantially as set forth.

In testimony whereof we have signed our names to this specification in the presence of two subscribing witnesses.

ELIAKIM T. ROBB.
ADOLPH W. SCHLEICHER.

Witnesses:
JOHN E. PARKER,
HARRY SMITH.

752 (No Model.) 3 Sheets—Sheet 1

A. G. & C. A. BELL & S. TAINTER.

TRANSMITTING AND RECORDING SOUNDS BY RADIANT ENERGY.

No. 341,213. Patented May 4, 1886.

Fig. 1.

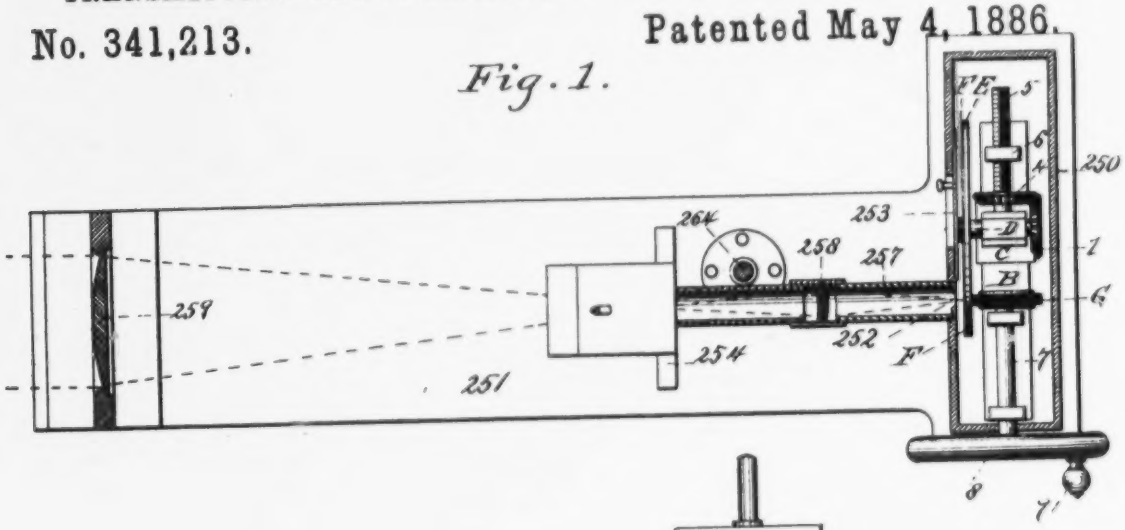

Fig. 3.

Fig. 2.

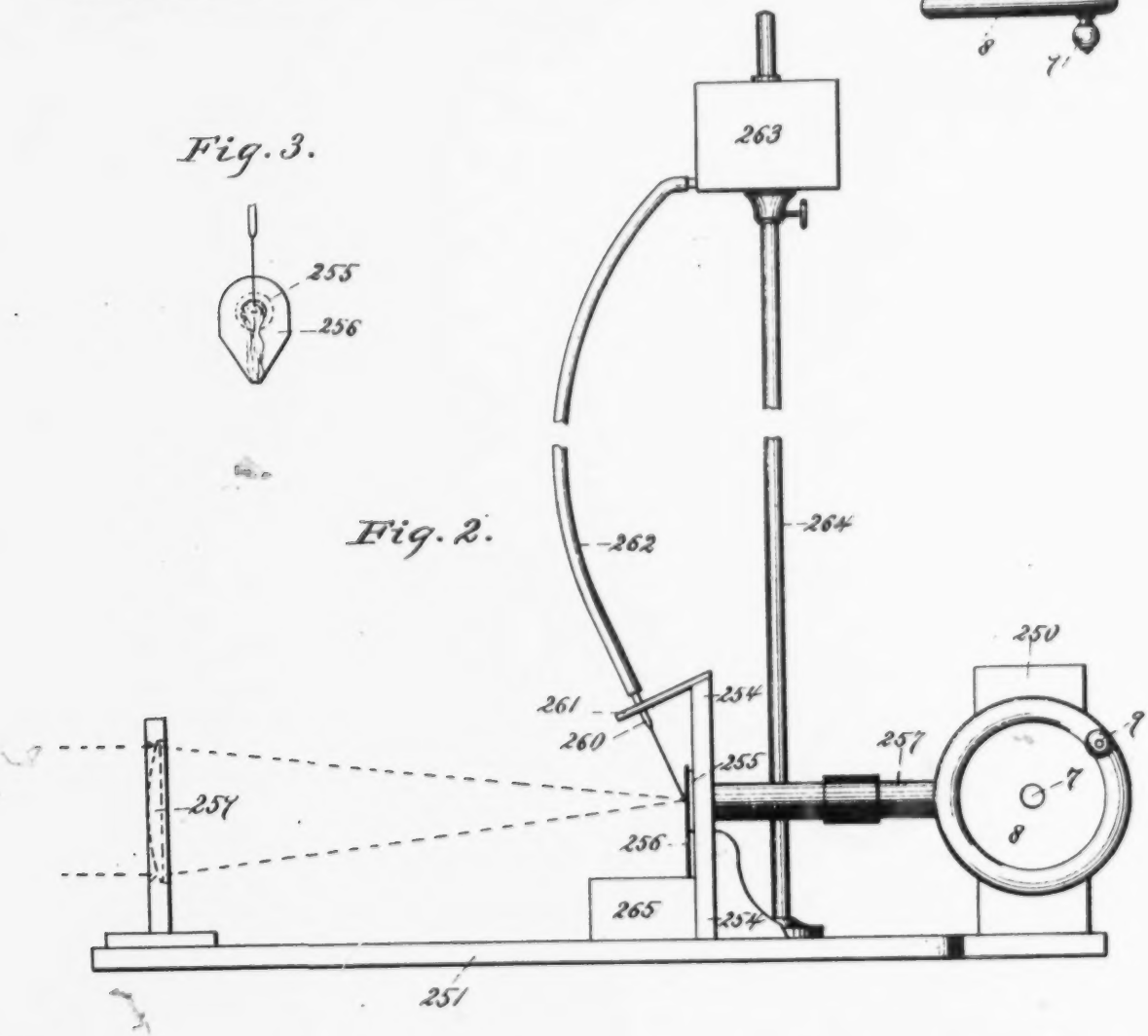

Witnesses
Wm. Kirkus Jnr.
Philip Lawrence

Inventors
Alexander Graham Bell
Chichester A. Bell and
Sumner Tainter by
A. Pollok
their attorney.

754 (No Model.) 3 Sheets—Sheet 2.

A. G. & C. A. BELL & S. TAINTER.

TRANSMITTING AND RECORDING SOUNDS BY RADIANT ENERGY.

No. 341,213. Patented May 4, 1886.

Fig. 4.

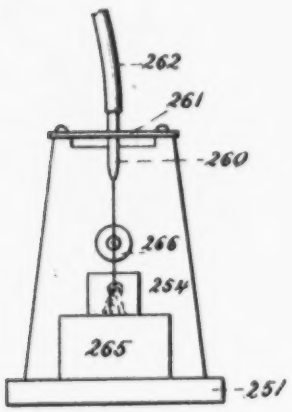

Fig. 5.

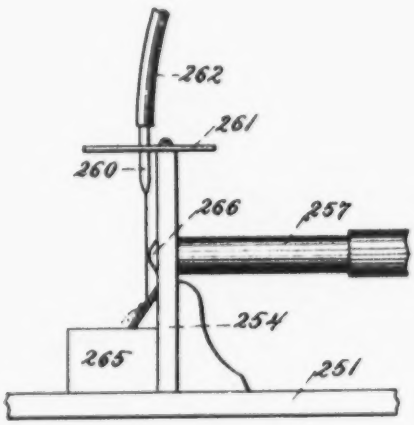

Fig. 6.

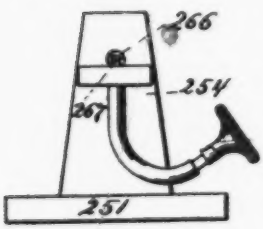

Fig. 7.

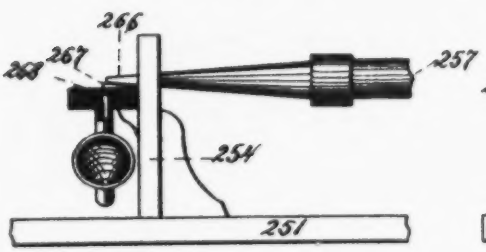

Fig. 9.

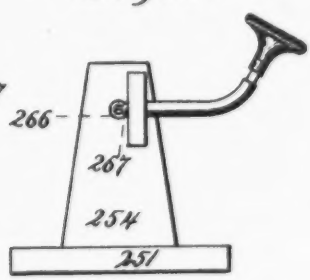

Fig. 8.

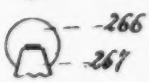

Witnesses
Wm. Kirkus Jnr.
Philip Cleaves

Inventors
Alexander Graham Bell
Chichester A. Bell and
Sumner Tainter by
A. Pollok their attorney

(No Model.) 3 Sheets—Sheet 3.

A. G. & C. A. BELL & S. TAINTER.

TRANSMITTING AND RECORDING SOUNDS BY RADIANT ENERGY.

No. 341,213. Patented May 4, 1886.

Fig. 10.

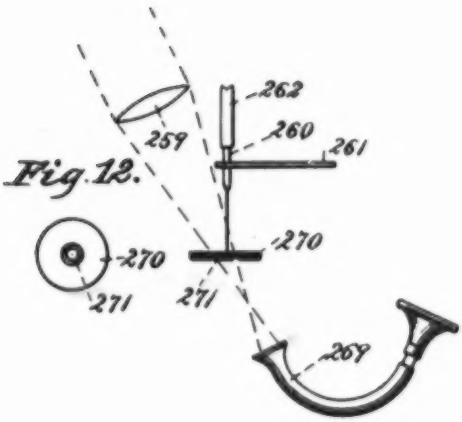

Fig. 12.

Fig. 11.

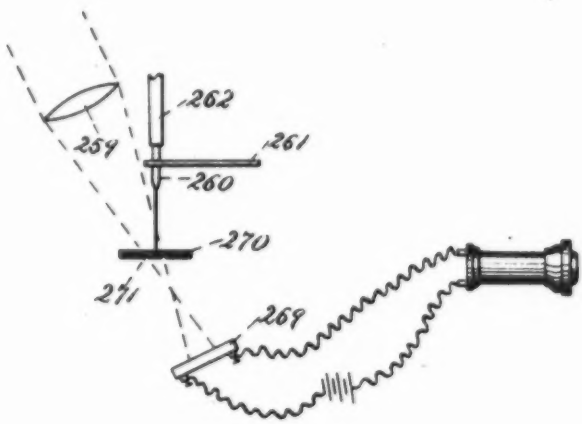

Fig. 13.

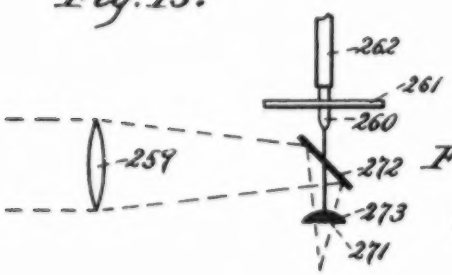

Fig. 14.

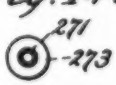

Fig. 15.

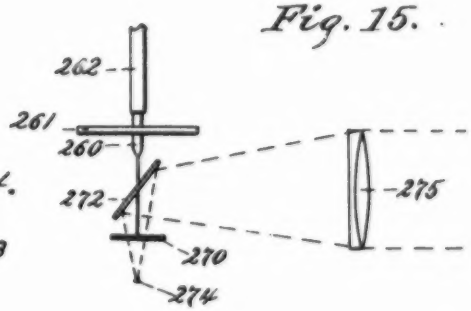

Fig. 16.

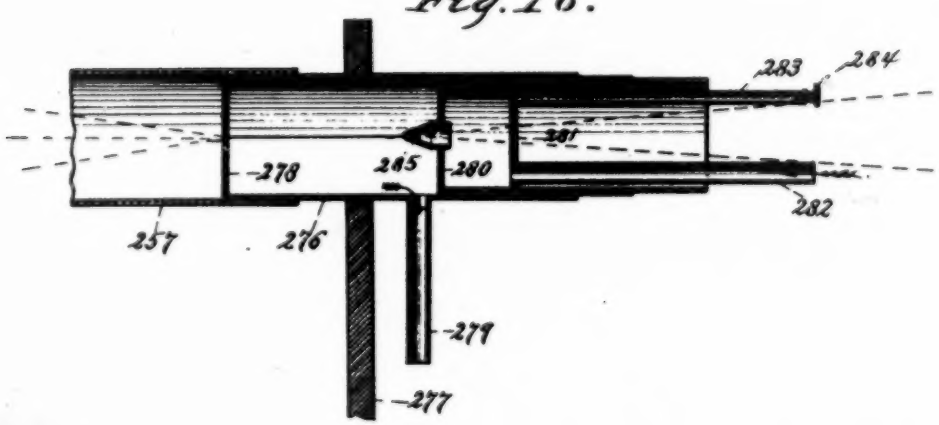

Witnesses
Wm. Kirkus Jun.

Inventors
Alexander Graham Bell
Chichester A. Bell
S. Tainter

UNITED STATES PATENT OFFICE.

ALEXANDER GRAHAM BELL, CHICHESTER A. BELL, AND SUMNER TAINTER, OF WASHINGTON, DISTRICT OF COLUMBIA.

TRANSMITTING AND RECORDING SOUNDS BY RADIANT ENERGY.

SPECIFICATION forming part of Letters Patent No. 341,213, dated May 4, 1886.

Application filed November 18, 1885. Serial No. 183,539. (No model.)

To all whom it may concern:

Be it known that we, ALEXANDER GRAHAM BELL, CHICHESTER A. BELL, and SUMNER TAINTER, all of Washington, in the District of Columbia, have invented a new and useful Improvement in Transmitting and Recording Sounds by Means of Radiant Energy, which improvement is fully set forth in the following specification.

This invention relates to a new method of and means for throwing a beam of light or other radiant energy into vibrations corresponding to sound-waves, and also to a new method of and apparatus for producing a photographic record of such vibrations.

According to the first part of the invention the vibrations to be impressed upon the radiant beam are produced in a fluid (liquid or gas, but specially liquid) in motion, and this fluid impresses the vibrations upon the radiant beam. For this purpose special application is made of what we term "sensitive jets."

It has been found that jets of water, air, and other fluids issuing from a proper jet-orifice under suitable pressure respond very readily to sonorous vibrations within certain limits, and that they also can be made to amplify the vibrations impressed upon them. The production of these sensitive jets and their use for various telephonic and radiophonic purposes is described in the applications of Chichester A. Bell, (above named,) filed May 1, 1884, and officially numbered 129,946, 129,947, and 129,948. As described in said applications, so far as their use in the photophone-transmitter is concerned, they mechanically throw into vibrations the mirror or device which is the true beam changer.

In the present invention the sensitive jet is utilized for intercepting, reflecting, refracting, diffusing, or otherwise altering the intensity, size, or direction of the radiant beam or a part thereof. Preferably the radiant energy is transmitted through a film of liquid; but there are various other ways of impressing the vibrations of the jet or jet fluid directly upon the radiant beam, some of which will be hereinafter described. The vibration of the it is not designed to limit the invention thereto, it being broadly new to vary a beam of radiant energy by fluid in motion, so as to impress on said beam vibrations corresponding to sound. This part of the invention also consists, broadly, in the method of impressing vibrations upon a radiant beam by transmitting the same through a varying film or body of more or less transparent material. Heretofore it was either reflected or intercepted more or less by an opaque body.

According to the second part of the invention a variable beam of light is caused to pass through a fine slit or other opening, and an image of the slit enlarged, diminished, or of the same size is then projected, by means of one or more lenses or other suitable devices, upon a sensitized tablet which is moved progressively in front of the slit. The tablet may be any suitable sheet or strip of sensitized material. Glass plates coated with a dry photographic film have been used successfully. The light is condensed by lenses, reflectors, or other suitable means, so that a very powerful beam can be thrown on the sensitized tablet. In view of the short time during which any part of the tablet is exposed, it is very advantageous to be able to employ a powerful light. Sometimes it is desirable to use a second slit close to the recording-tablet— as, for example, when the image formed by a slit of varying length or width is magnified and it is desired to restrict the enlargement to the variable dimension, and also when a highly-magnified image of a slit through which light of varying intensity is passed is thrown upon the tablet, and it is desired to restrict the action to a small area on the photographic plate, it being difficult to operate with the main opening or slit small enough.

According to the third part of the invention a beam of variable intensity is allowed to record itself upon the sensitized tablet. The record formed by such a beam exhibits a variable depth corresponding to the vibrations which produced the variation in intensity in the beam. The best mode of producing the beam of variable intensity is by trans-

A. G. & C. A. BELL & S. TAINTER.

TRANSMITTING AND RECORDING SOUNDS BY RADIANT ENERGY.

No. 341,213. Patented May 4, 1886.

Fig. 10.

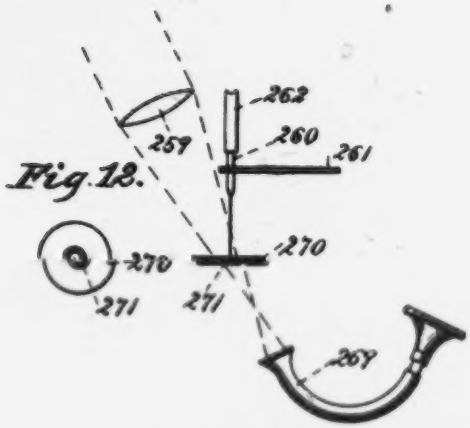

Fig. 12.

Fig. 11.

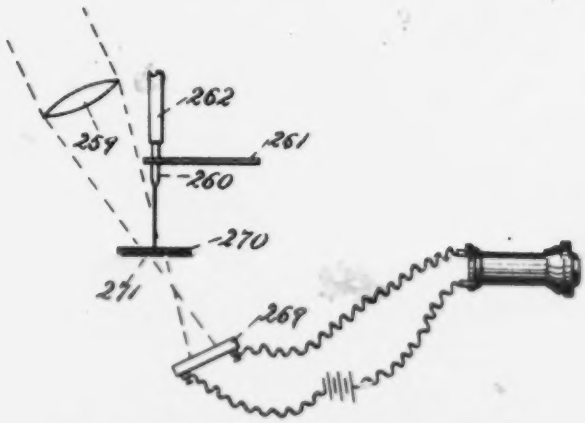

Fig. 13.

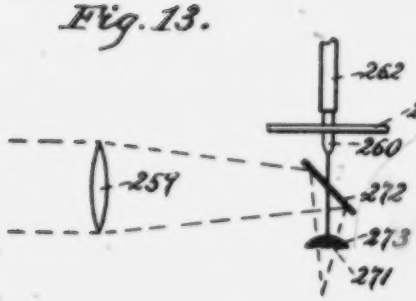

Fig. 14.

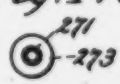

Fig. 15.

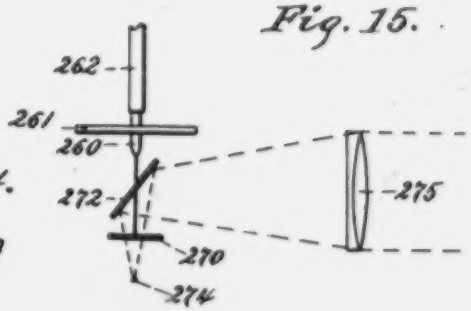

Fig. 16.

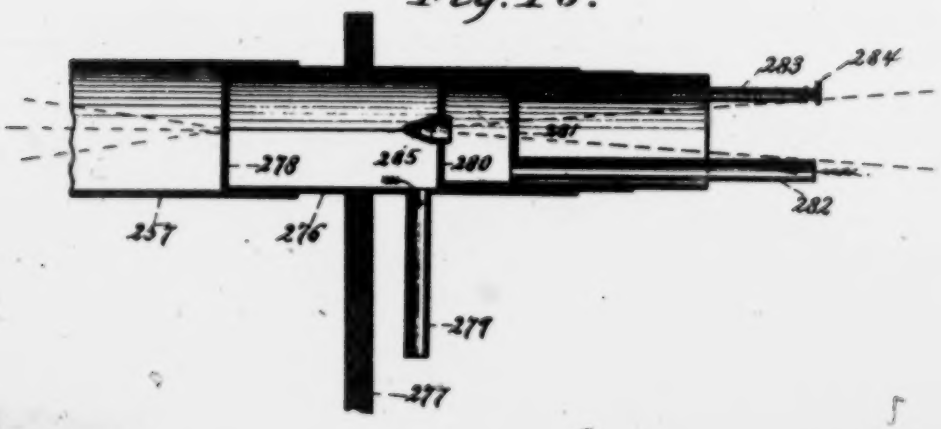

Witnesses
Wm. Kirkus Jr.
Philip Mauro

Inventors
Alexander Graham Bell
Chichester A. Bell &
Sumner Tainter by
A. Pollok their attorney.

UNITED STATES PATENT OFFICE.

ALEXANDER GRAHAM BELL, CHICHESTER A. BELL, AND SUMNER TAINTER, OF WASHINGTON, DISTRICT OF COLUMBIA.

TRANSMITTING AND RECORDING SOUNDS BY RADIANT ENERGY.

SPECIFICATION forming part of Letters Patent No. 341,213, dated May 4, 1886.

Application filed November 18, 1885. Serial No. 183,038. (No model.)

To all whom it may concern:

Be it known that we, ALEXANDER GRAHAM BELL, CHICHESTER A. BELL, and SUMNER TAINTER, all of Washington, in the District of Columbia, have invented a new and useful Improvement in Transmitting and Recording Sounds by Means of Radiant Energy, which improvement is fully set forth in the following specification.

This invention relates to a new method of and means for throwing a beam of light or other radiant energy into vibrations corresponding to sound-waves, and also to a new method of and apparatus for producing a photographic record of such vibrations.

According to the first part of the invention the vibrations to be impressed upon the radiant beam are produced in a fluid (liquid or gas, but specially liquid) in motion, and this fluid impresses the vibrations upon the radiant beam. For this purpose special application is made of what we term "sensitive jets."

It has been found that jets of water, air, and other fluids issuing from a proper jet-orifice under suitable pressure respond very readily to sonorous vibrations within certain limits, and that they also can be made to amplify the vibrations impressed upon them. The production of these sensitive jets and their use for various telephonic and radiophonic purposes is described in the applications of Chichester A. Bell, (above named,) filed May 1, 1884, and officially numbered 129,946, 129,947, and 129,948. As described in said applications, so far as their use in the photophone-transmitter is concerned, they mechanically throw into vibrations the mirror or device which is the true beam changer.

In the present invention the sensitive jet is utilized for intercepting, reflecting, refracting, diffusing, or otherwise altering the intensity, size, or direction of the radiant beam or a part thereof. Preferably the radiant energy is transmitted through a film of liquid; but there are various other ways of impressing the vibrations of the jet or jet fluid directly upon the radiant beam, some of which will be hereinafter described. The vibration of the beam by sensitive jets is considered a special improvement, and is particularly claimed, but it is not designed to limit the invention thereto, it being broadly new to vary a beam of radiant energy by fluid in motion, so as to impress on said beam vibrations corresponding to sound. This part of the invention also consists, broadly, in the method of impressing vibrations upon a radiant beam by transmitting the same through a varying film or body of more or less transparent material. Heretofore it was either reflected or intercepted more or less by an opaque body.

According to the second part of the invention a variable beam of light is caused to pass through a fine slit or other opening, and an image of the slit enlarged, diminished, or of the same size is then projected, by means of one or more lenses or other suitable devices, upon a sensitized tablet which is moved progressively in front of the slit. The tablet may be any suitable sheet or strip of sensitized material. Glass plates coated with a dry photographic film have been used successfully. The light is condensed by lenses, reflectors, or other suitable means, so that a very powerful beam can be thrown on the sensitized tablet. In view of the short time during which any part of the tablet is exposed, it is very advantageous to be able to employ a powerful light. Sometimes it is desirable to use a second slit close to the recording-tablet— as, for example, when the image formed by a slit of varying length or width is magnified and it is desired to restrict the enlargement to the variable dimension, and also when a highly-magnified image of a slit through which light of varying intensity is passed is thrown upon the tablet, and it is desired to restrict the action to a small area on the photographic plate, it being difficult to operate with the main opening or slit small enough.

According to the third part of the invention a beam of variable intensity is allowed to record itself upon the sensitized tablet. The record formed by such a beam exhibits a variable depth corresponding to the vibrations which produced the variation in intensity in the beam. The best mode of producing the beam of variable intensity is by transmission through a jet film, as before indicated; but there are other modes of producing such

a beam—as, for example, by using a variable source of light.

The invention further comprises certain special devices and combinations of devices and of steps, as hereinafter set forth.

In the accompanying drawings, Figures 1 and 2 are a horizontal section and side elevation, respectively, of an apparatus for photographing sound-vibrations in accordance with the invention, and Fig. 3 is a detail view in front elevation. Figs. 4 and 5 are front and side elevations, respectively, of a modified transmitting or beam-changing apparatus, also constructed in acordance with the invention. Figs. 6, 7, 8, and 9 illustrate transmitting apparatus which may be used in carrying the invention or parts thereof into effect, but which is not claimed, except when used in combination, as hereinafter specified. Figs. 10, 11, 12, 13, 14, and 15 are views of modified forms of transmitting or beam-changing apparatus constructed in accordance with the invention and adapted for use as radiophonic transmitters; and Fig. 16 is a sectional view, on an enlarged scale, of still another form of transmitting or beam-changing apparatus, also constructed in accordance with the invention.

The same characters indicate like parts in all the figures.

Referring to Figs. 1, 2, and 3, the close box 250, placed at one end of the base 251, contains the tablet F and the means for moving the same. These means, as shown, are substantially as described in the application of A. G. Bell and S. Tainter, filed June 25, 1885, and officially numbered 170,044. The tablet is or may be a glass disk coated with a sensitive film, such as used in instantaneous photography. It is mounted on the arbor D, turning in bearings on the slide C, which moves in ways of the frame B. A metal disk, E, on the arbor forms a backing to the tablet. The opposite end of the arbor carries a bevel-gear, 1, which engages a similar gear, 4, on the end of screw 5. This screw is journaled in a bearing in the slide C, and is tapped through a stationary lug, 6, on the frame B. As the arbor D is revolved the screw 5 is turned also, and in consequence of its engagement with the lug 6 it moves the slide C lengthwise of the frame B. The rotation is communicated to the arbor D from the shaft 7, journaled in bearings of the frame B, the outer end projecting through the end wall of the box 250.

On the outer end of shaft 7 is fixed the fly-wheel 8, which has a crank-handle, 9, and at the other the friction-pinion G, which bears against the back of the disk E and communicates motion to it, and consequently also to tablet F and arbor D.

On the other side of tablet F from the friction-pinion G is a hole, 252, in the wall of the box, which hole can be closed or opened at will by shifting the slide 253.

At a suitable distance from the box 250 the On the front of this standard is fastened a plate, 255, of opaque material, (brass, for example,) which is perforated by a narrow slit, (see Fig. 3,) of, say, five one-hundreths of an inch in length by one one-hundreth of an inch in width, and on the outer face of this plate is fastened a transparent sheet, 256, of glass or other suitable material. Behind the plate the standard is perforated and the end of the tube 257 fits the perforation. The opposite end of the tube makes a close joint with the front of the box 250 and surrounds the hole 252 therein. Thus no light is admitted to the box except what passes through the slit.

In the tube 257 is a lens, 258. It is so shaped and the length of the tube so adjusted that it projects an image of the slit upon the tablet F. Radiant energy from any suitable source (the sun's rays, for example, reflected by a common heliostat) is concentrated on the slit by the condensing-lens 259. The amount of light which is allowed to pass through the slit is varied by means of a varying film of liquid—such as a solution of bichromate of potash—on the the outside of the glass 256. This film is formed by the jet from the jet-tube 260. This tube is set in the sound-board 261, which is fastened to the top of the standard 254, and is so adjusted that the jet strikes the glass, say, two-tenths of an inch above the slit in the plate 255, as shown in Fig. 3. The jet-tube is supplied through the flexible (soft rubber) pipe 262, from the elevated reservoir 263, supported by and adjustable upon the rod 264, which is fixed at the bottom to the base 251. The jet-orifice may be three one-hundreths of an inch in diameter and the reservoir be about four feet above the orifice. Below the glass is a receptacle, 265, for the jet liquid.

In operation the wheel 8 is turned at an even rate of speed, which gives an even speed also to those parts of the surface of the tablet which successively come opposite the hole 252. This is very desirable, because it gives an even exposure to every part of the surface. If the light were constant, a spiral line would be formed on the sensitized tablet of constant width and practically uniform shade, depth, or intensity. On talking to or in the vicinity of the sound-board, or of the jet itself, (a sound-board not being essential,) the jet is thrown into vibration. The jet may also be otherwise thrown into vibration, as described in the before-mentioned applications filed May 1, 1884. The film over the slit varies in conformity with the vibrations impressed upon the jet and allows more or less light to fall upon the tablet. The size of the image projected upon the tablet remains constant. It is the intensity of the light which is changed by this apparatus. After the whole surface of the tablet has been exposed, or so much as is desired, it is removed from the box and developed by any ordinary or suitable photographic means. In this way a very perfect

The vibrations impressed upon the jet are also by it amplified as they are propagated lengthwise of the jet, so that the effective variations in the jet film are increased. This amplification further tends to improve the record.

In the apparatus shown in Figs. 4 and 5 the jet passes in front of the slit which is formed in the end of the block 266, and strikes against the inclined plate, off which it runs into the receptacle 265. As the jet is vibrated the cross-section of the part opposite the slit expands and contracts, and the vibrations are recorded as a line of varying width. The recording apparatus is or may be as shown in Figs. 1 and 2.

In Figs. 6, 7, and 8 a flat style, 267, of somewhat greater width than the length of the slit in the block 266, (see Fig. 8,) is attached to the diaphragm 268, and is so arranged that its upper end overlies the slit. The light therefore passes between the top of the style and the upper edge of the slit. The diaphragm is vibrated by speaking into the communicating sound-tube.

The recording apparatus may be as shown in Figs. 1 and 2. The edge of the vibrating style being parallel with the length of the slit, and consequently parallel with the radius of the tablet through the image thereon, the record will be of practically uniform width, but variable in shade, depth, or intensity. The effect, it will be observed, is here produced not by varying the intensity of the image, as in the apparatus of Figs. 1 and 2, but by the less perfect mode of varying its size.

The apparatus of Fig. 9 is the same as that of Figs. 6, 7, and 8, except that the style vibrates lengthwise of the slit, increasing and diminishing its length. Consequently the record will be of varying width. This form of record has certain advantages. It can, for example, easily be magnified, so that the smallest vibrations become very evident. The same is true also of the record made by the jet arranged as in Figs. 4 and 5. In order to produce the desired enlargement, the lens in the tube 257 should be adapted and adjusted to throw an enlarged image of the slit on the tablet, and the hole 252 in the side of the box should be a narrow slit, so that the variable dimension—that is, the length—of the image only is enlarged. Any considerable increase in the width of the image would cause the successive images to overlap one another to such an extent as to impair the value of the record.

In Figs. 10 and 11 the light passes through an annular opening and is received upon a radiophonic receiver, 269. The jet plays upon the upper side of a sheet of glass, 270, on whose lower surface silver has been deposited, leaving uncovered the annular space 271. (See Fig. 12.)

The receiver of Fig. 10 is a lamp-black re-

The instruments are described in Letters Patent granted to A. G. Bell and Sumner Tainter, (above named,) jointly or separately, and numbered and dated, respectively, 235,199, December 7, 1880, 235,497, December 14, 1880, 235,590, December 14, 1880, and 241,909, May 24, 1881.

In Figs. 10 and 11 the light passes obliquely through the jet film.

In Fig. 13 a mirror, 272, is so placed as to reflect the rays and make them normal, or nearly so, to the curved film, which spreads over the upper surface of the lens 273. The jet passes through the hole in the mirror.

In Fig. 14 the silver coating on the bottom of the lens is shown, an annular clear space, 271, being left for the passage of the light.

In Fig. 15 the sheet of glass 270 is used in place of the lens, and the light is supposed to issue from the point 274. It will be reflected from the mirror 272 after passing through the jet film, and the rays being rendered parallel by the lens 275 will pass to a distant station, to be there received on any suitable radiophonic receiver, or a recording apparatus, such as shown in Figs. 1 and 2, the jet and jet film being omitted.

In Fig. 16 the tube 276 is fixed in an upright sound-board, 277. One end of the tube is closed by the glass plate 278, and one side thereof is provided with an outlet, 279. In the open end of the tube 276 is inserted the metal cup 280, a packing of leather or other suitable material being interposed to make a water-tight joint. The cup, being held by friction, can be adjusted in and out. A chamber is formed in the cup by a partition whose center 281 is of glass. A liquid-inlet pipe, 282, communicates with the chamber at the bottom, and an air-escape pipe, 283, at the top. A screw-plug, 284, closes the pipe 283 when the apparatus is in use. The jet tube or nipple 285 is fixed in the wall of the chamber opposite the partition.

When the apparatus is to be used for recording, the tube 276 is slipped into the tube 257 of Figs. 1 and 2, and the lens 258 is so adjusted as to throw an image of the jet-orifice on the recording-tablet.

In operation the jet liquid is admitted from the elevated reservoir 263 into the chamber in cup 280 by the pipe 282, and when the chamber is full the air-escape is closed by the plug 284. The jet from the nipple 285 plays against the glass 278, and the waste liquid escapes by the pipe 279. The light from the condensing-lens 259 passes through the glass 281 and the liquid in the chamber; thence through the jet-orifice, and, traversing the jet lengthwise, is focused upon the tablet. On impressing vibrations upon the jet, by talking to the sounding-board or otherwise, the intensity of the light transmitted is varied

source of light.

The invention further comprises certain special devices and combinations of devices and of steps, as hereinafter set forth.

In the accompanying drawings, Figures 1 and 2 are a horizontal section and side elevation, respectively, of an apparatus for photographing sound-vibrations in accordance with the invention, and Fig. 3 is a detail view in front elevation. Figs. 4 and 5 are front and side elevations, respectively, of a modified transmitting or beam-changing apparatus, also constructed in acordance with the invention. Figs. 6, 7, 8, and 9 illustrate transmitting apparatus which may be used in carrying the invention or parts thereof into effect, but which is not claimed, except when used in combination, as hereinafter specified. Figs. 10, 11, 12, 13, 14, and 15 are views of modified forms of transmitting or beam-changing apparatus constructed in accordance with the invention and adapted for use as radiophonic transmitters; and Fig. 16 is a sectional view, on an enlarged scale, of still another form of transmitting or beam-changing apparatus, also constructed in accordance with the invention.

The same characters indicate like parts in all the figures.

Referring to Figs. 1, 2, and 3, the close box 250, placed at one end of the base 251, contains the tablet F and the means for moving the same. These means, as shown, are substantially as described in the application of A. G. Bell and S. Tainter, filed June 25, 1885, and officially numbered 170,044. The tablet is or may be a glass disk coated with a sensitive film, such as used in instantaneous photography. It is mounted on the arbor D, turning in bearings on the slide C, which moves in ways of the frame B. A metal disk, E, on the arbor forms a backing to the tablet. The opposite end of the arbor carries a bevel-gear, 1, which engages a similar gear, 4, on the end of screw 5. This screw is journaled in a bearing in the slide C, and is tapped through a stationary lug, 6, on the frame B. As the arbor D is revolved the screw 5 is turned also, and in consequence of its engagement with the lug 6 it moves the slide C lengthwise of the frame B. The rotation is communicated to the arbor D from the shaft 7, journaled in bearings of the frame B, the outer end projecting through the end wall of the box 250.

On the outer end of shaft 7 is fixed the fly-wheel 8, which has a crank-handle, 9, and at the other the friction-pinion G, which bears against the back of the disk E and communicates motion to it, and consequently also to tablet F and arbor D.

On the other side of tablet F from the friction-pinion G is a hole, 252, in the wall of the box, which hole can be closed or opened at will by shifting the slide 253.

At a suitable distance from the box 250 the standard 254 is firmly fixed on the base 251. plate, 255, of opaque material, (brass, for example,) which is perforated by a narrow slit, (see Fig. 3,) of, say, five one-hundreths of an inch in length by one one-hundreth of an inch in width, and on the outer face of this plate is fastened a transparent sheet, 256, of glass or other suitable material. Behind the plate the standard is perforated and the end of the tube 257 fits the perforation. The opposite end of the tube makes a close joint with the front of the box 250 and surrounds the hole 252 therein. Thus no light is admitted to the box except what passes through the slit.

In the tube 257 is a lens, 258. It is so shaped and the length of the tube so adjusted that it projects an image of the slit upon the tablet F. Radiant energy from any suitable source (the sun's rays, for example, reflected by a common heliostat) is concentrated on the slit by the condensing-lens 259. The amount of light which is allowed to pass through the slit is varied by means of a varying film of liquid—such as a solution of bichromate of potash—on the the outside of the glass 256. This film is formed by the jet from the jet-tube 260. This tube is set in the sound-board 261, which is fastened to the top of the standard 254, and is so adjusted that the jet strikes the glass, say, two-tenths of an inch above the slit in the plate 255, as shown in Fig. 3. The jet-tube is supplied through the flexible (soft rubber) pipe 262, from the elevated reservoir 263, supported by and adjustable upon the rod 264, which is fixed at the bottom to the base 251. The jet-orifice may be three one hundreths of an inch in diameter and the reservoir be about four feet above the orifice. Below the glass is a receptacle, 265, for the jet liquid.

In operation the wheel 8 is turned at an even rate of speed, which gives an even speed also to those parts of the surface of the tablet which successively come opposite the hole 252. This is very desirable, because it gives an even exposure to every part of the surface. If the light were constant, a spiral line would be formed on the sensitized tablet of constant width and practically uniform shade, depth, or intensity. On talking to or in the vicinity of the sound-board, or of the jet itself, (a sound-board not being essential,) the jet is thrown into vibration. The jet may also be otherwise thrown into vibration, as described in the before-mentioned applications filed May 1, 1884. The film over the slit varies in conformity with the vibrations impressed upon the jet and allows more or less light to fall upon the tablet. The size of the image projected upon the tablet remains constant. It is the intensity of the light which is changed by this apparatus. After the whole surface of the tablet has been exposed, or so much as is desired, it is removed from the box and developed by any ordinary or suitable photographic means. In this way a very perfect record can be obtained of sound-vibrations.

The vibrations impressed upon the jet are also by it amplified as they are propagated lengthwise of the jet, so that the effective variations in the jet film are increased. This amplification further tends to improve the record.

In the apparatus shown in Figs. 4 and 5 the jet passes in front of the slit which is formed in the end of the block 266, and strikes against the inclined plate, off which it runs into the receptacle 265. As the jet is vibrated the cross-section of the part opposite the slit expands and contracts, and the vibrations are recorded as a line of varying width. The recording apparatus is or may be as shown in Figs. 1 and 2.

In Figs. 6, 7, and 8 a flat style, 267, of somewhat greater width than the length of the slit in the block 266, (see Fig. 8,) is attached to the diaphragm 268, and is so arranged that its upper end overlies the slit. The light therefore passes between the top of the style and the upper edge of the slit. The diaphragm is vibrated by speaking into the communicating sound-tube.

The recording apparatus may be as shown in Figs. 1 and 2. The edge of the vibrating style being parallel with the length of the slit, and consequently parallel with the radius of the tablet through the image thereon, the record will be of practically uniform width, but variable in shade, depth, or intensity. The effect, it will be observed, is here produced not by varying the intensity of the image, as in the apparatus of Figs. 1 and 2, but by the less perfect mode of varying its size.

The apparatus of Fig. 9 is the same as that of Figs. 6, 7, and 8, except that the style vibrates lengthwise of the slit, increasing and diminishing its length. Consequently the record will be of varying width. This form of record has certain advantages. It can, for example, easily be magnified, so that the smallest vibrations become very evident. The same is true also of the record made by the jet arranged as in Figs. 4 and 5. In order to produce the desired enlargement, the lens in the tube 257 should be adapted and adjusted to throw an enlarged image of the slit on the tablet, and the hole 252 in the side of the box should be a narrow slit, so that the variable dimension—that is, the length—of the image only is enlarged. Any considerable increase in the width of the image would cause the successive images to overlap one another to such an extent as to impair the value of the record.

In Figs. 10 and 11 the light passes through an annular opening and is received upon a radiophonic receiver, 269. The jet plays upon the upper side of a sheet of glass, 270, on whose lower surface silver has been deposited, leaving uncovered the annular space 271. (See Fig. 12.)

The receiver of Fig. 10 is a lamp-black receiver, and operates mechanically. That of Fig. 11 has a cell of selenium or lamp-black, which varies the resistance of an electric circuit including a magneto-telephone.

The instruments are described in Letters Patent granted to A. G. Bell and Sumner Tainter, (above named,) jointly or separately, and numbered and dated, respectively, 235,199, December 7, 1880, 235,497, December 14, 1880, 235,590, December 14, 1880, and 241,909, May 24, 1881.

In Figs. 10 and 11 the light passes obliquely through the jet film.

In Fig. 13 a mirror, 272, is so placed as to reflect the rays and make them normal, or nearly so, to the curved film, which spreads over the upper surface of the lens 273. The jet passes through the hole in the mirror.

In Fig. 14 the silver coating on the bottom of the lens is shown, an annular clear space, 271, being left for the passage of the light.

In Fig. 15 the sheet of glass 270 is used in place of the lens, and the light is supposed to issue from the point 274. It will be reflected from the mirror 272 after passing through the jet film, and the rays being rendered parallel by the lens 275 will pass to a distant station, to be there received on any suitable radiophonic receiver, or a recording apparatus, such as shown in Figs. 1 and 2, the jet and jet film being omitted.

In Fig. 16 the tube 276 is fixed in an upright sound-board, 277. One end of the tube is closed by the glass plate 278, and one side thereof is provided with an outlet, 279. In the open end of the tube 276 is inserted the metal cup 280, a packing of leather or other suitable material being interposed to make a water-tight joint. The cup, being held by friction, can be adjusted in and out. A chamber is formed in the cup by a partition whose center 281 is of glass. A liquid-inlet pipe, 282, communicates with the chamber at the bottom, and an air-escape pipe, 283, at the top. A screw-plug, 284, closes the pipe 283 when the apparatus is in use. The jet tube or nipple 285 is fixed in the wall of the chamber opposite the partition.

When the apparatus is to be used for recording, the tube 276 is slipped into the tube 257 of Figs. 1 and 2, and the lens 258 is so adjusted as to throw an image of the jet-orifice on the recording-tablet.

In operation the jet liquid is admitted from the elevated reservoir 263 into the chamber in cup 280 by the pipe 282, and when the chamber is full the air-escape is closed by the plug 284. The jet from the nipple 285 plays against the glass 278, and the waste liquid escapes by the pipe 279. The light from the condensing-lens 259 passes through the glass 281 and the liquid in the chamber; thence through the jet-orifice, and, traversing the jet lengthwise, is focused upon the tablet. On impressing vibrations upon the jet, by talking to the sounding-board or otherwise, the intensity of the light transmitted is varied correspondingly. Of course the light could be received upon a radiophonic receiver, as shown in Figs. 10 and 11.

It will be understood that where materials,

proportions, and dimensions have been given, it is only by way of example for enabling others more readily to use the several improvements, and not as limiting the invention thereto. It will also be understood that the details can be otherwise varied without departing from the spirit of the invention, and that parts of the invention can be used separately.

Where a "jet" is hereinafter referred to, a jet film is to be included in the term. The term "fluid" is used in its proper sense, and not as synonymous with liquid, although liquids are considered best suited for the purposes of the invention.

It is best to use clear water with Fig. 16, but with the photographic arrangements a saturated solution of bichromate of potash has generally been used on account of absorbent action on actinic rays.

In Figs. 10 and 11 a saturated solution of alum would probably work best, as the heat-rays are the active ones in those cases.

Having now fully described our said invention and the manner in which the same is or may be carried into effect, what we claim is—

1. The method of varying or vibrating radiant energy by producing vibrations corresponding to sound-waves in a moving fluid in the path of said energy and impressing the vibrations upon the radiant energy by the direct action of said fluid, substantially as described.

2. The method of varying or vibrating radiant energy by producing the vibrations in a sensitive jet and impressing the vibrations upon the radiant energy by the direct action of said jet or jet fluid, substantially as described.

3. The method of varying or vibrating radiant energy by impressing the vibrations corresponding to sound-waves upon a body or film of more or less transparent material and transmitting the radiant energy through said body or film, substantially as described.

4. The method of varying or vibrating radiant energy by transmitting the same through a sensitive jet of more or less transparent fluid in vibration, substantially as described.

5. The method of varying or vibrating radiant energy by directing or concentrating the same upon a jet film of a liquid and impressing the vibrations upon the jet and through the jet film upon the radiant energy, substantially as described.

6. The method of utilizing radiant energy for transmitting and recording sound-vibrations, consisting in impressing the vibrations thereon by the direct action of fluid in motion and causing the vibrated rays to fall upon an apparatus, such as a radiophonic receiver or a recording-tablet sensitive to radiant energy, substantially as described.

7. The method of utilizing radiant energy for transmitting and recording sound-vibrations by impressing the vibrations upon a sensitive jet in the path of the rays, and thereupon the radiant beam, and receiving the vibrated beam upon a sensitive apparatus, such as a radiophonic receiver or moving sensitized tablet, substantially as described.

8. The method of utilizing radiant energy for transmitting and recording sound-vibrations by transmitting the rays through a more or less transparent medium, impressing vibrations upon said medium, so as to vary the intensity of the energy transmitted, and receiving the transmitted energy upon an apparatus sensitive thereto, substantially as described.

9. The method of utilizing radiant energy by transmitting the same through the film from a jet of liquid striking a solid substance, impressing vibrations upon the jet, and receiving the transmitted energy upon an apparatus sensitive thereto, substantially as described.

10. The method of recording sound-vibrations by varying or vibrating in accordance with the sounds to be recorded a narrow beam of radiant energy, and receiving the same upon a sensitive tablet to which a uniform surface speed is imparted, substantially as described.

11. The method of recording sound-vibrations by impressing corresponding vibrations or variations upon radiant energy emanating from a point or line, such as light transmitted through a small hole or slit, and projecting an image of said point or line upon a moving sensitized tablet, substantially as described.

12. The method of recording sound-vibrations by impressing corresponding vibrations or variations upon radiant energy emanating from a point or line, and projecting an image of said point or line upon a sensitized tablet, and giving a uniform surface-speed to said tablet, substantially as described.

13. The method of recording sound-vibrations by impressing corresponding vibrations or variations upon a jet in the path of a radiant beam, and thereby vibrating or varying the beam and allowing a section of the beam to pass through a slit and fall upon a sensitive moving tablet, substantially as described.

14. The method of recording sound-vibrations by impressing corresponding vibrations or variations upon a more or less transparent film or medium, transmitting radiant energy through the same, and causing the transmitted energy, or a portion thereof, to fall as a narrow strip or line upon a moving sensitized tablet, substantially as described.

15. The combination, with means for providing or directing a beam of radiant energy, of a beam-changer consisting of a vibratory body of moving fluid in the path of said energy, for impressing vibrations or variations thereon, substantially as described.

16. The combination, with means for producing or directing a beam of radiant energy, of a sensitive jet in the path of said beam, substantially as described.

fluid sensitive to sound-vibrations and adapted to vary radiant energy transmitted through it, of means for directing a beam of radiant energy upon said fluid, so that the beam, or a part thereof, will be transmitted, substantially as described.

18. The combination, with jet-tube, supply-tube, and reservoir, of the glass sheet in the path of the jet, and the means for directing the radiant energy upon the film, which spreads out over said sheet, substantially as described.

19. The combination, with a sensitized tablet and means for moving the same, of means for directing a beam of radiant energy through a slit or small opening, and for impressing vibrations upon the said energy, and means for directing the said energy upon the moving tablet to form thereon an image of said slit or opening, substantially as described.

20. The combination, with the sensitized tablet, and the means for directing a beam of radiant energy upon the tablet, so that it forms a spot or line thereon, of mechanism for giving to the tablet a uniform surface-speed where the radiant energy falls, substantially as described.

21. The combination of the sensitized tablet inclosed in a close box, the means for moving said tablet, the tube opening into the box, the lens in the tube, the plate or block provided with a slit, and the means for directing radiant energy upon the slit and for varying or vibrating the same, substantially as described.

22. The combination, with the means for producing or directing a beam of radiant energy, of the means for producing a sensitive jet or vibratory body of fluid in the path of said beam, and a sensitive apparatus or receiver arranged to be acted upon by the energy, which is varied or vibrated by said jet or fluid, substantially as described.

23. The combination, with the means for producing or directing a beam of radiant energy, of the means for producing a more or less transparent jet film or vibratory fluid in the path of said beam, and a sensitive apparatus or receiver arranged to receive the energy transmitted through said film or fluid, substantially as described.

24. The apparatus for recording sound-vibrations photographically, consisting of the following elements in combination, namely: the condensing-lens, the plate or block provided with a slit, the means for varying the quantity or intensity of the energy transmitted through said slit, the recording-tablet, the lens for projecting an image of the slit on the tablet, and the mechanism for giving a uniform surface-speed to the tablet under said image, substantially as described.

In testimony whereof we have signed this specification in the presence of two subscribing witnesses.

ALEXANDER GRAHAM BELL.
CHICHESTER A. BELL.
SUMNER TAINTER.

Witnesses to signature of C. A. Bell:
PHILIP MAURO,
LEWIS J. MAURO.

Witnesses to signatures of A. G. Bell and S. Tainter:
PHILIP MAURO,
C. J. HEDRICK.

proportions, and dimensions have been given, it is only by way of example for enabling others more readily to use the several improvements, and not as limiting the invention thereto. It will also be understood that the details can be otherwise varied without departing from the spirit of the invention, and that parts of the invention can be used separately.

Where a "jet" is hereinafter referred to, a jet film is to be included in the term. The term "fluid" is used in its proper sense, and not as synonymous with liquid, although liquids are considered best suited for the purposes of the invention.

It is best to use clear water with Fig. 16, but with the photographic arrangements a saturated solution of bichromate of potash has generally been used on account of absorbent action on actinic rays.

In Figs. 10 and 11 a saturated solution of alum would probably work best, as the heat-rays are the active ones in those cases.

Having now fully described our said invention and the manner in which the same is or may be carried into effect, what we claim is—

1. The method of varying or vibrating radiant energy by producing vibrations corresponding to sound-waves in a moving fluid in the path of said energy and impressing the vibrations upon the radiant energy by the direct action of said fluid, substantially as described.

2. The method of varying or vibrating radiant energy by producing the vibrations in a sensitive jet and impressing the vibrations upon the radiant energy by the direct action of said jet or jet fluid, substantially as described.

3. The method of varying or vibrating radiant energy by impressing the vibrations corresponding to sound-waves upon a body or film of more or less transparent material and transmitting the radiant energy through said body or film, substantially as described.

4. The method of varying or vibrating radiant energy by transmitting the same through a sensitive jet of more or less transparent fluid in vibration, substantially as described.

5. The method of varying or vibrating radiant energy by directing or concentrating the same upon a jet film of a liquid and impressing the vibrations upon the jet and through the jet film upon the radiant energy, substantially as described.

6. The method of utilizing radiant energy for transmitting and recording sound-vibrations, consisting in impressing the vibrations thereon by the direct action of fluid in motion and causing the vibrated rays to fall upon an apparatus, such as a radiophonic receiver or a recording-tablet sensitive to radiant energy, substantially as described.

7. The method of utilizing radiant energy for transmitting and recording sound-vibrations by impressing the vibrations upon a sensitive jet in the path of the rays, and thereby causing similar vibrations to be impressed upon the radiant beam, and receiving the vibrated beam upon a sensitive apparatus, such as a radiophonic receiver or moving sensitized tablet, substantially as described.

8. The method of utilizing radiant energy for transmitting and recording sound-vibrations by transmitting the rays through a more or less transparent medium, impressing vibrations upon said medium, so as to vary the intensity of the energy transmitted, and receiving the transmitted energy upon an apparatus sensitive thereto, substantially as described.

9. The method of utilizing radiant energy by transmitting the same through the film from a jet of liquid striking a solid substance, impressing vibrations upon the jet, and receiving the transmitted energy upon an apparatus sensitive thereto, substantially as described.

10. The method of recording sound-vibrations by varying or vibrating in accordance with the sounds to be recorded a narrow beam of radiant energy, and receiving the same upon a sensitive tablet to which a uniform surface-speed is imparted, substantially as described.

11. The method of recording sound-vibrations by impressing corresponding vibrations or variations upon radiant energy emanating from a point or line, such as light transmitted through a small hole or slit, and projecting an image of said point or line upon a moving sensitized tablet, substantially as described.

12. The method of recording sound-vibrations by impressing corresponding vibrations or variations upon radiant energy emanating from a point or line, and projecting an image of said point or line upon a sensitized tablet, and giving a uniform surface-speed to said tablet, substantially as described.

13. The method of recording sound-vibrations by impressing corresponding vibrations or variations upon a jet in the path of a radiant beam, and thereby vibrating or varying the beam and allowing a section of the beam to pass through a slit and fall upon a sensitive moving tablet, substantially as described.

14. The method of recording sound-vibrations by impressing corresponding vibrations or variations upon a more or less transparent film or medium, transmitting radiant energy through the same, and causing the transmitted energy, or a portion thereof, to fall as a narrow strip or line upon a moving sensitized tablet, substantially as described.

15. The combination, with means for providing or directing a beam of radiant energy, of a beam-changer consisting of a vibratory body of moving fluid in the path of said energy, for impressing vibrations or variations thereon, substantially as described.

16. The combination, with means for producing or directing a beam of radiant energy, of a sensitive jet in the path of said beam, substantially as described.

17. The combination, with a transparent

fluid sensitive to sound-vibrations and adapted to vary radiant energy transmitted through it, of means for directing a beam of radiant energy upon said fluid, so that the beam, or a part thereof, will be transmitted, substantially as described.

18. The combination, with jet-tube, supply-tube, and reservoir, of the glass sheet in the path of the jet, and the means for directing the radiant energy upon the film, which spreads out over said sheet, substantially as described.

19. The combination, with a sensitized tablet and means for moving the same, of means for directing a beam of radiant energy through a slit or small opening, and for impressing vibrations upon the said energy, and means for directing the said energy upon the moving tablet to form thereon an image of said slit or opening, substantially as described.

20. The combination, with the sensitized tablet, and the means for directing a beam of radiant energy upon the tablet, so that it forms a spot or line thereon, of mechanism for giving to the tablet a uniform surface-speed where the radiant energy falls, substantially as described.

21. The combination of the sensitized tablet inclosed in a close box, the means for moving said tablet, the tube opening into the box, the lens in the tube, the plate or block provided with a slit, and the means for directing radiant energy upon the slit and for varying or vibrating the same, substantially as described.

22. The combination, with the means for producing or directing a beam of radiant energy, of the means for producing a sensitive jet or vibratory body of fluid in the path of said beam, and a sensitive apparatus or receiver arranged to be acted upon by the energy, which is varied or vibrated by said jet or fluid, substantially as described.

23. The combination, with the means for producing or directing a beam of radiant energy, of the means for producing a more or less transparent jet film or vibratory fluid in the path of said beam, and a sensitive apparatus or receiver arranged to receive the energy transmitted through said film or fluid, substantially as described.

24. The apparatus for recording sound-vibrations photographically, consisting of the following elements in combination, namely: the condensing-lens, the plate or block provided with a slit, the means for varying the quantity or intensity of the energy transmitted through said slit, the recording-tablet, the lens for projecting an image of the slit on the tablet, and the mechanism for giving a uniform surface-speed to the tablet under said image, substantially as described.

In testimony whereof we have signed this specification in the presence of two subscribing witnesses.

ALEXANDER GRAHAM BELL.
CHICHESTER A. BELL.
SUMNER TAINTER.

Witnesses to signature of C. A. Bell:
PHILIP MAURO,
LEWIS J. MAURO.

Witnesses to signatures of A. G. Bell and S. Tainter:
PHILIP MAURO,
C. J. HEDRICK.

(No Model.) 4 Sheets—Sheet 1.

C. A. BELL & S. TAINTER.

RECORDING AND REPRODUCING SPEECH AND OTHER SOUNDS.

No. 341,214. Patented May 4, 1886.

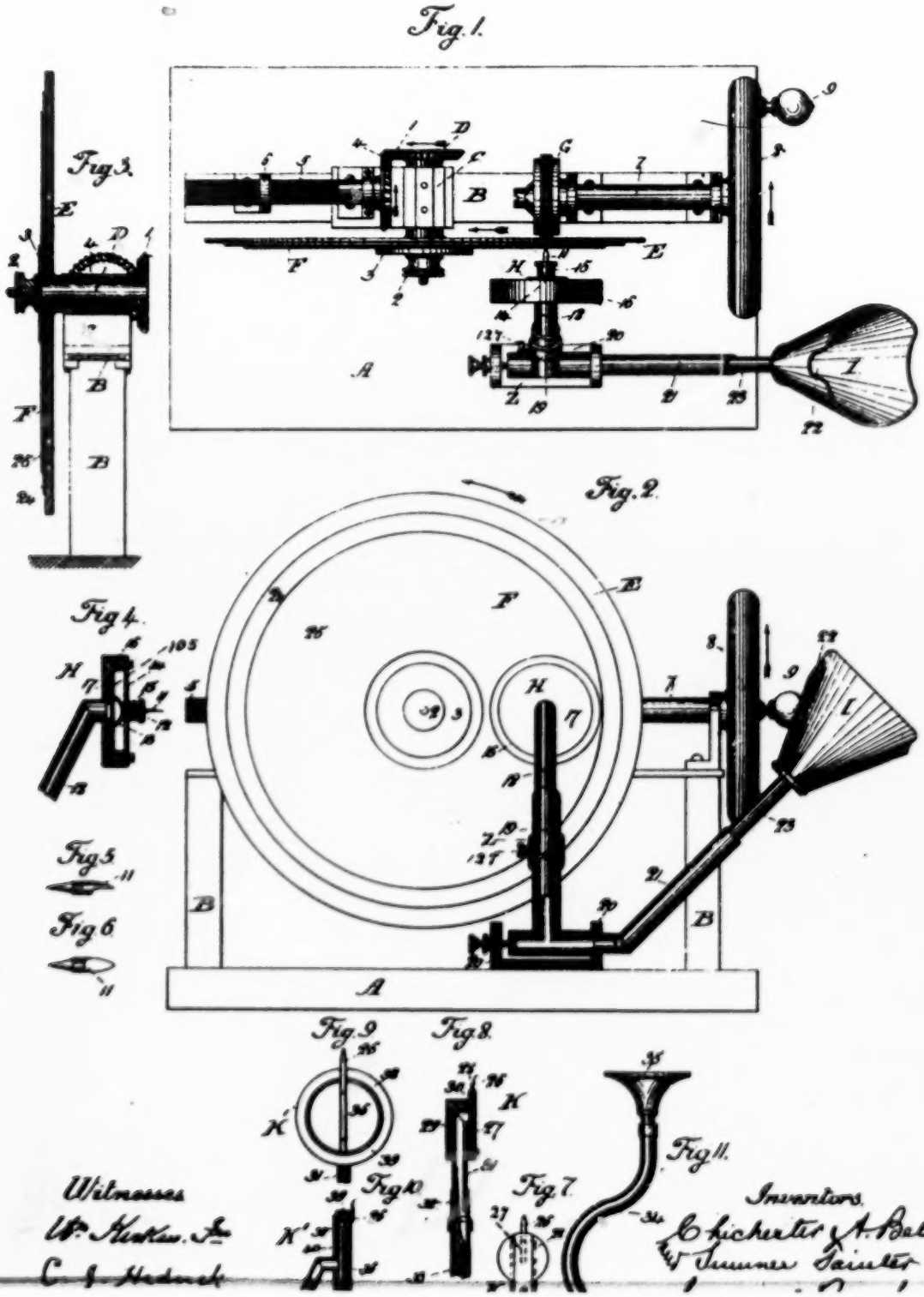

(No Model.) 4 Sheets—Sheet 1.

C. A. BELL & S. TAINTER.

RECORDING AND REPRODUCING SPEECH AND OTHER SOUNDS.

No. 341,214. Patented May 4, 1886.

Fig. 1.

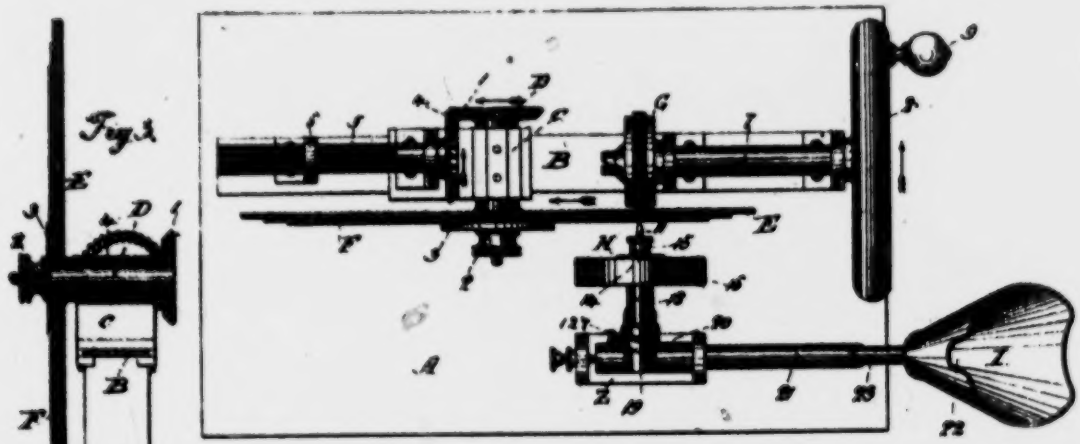

Fig. 3.

Fig. 2.

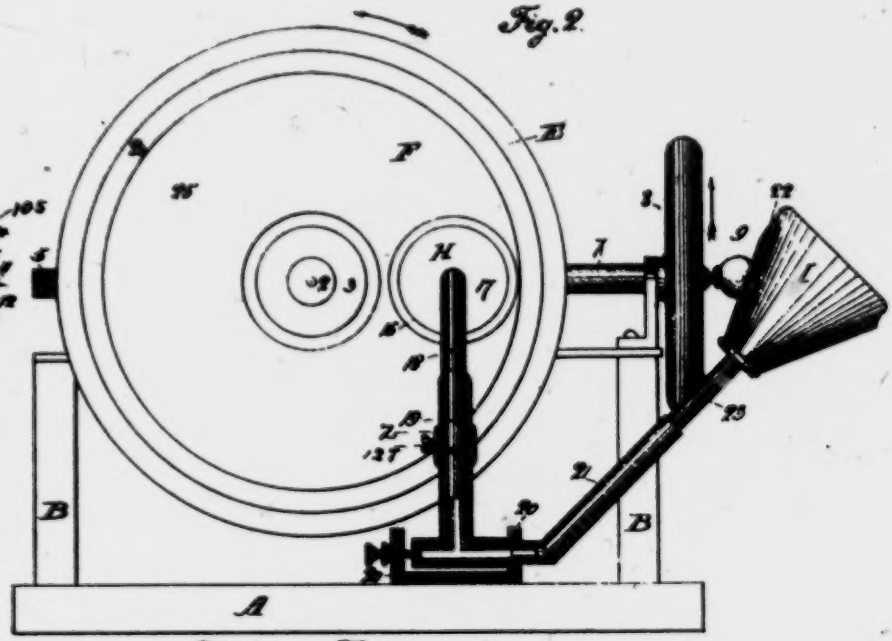

Fig. 4.

Fig. 5.

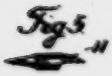

Fig. 6.

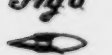

Fig. 9.

Fig. 8.

Fig. 10.

Fig. 7.

Fig. 11.

Witnesses
W. Hecker, Jr.
C. J. Hedrick

Inventors
Chichester A. Bell
Sumner Tainter
by Bark
their attorney

(No Model.) 4 Sheets—Sheet 3.

C. A. BELL & S. TAINTER.

RECORDING AND REPRODUCING SPEECH AND OTHER SOUNDS.

No. 341,214. Patented May 4, 1886.

Fig. 12.

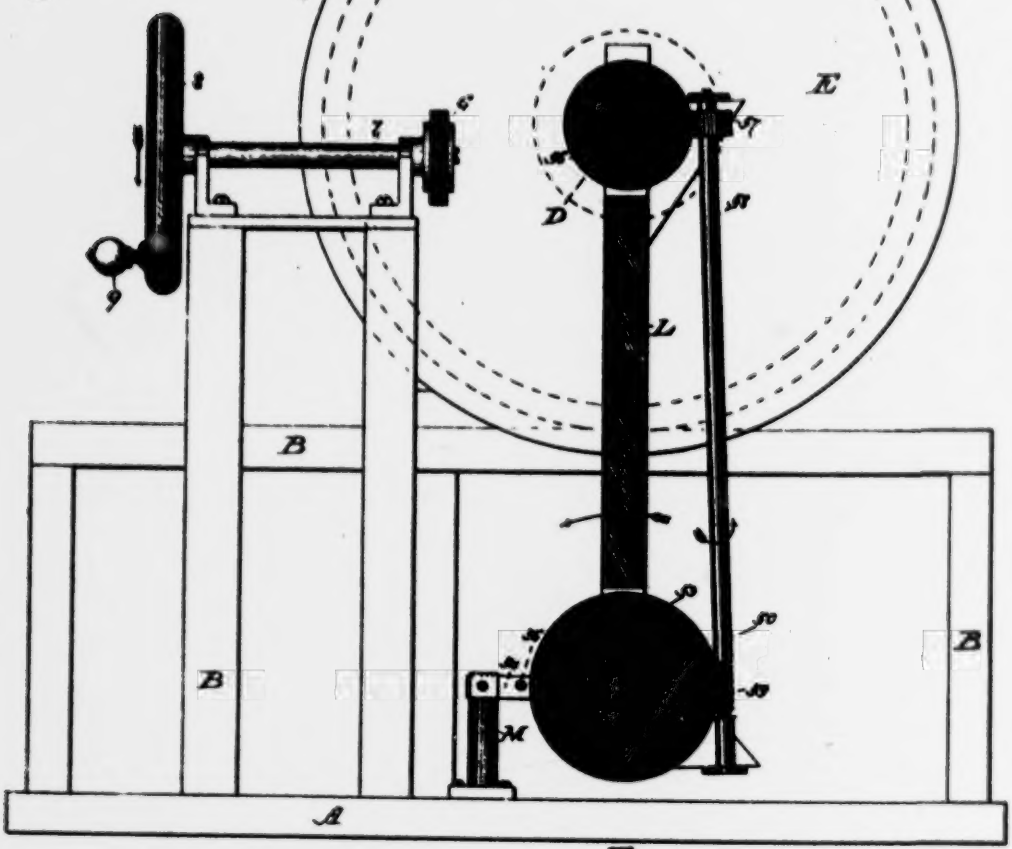

Fig. 13.

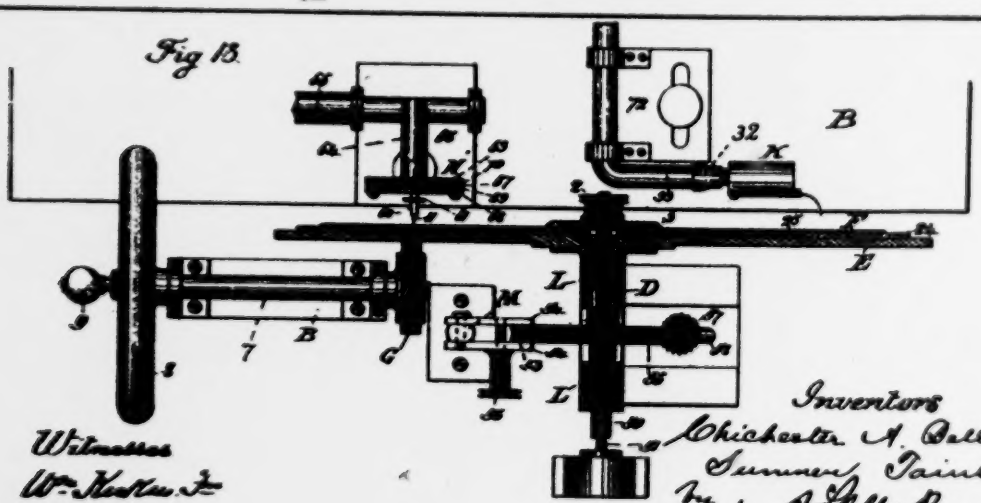

Witnesses
Wm. Hooker Jr.
C. J. Hedrick

Inventors
Chichester A. Bell
Sumner Tainter
by A. Hollor
their attorney

768

(No Model.) 4 Sheets—Sheet 3.

C. A. BELL & S. TAINTER.

RECORDING AND REPRODUCING SPEECH AND OTHER SOUNDS.

No. 341,214. Patented May 4, 1886.

Fig 14.

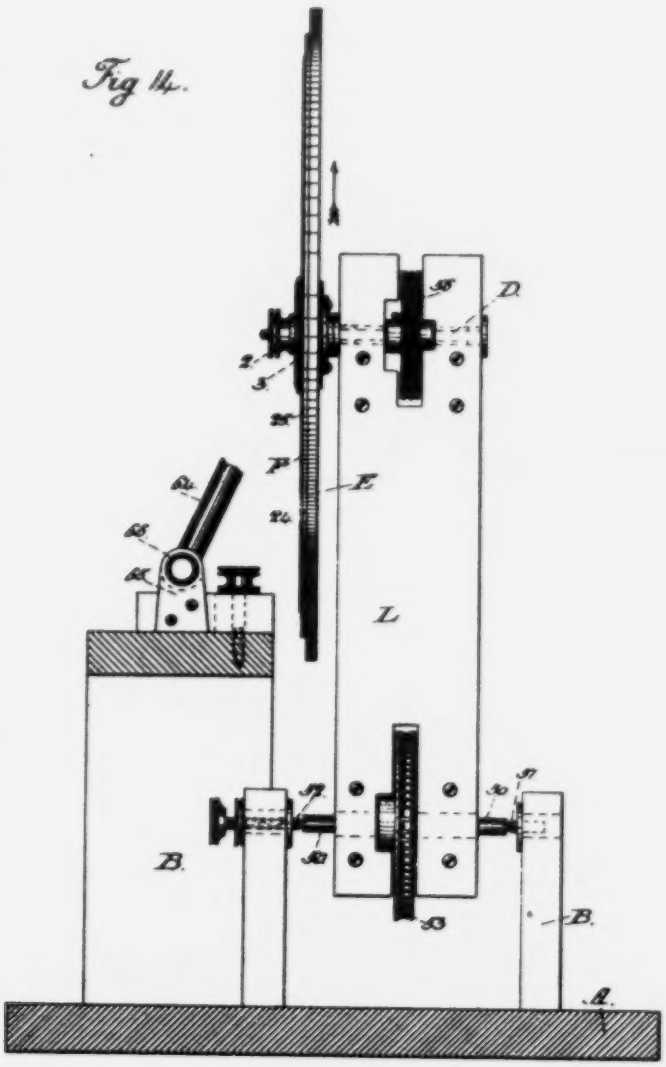

Fig. 21.

Fig. 15.

Fig. 16.

Fig. 17.

Witnesses.
Wm. Kuster Jr.
C. J. Hedrick

Inventor.
Chichester A. Bell
by Summer Tainter
by A. Pollok
their attorney

770

(No Model.) 4 Sheets—Sheet 4.

C. A. BELL & S. TAINTER.

RECORDING AND REPRODUCING SPEECH AND OTHER SOUNDS.

No. 341,214. Patented May 4, 1886.

Fig 18.

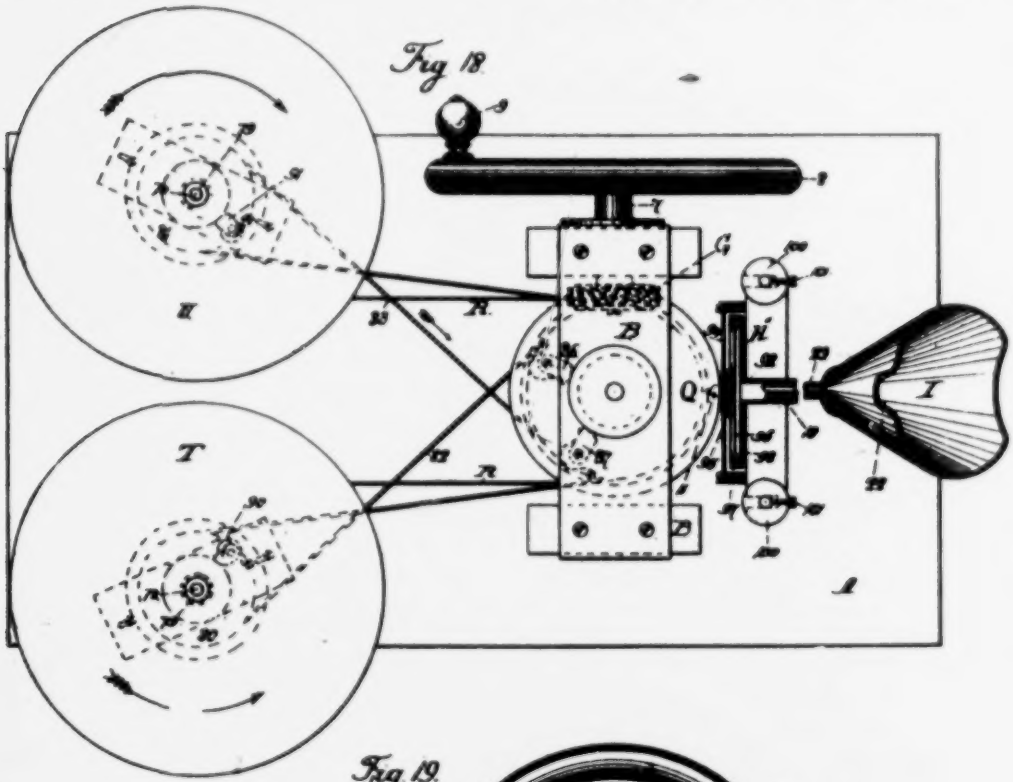

Fig 19.

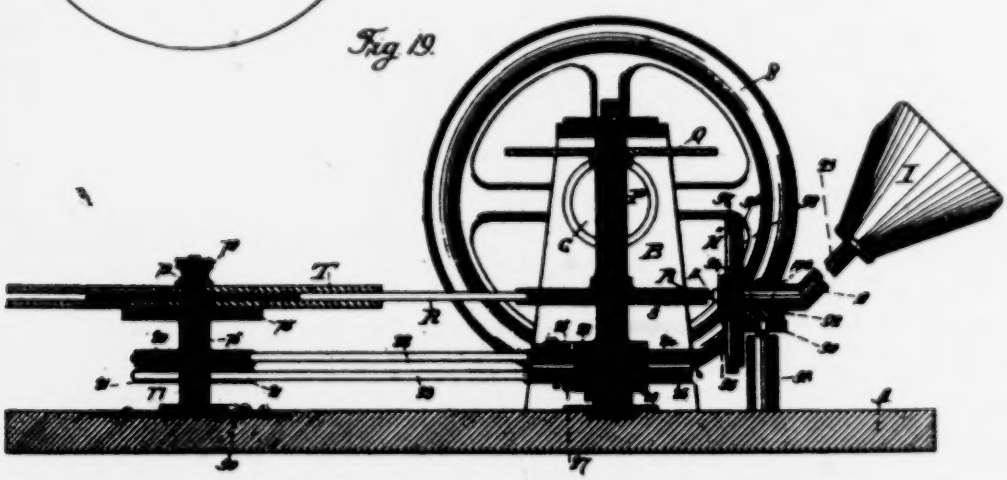

Fig 20.

Witnesses.
Wm. Keeler Jr.
C. J. Hauck

Inventors.
Chichester A. Bell
& Sumner Tainter
by . Dodge

UNITED STATES PATENT OFFICE.

CHICHESTER A. BELL AND SUMNER TAINTER, OF WASHINGTON, D. C.

RECORDING AND REPRODUCING SPEECH AND OTHER SOUNDS.

SPECIFICATION forming part of Letters Patent No. 341,214, dated May 4, 1886.

Application filed June 27, 1885. Serial No. 170,044. (No model.)

To all whom it may concern:

Be it known that we, CHICHESTER A. BELL and SUMNER TAINTER, both of Washington, in the District of Columbia, have invented a new and useful Improvement in Recording and Reproducing Speech and other Sounds, which improvement is fully set forth in the following specification.

This invention relates to the formation, in a solid substance, of elevations and depressions, or other inequalities corresponding more or less perfectly to the forms of sound-vibrations, and the reproduction, by means of such inequalities, of the sounds represented by them.

The invention consists, first, in the formation of the record or "phonogram," as it has been called, by means of a cutting-style which is vibrated by the sound-waves or sonorous vibrations to be recorded. The vibrations may be impressed upon the style directly by the impact of the sound-waves upon some device mechanically connected with or carried by the cutting-style or its support, or indirectly through the action of an electric current or other suitable vibratory medium. Heretofore a large number of contrivances have been devised for converting electrical impulses into mechanical vibrations, and they could, of course, be used for vibrating the cutting-style. Otherwise they have no relation to this part of the present invention, the essential new feature of which is the removal of material to form the record by a cutting, gouging, or graving action of the vibrating style. Heretofore the vibrating style has, as in Edison's well-known phonograph, simply indented the recording material. It has been proposed to cut the record in the edge of a strip of metal or other solid material by vibrating the strip in contact with the cutting edge of a rotary disk cutter; but this proposal is essentially different from this invention, the new mode being applicable to cutting the record upon all sorts of surfaces, and not upon strips only, and is, besides, believed to be later in time than this invention. Under this part of the invention are included the vibratory cutting-style as a new device in a sound-recorder, and the combination of the same with other devices; also the cut or engraved record itself. In this new or improved form of record been practicable with the indented records heretofore in use, but the recorded vibrations are also sharper and better defined. It is found that an indenting style smooths over the crests of the larger elevations, and also rubs out some of the finer ones.

The invention consists, secondly, in engraving or cutting the record in a waxy or amorphous, and slightly cohesive substance. Preferably, a compound of beeswax and paraffine (the latter in excess) is employed. This compound has no tendency to clog the style, but is readily removed thereby in chips or shavings. This part of the invention also consists in a recording material composed of a wax or waxy surface on a paper or pasteboard foundation. Heretofore it has been proposed to use soft paper saturated or coated with paraffine as the material for recording by the indenting method; but its use does not appear to have been successful, and an outer layer of tin-foil was therefore employed to receive the indentations.

The invention consists, thirdly, in cutting or engraving the record in the form of a groove with sloping walls, the sound-waves being represented by elevations and depressions at the bottom of the groove or otherwise. The advantage of this form of record is that it forms an efficient guide to the reproducing-style.

The invention consists, fourthly, in loosely mounting the reproducing-style so that it can readily be guided by the record. Preferably the reproducing-style, or rather what may be called the "head" of the reproducing instrument is mounted on an universal joint, and the style is pressed against the record by the yielding pressure of a spring or weight. Practically in the instruments made by us the pressure is due to the weight of the instrument, modified by the elasticity of a section of soft-rubber tube, which supports the same and constitutes a universal joint; but evidently there are many devices which can be used to mount the reproducer, so that it is free to follow the sound record or phonogram, and which, therefore, would be within the spirit of the invention. The reproducing-style,

(No Model.) 4 Sheets—Sheet 4.

C. A. BELL & S. TAINTER.

RECORDING AND REPRODUCING SPEECH AND OTHER SOUNDS.

No. 341,214. Patented May 4, 1886.

Fig 18.

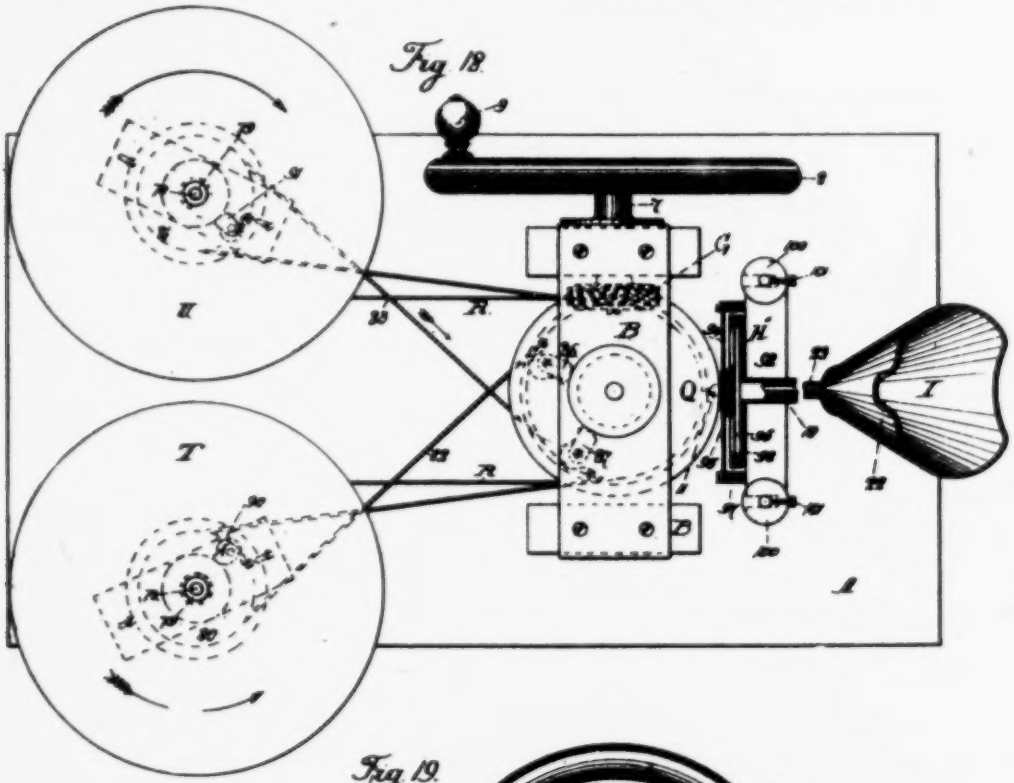

Fig 19.

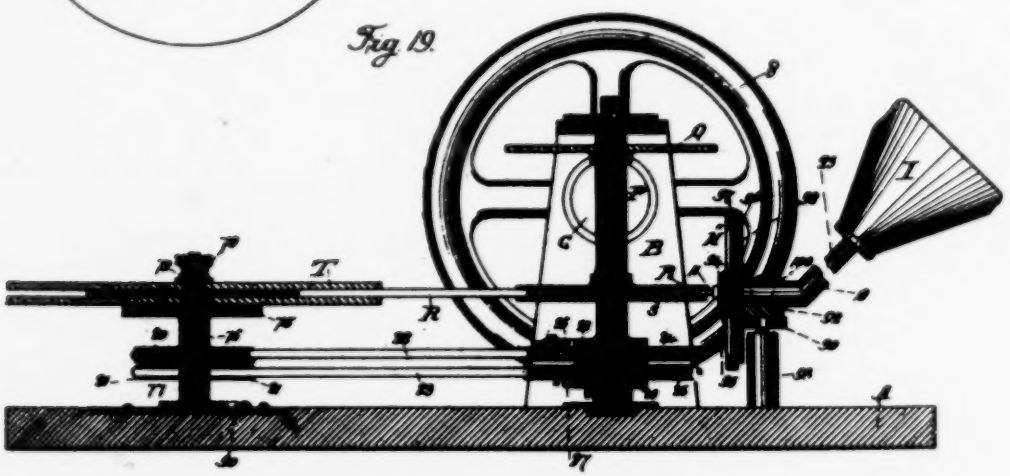

Fig 20.

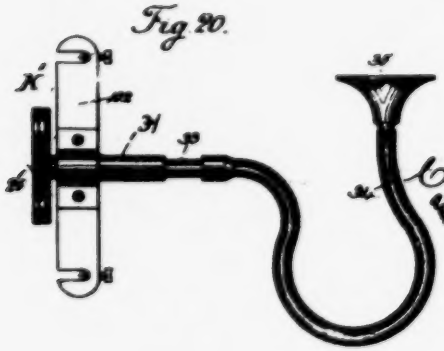

Witnesses.
Wm. Keates Jr.
C. J. Franck

Inventors.
Chichester A. Bell
& Sumner Tainter
By A. Bell
their attorney

UNITED STATES PATENT OFFICE.

CHICHESTER A. BELL AND SUMNER TAINTER, OF WASHINGTON, D. C.

RECORDING AND REPRODUCING SPEECH AND OTHER SOUNDS.

SPECIFICATION forming part of Letters Patent No. 341,214, dated May 4, 1886.

Application filed June 27, 1885. Serial No. 170,044. (No model.)

To all whom it may concern:

Be it known that we, CHICHESTER A. BELL and SUMNER TAINTER, both of Washington, in the District of Columbia, have invented a new and useful Improvement in Recording and Reproducing Speech and other Sounds, which improvement is fully set forth in the following specification.

This invention relates to the formation, in a solid substance, of elevations and depressions, or other inequalities corresponding more or less perfectly to the forms of sound-vibrations, and the reproduction, by means of such inequalities, of the sounds represented by them.

The invention consists, first, in the formation of the record or "phonogram," as it has been called, by means of a cutting-style which is vibrated by the sound-waves or sonorous vibrations to be recorded. The vibrations may be impressed upon the style directly by the impact of the sound-waves upon some device mechanically connected with or carried by the cutting-style or its support, or indirectly through the action of an electric current or other suitable vibratory medium. Heretofore a large number of contrivances have been devised for converting electrical impulses into mechanical vibrations, and they could, of course, be used for vibrating the cutting-style. Otherwise they have no relation to this part of the present invention, the essential new feature of which is the removal of material to form the record by a cutting, gouging, or graving action of the vibrating style. Heretofore the vibrating style has, as in Edison's well-known phonograph, simply indented the recording material. It has been proposed to cut the record in the edge of a strip of metal or other solid material by vibrating the strip in contact with the cutting edge of a rotary disk cutter; but this proposal is essentially different from this invention, the new mode being applicable to cutting the record upon all sorts of surfaces, and not upon strips only, and is, besides, believed to be later in time than this invention. Under this part of the invention are included the vibratory cutting-style as a new device in a sound-recorder, and the combination of the same with other devices; also the cut or engraved record itself. In this new or improved form of record not only may a larger number of words or sounds be recorded in a given surface than has been practicable with the indented records heretofore in use, but the recorded vibrations are also sharper and better defined. It is found that an indenting style smooths over the crests of the larger elevations, and also rubs out some of the finer ones.

The invention consists, secondly, in engraving or cutting the record in a waxy or amorphous, and slightly cohesive substance. Preferably, a compound of beeswax and paraffine (the latter in excess) is employed. This compound has no tendency to clog the style, but is readily removed thereby in chips or shavings. This part of the invention also consists in a recording material composed of a wax or waxy surface on a paper or pasteboard foundation. Heretofore it has been proposed to use soft paper saturated or coated with paraffine as the material for recording by the indenting method; but its use does not appear to have been successful, and an outer layer of tin-foil was therefore employed to receive the indentations.

The invention consists, thirdly, in cutting or engraving the record in the form of a groove with sloping walls, the sound-waves being represented by elevations and depressions at the bottom of the groove or otherwise. The advantage of this form of record is that it forms an efficient guide to the reproducing-style.

The invention consists, fourthly, in loosely mounting the reproducing-style so that it can readily be guided by the record. Preferably the reproducing-style, or rather what may be called the "head" of the reproducing instrument is mounted on an universal joint, and the style is pressed against the record by the yielding pressure of a spring or weight. Practically in the instruments made by us the pressure is due to the weight of the instrument, modified by the elasticity of a section of soft-rubber tube, which supports the same and constitutes a universal joint; but evidently there are many devices which can be used to mount the reproducer, so that it is free to follow the sound record or phonogram, and which, therefore, would be within the spirit of the invention. The reproducing-style, mounted as just explained, is specially adapted for use in connection with a record in the form of a groove with sloping walls, and this

combination is specially claimed; but it may also be usefully employed in connection with other forms of record.

The invention consists, fifthly, in reproducing directly from the wax record. It is found that such a record has sufficient strength to withstand the rubbing action of the reproducing-style, so that a considerable number of reproductions can be obtained from it. The smoothness of the wax gives it a great advantage in this regard. So far as we are aware, no one has reproduced sounds from a wax record by rubbing a style or reproducer over it.

The invention consists, sixthly, in a reproducer or reproducing instrument in which the reproducing-style, instead of being placed behind its support, projects at the point beyond the edge thereof. One practical advantage of this is that it enables the position of the style on the record or phonogram readily to be observed.

The invention consists, seventhly, in cutting the sound-record in a fusible material, (the waxy compound before referred to, for example,) and then melting the surface slightly, so as to remove any roughness left by the cutting-style. These roughnesses are altogether outside of the sound-vibrations, and give rise in reproducing to scraping noises, which interfere with the intelligibility of the sounds reproduced. These scraping noises are greater with some other modes of reproducing which we have devised, and which will form the subject of other patents, than they are with a rubbing style; but even with the latter the additional smoothness given to the surface by the partial fusion has some advantage.

The invention consists, eighthly, in a sound-recorder having a cutting or graving style which is held by elastic or yielding pressure against the surface on which the record is to be made. The object is to enable the vibratory graver or cutting style to ride over instead of plowing through any elevations on the recording-surface. The depth to which the point of the cutting-style is embedded in the record affects the amplitude of the style's vibration. By this improvement the depth is kept uniform, notwithstanding any slight unevenness of the recording-surface.

The invention consists, ninthly, in having the recorder, of whatever description, or the reproducer, or both, rest against the tablet or recording material by gravity.

The invention consists, tenthly, in combining, with a sound-recorder or recording-instrument of any suitable description, and specially with one having a cutting-style, a tube or hollow standard on which the recorder is mounted, and through which the sound-waves are conveyed to the same. This part of the invention also consists in supporting this hollow standard on a hinge, and having a sound-hollow sound-conveying standard, the same as explained with respect to the recorder, and in similarly connecting the hollow standard of the reproducer with an exterior sound-conveying tube.

The invention consists, eleventhly, in combining with the recorder a mouth-piece so shaped as to include the nose of the user. It is found desirable to concentrate the sound-waves as much as possible upon the recording instrument or style, and if an ordinary mouth-piece be used the sound reproduced from the record is imperfect in the nasal elements, and sounds somewhat like the speech of a person with a cold in his head. By the use of the improved mouth-piece this disagreeable quality of the reproduced sound is avoided.

The invention consists, twelfthly, in a reproducer in which the sonorous vibrations impressed by the record upon the style are by the latter communicated to a block, plate, or other body of hard rubber, and through said body are transmitted to the air or to other vibratory medium. It is found that this material (hard rubber) gives much purer sounds than metal and other substances heretofore employed. It appears to absorb minute vibrations which give rise to scratching noises, and also to communicate sonorous vibrations without at the same time adding any foreign vibrations due to the movements of its own particles among themselves. The result is probably due to the high elasticity and the homogeneity of hard rubber.

The invention consists, thirteenthly, in combining with the disk of a recording and reproducing apparatus, in which the record is formed on the face of said disk in a volute or spiral by cutting or otherwise by any known or suitable means mechanism for giving to said disk a uniform surface-speed under the recorder. Heretofore when the record was formed on the face of a disk the latter has been given a uniform rotation, so that the same number of words were recorded in the outermost circles, as in the smaller inner ones. By giving to the disk a uniform surface-speed under the recorder, or by making the times of each rotation inversely proportional to the distance of the recorder from the center of the disk, the record of any given word or sound will be of the same length at whatever part of the disk it may be, and in this way it is possible considerably to increase the number of words or sounds on a given area.

The invention further comprises certain special constructions, combinations, and arrangements of parts, as hereinafter set forth.

Having now explained the principle of the invention, the manner in which the same is or may be applied will now be explained with reference to the accompanying drawings, which make part of this specification.

the same; Fig. 4, a view in section and elevation of the recorder; Figs. 5 and 6, views on an enlarged scale of the graver or cutting style; Figs. 7 and 8, views in elevation and section, respectively, of the reproducer; Figs. 9 and 10, similar views of another form of reproducer, and Fig. 11 an elevation of the sound-conveying tube for use with the reproducer. Figs. 12 to 17 represent a modified form of apparatus, Fig. 12 being a back view, partly in section; Fig. 13, a plan, partly in section; Fig. 14, an edge view, partly in section; Figs. 15 and 16, views in elevation and section of the recorder, and Fig. 17 an edge view of a friction-clamp making part of the apparatus. Figs. 18 and 19 are plan and longitudinal sections, respectively, of a form of apparatus also constructed in accordance with the invention, or with parts thereof in which the record is made on a strip, and Fig. 20 a plan, partly in section, of the reproducer for use with such apparatus. Fig. 21 is a view of a recorder in which the style is operated electrically.

Referring to Figs. 1 to 11, A is the base or bed of the apparatus, and B an upright frame, which carries the mechanism for supporting and moving the tablet F, (shown as a disk,) on which the record is to be or has been formed. In the slide C, movable in ways of the frame B, is journaled an arbor, D, on which are fixed a metal disk, E, at one end and a bevel-gear, 1, at the other. The arbor projects beyond the metal disk E, so as to form a support for the recording-tablet F, which is retained thereon by the nut 2 and washer 3. The metal disk E performs the double function of a friction-wheel and of a backing to the recording-tablet F. The bevel-gear 1 engages a similar gear, 4, on the end of the screw 5, which is journaled in a bearing in the slide C, and is tapped through a stationary lug, 6, on the frame B. As the arbor D is revolved, the screw 5 is turned also, and in consequence of its engagement with the lug 6 it moves the slide C lengthwise of the frame B. The rotation is communicated to the arbor from the shaft 7, journaled in bearings of the frame B, and provided at one end with a fly-wheel, 8, and crank-handle 9, and at the other with a friction-pinion, G. This pinion is formed, as shown, of rubber disks clamped together between metal washers. It bears against the back of metal disk E, and communicates motion to it. As the slide C is moved by the action of the screw 5, the metal disk E is carried past the friction-pinion, so that it touches the metal disk in a spiral line, and serves to give a uniform surface-speed to each part of the disk as it in turn comes opposite said pinion. The recorder H is placed on the opposite side of the metal disk E, preferably as shown, with the point of the graver or cutting style 11 directly opposite the point where the pinion G touches the disk E. The said pinion

wire by turning the end conical and rounding the extremity, and then grinding off one side to the axis of the wire. This leaves sharp cutting-edges on both sides of the tapering point. These edges remove the material in chips or shavings, like a plane or turning-tool. It is not essential to give this form to the style. Any form which will remove the material and not simply displace it will answer. The style is set in one end of a block, 12, provided on the opposite end with a cup, 13, (see Fig. 4,) and secured in the cross-piece 14 by the nut 15. The cross-piece 14 is fastened to a ring, 16, into which a back plate, 17, is secured. These parts, except the steel style, are preferably of hard rubber, although they could be made of another material—of brass, for example. A sound-conveying tube, 18, is screwed into the back plate, 17, the end being just behind the cup 13. A diaphragm, 105, of any suitable material, whose edges are clamped between the ring 16 and back plate, 17, is placed behind the cup 13, which is pressed against said diaphragm by the elasticity of cross-piece 14. The cup 13 and block 12 serve to communicate the vibrations from the diaphragm to the recording-style.

The tube 18 forms part of a hollow standard, upon which the recorder is mounted. The lower part, 19, of this standard is hinged in the bracket 20, as clearly shown in Fig. 2, so that it can be rocked to bring the recorder into or put it out of action.

On the tube or standard 19 is a ring-weight, Z, which is retained in position by a set-screw, 127. It therefore can be adjusted up or down, in order to increase or diminish the pressure of the style 11 against the tablet F. The use of this weight is desirable, but not necessary.

The tube 21 communicates with the interior of the hollow standard through the hinge, and does not therefore interfere with its freedom of motion. This tube 21 can be fixed in the bracket or can be allowed to turn, as may be preferred.

The mouth-piece I is shaped to fit the face of the user, and is provided with a notch, 22, to receive the nose. It is attached to the tube 23, which at its lower end fits snugly in the tube 21 and communicates through the series of tubes 23, 21, 19, and 18 with the space inside and back of the cup 13.

In operation the recorder rests by its own weight, assisted by the pressure of weight Z, or by its own weight alone, if preferred, against the recording-tablet F, said weight causing the style to embed itself to the proper extent in the recording material. The sonorous vibrations impressed upon the style are so rapid, as well as so minute, that the record is made as perfectly as if the recorder were held positively, while at the same time the recorder can be moved bodily to conform to the unevenness of the surface of the tablet, and thus [illegible]

combination is specially claimed; but it may also be usefully employed in connection with other forms of record.

The invention consists, fifthly, in reproducing directly from the wax record. It is found that such a record has sufficient strength to withstand the rubbing action of the reproducing-style, so that a considerable number of reproductions can be obtained from it. The smoothness of the wax gives it a great advantage in this regard. So far as we are aware, no one has reproduced sounds from a wax record by rubbing a style or reproducer over it.

The invention consists, sixthly, in a reproducer or reproducing instrument in which the reproducing-style, instead of being placed behind its support, projects at the point beyond the edge thereof. One practical advantage of this is that it enables the position of the style on the record or phonogram readily to be observed.

The invention consists, seventhly, in cutting the sound-record in a fusible material, (the waxy compound before referred to, for example,) and then melting the surface slightly, so as to remove any roughness left by the cutting-style. These roughnesses are altogether outside of the sound-vibrations, and give rise in reproducing to scraping noises, which interfere with the intelligibility of the sounds reproduced. These scraping noises are greater with some other modes of reproducing which we have devised, and which will form the subject of other patents, than they are with a rubbing style; but even with the latter the additional smoothness given to the surface by the partial fusion has some advantage.

The invention consists, eighthly, in a sound-recorder having a cutting or graving style which is held by elastic or yielding pressure against the surface on which the record is to be made. The object is to enable the vibratory graver or cutting style to ride over instead of plowing through any elevations on the recording-surface. The depth to which the point of the cutting-style is embedded in the record affects the amplitude of the style's vibration. By this improvement the depth is kept uniform, notwithstanding any slight unevenness of the recording-surface.

The invention consists, ninthly, in having the recorder, of whatever description, or the reproducer, or both, rest against the tablet or recording material by gravity.

The invention consists, tenthly, in combining, with a sound-recorder or recording-instrument of any suitable description, and specially with one having a cutting-style, a tube or hollow standard on which the recorder is mounted, and through which the sound-waves are conveyed to the same. This part of the invention also consists in supporting this hollow standard on a hinge, and having a sound-conveying tube communicate with the interior thereof through the hinge. This part of the invention further consists in supporting the reproducer or reproducing-instrument on a hollow sound-conveying standard, the same as explained with respect to the recorder, and in similarly connecting the hollow standard of the reproducer with an exterior sound-conveying tube.

The invention consists, eleventhly, in combining with the recorder a mouth-piece so shaped as to include the nose of the user. It is found desirable to concentrate the sound-waves as much as possible upon the recording instrument or style, and if an ordinary mouth-piece be used the sound reproduced from the record is imperfect in the nasal elements, and sounds somewhat like the speech of a person with a cold in his head. By the use of the improved mouth-piece this disagreeable quality of the reproduced sound is avoided.

The invention consists, twelfthly, in a reproducer in which the sonorous vibrations impressed by the record upon the style are by the latter communicated to a block, plate, or other body of hard rubber, and through said body are transmitted to the air or to other vibratory medium. It is found that this material (hard rubber) gives much purer sounds than metal and other substances heretofore employed. It appears to absorb minute vibrations which give rise to scratching noises, and also to communicate sonorous vibrations without at the same time adding any foreign vibrations due to the movements of its own particles among themselves. The result is probably due to the high elasticity and the homogeneity of hard rubber.

The invention consists, thirteenthly, in combining with the disk of a recording and reproducing apparatus, in which the record is formed on the face of said disk in a volute or spiral by cutting or otherwise by any known or suitable means mechanism for giving to said disk a uniform surface-speed under the recorder. Heretofore when the record was formed on the face of a disk the latter has been given a uniform rotation, so that the same number of words were recorded in the outermost circles, as in the smaller inner ones. By giving to the disk a uniform surface-speed under the recorder, or by making the times of each rotation inversely proportional to the distance of the recorder from the center of the disk, the record of any given word or sound will be of the same length at whatever part of the disk it may be, and in this way it is possible considerably to increase the number of words or sounds on a given area.

The invention further comprises certain special constructions, combinations, and arrangements of parts, as hereinafter set forth.

Having now explained the principle of the invention, the manner in which the same is or may be applied will now be explained with reference to the accompanying drawings, which make part of this specification.

Figure 1 is a plan view of an apparatus constructed in accordance with the invention, arranged for recording; Figs. 2 and 3, respectively, a front elevation and cross-section of

enlarged scale of the graver or cutting style; Figs. 7 and 8, views in elevation and section, respectively, of the reproducer; Figs. 9 and 10, similar views of another form of reproducer, and Fig. 11 an elevation of the sound-conveying tube for use with the reproducer. Figs. 12 to 17 represent a modified form of apparatus, Fig. 12 being a back view, partly in section; Fig. 13, a plan, partly in section; Fig. 14, an edge view, partly in section; Figs. 15 and 16, views in elevation and section of the recorder, and Fig. 17 an edge view of a friction-clamp making part of the apparatus. Figs. 18 and 19 are plan and longitudinal sections, respectively, of a form of apparatus also constructed in accordance with the invention, or with parts thereof in which the record is made on a strip, and Fig. 20 a plan, partly in section, of the reproducer for use with such apparatus. Fig. 21 is a view of a recorder in which the style is operated electrically.

Referring to Figs. 1 to 11, A is the base or bed of the apparatus, and B an upright frame, which carries the mechanism for supporting and moving the tablet F, (shown as a disk,) on which the record is to be or has been formed. In the slide C, movable in ways of the frame B, is journaled an arbor, D, on which are fixed a metal disk, E, at one end and a bevel-gear, 1, at the other. The arbor projects beyond the metal disk E, so as to form a support for the recording-tablet F, which is retained thereon by the nut 2 and washer 3. The metal disk E performs the double function of a friction-wheel and of a backing to the recording-tablet F. The bevel-gear 1 engages a similar gear, 4, on the end of the screw 5, which is journaled in a bearing in the slide C, and is tapped through a stationary lug, 6, on the frame B. As the arbor D is revolved, the screw 5 is turned also, and in consequence of its engagement with the lug 6 it moves the slide C lengthwise of the frame B. The rotation is communicated to the arbor from the shaft 7, journaled in bearings of the frame B, and provided at one end with a fly-wheel, 8, and crank-handle 9, and at the other with a friction-pinion, G. This pinion is formed, as shown, of rubber disks clamped together between metal washers. It bears against the back of metal disk E, and communicates motion to it. As the slide C is moved by the action of the screw 5, the metal disk E is carried past the friction-pinion, so that it touches the metal disk in a spiral line, and serves to give a uniform surface-speed to each part of the disk as it in turn comes opposite said pinion. The recorder H is placed on the opposite side of the metal disk E, preferably as shown, with the point of the graver or cutting style 11 directly opposite the point where the pinion G touches the disk E. The said pinion thus acts as a support to the disk against the action of the cutting or recording style. The latter is preferably formed of a round the extremity, and then grinding off one side to the axis of the wire. This leaves sharp cutting-edges on both sides of the tapering point. These edges remove the material in chips or shavings, like a plane or turning-tool. It is not essential to give this form to the style. Any form which will remove the material and not simply displace it will answer. The style is set in one end of a block, 12, provided on the opposite end with a cup, 13, (see Fig. 4,) and secured in the cross-piece 14 by the nut 15. The cross-piece 14 is fastened to a ring, 16, into which a back plate, 17, is secured. These parts, except the steel style, are preferably of hard rubber, although they could be made of another material—of brass, for example. A sound-conveying tube, 18, is screwed into the back plate, 17, the end being just behind the cup 13. A diaphragm, 105, of any suitable material, whose edges are clamped between the ring 16 and back plate, 17, is placed behind the cup 13, which is pressed against said diaphragm by the elasticity of cross-piece 14. The cup 13 and block 12 serve to communicate the vibrations from the diaphragm to the recording-style.

The tube 18 forms part of a hollow standard, upon which the recorder is mounted. The lower part, 19, of this standard is hinged in the bracket 20, as clearly shown in Fig. 2, so that it can be rocked to bring the recorder into or put it out of action.

On the tube or standard 19 is a ring-weight, Z, which is retained in position by a set-screw, 127. It therefore can be adjusted up or down, in order to increase or diminish the pressure of the style 11 against the tablet F. The use of this weight is desirable, but not necessary.

The tube 21 communicates with the interior of the hollow standard through the hinge, and does not therefore interfere with its freedom of motion. This tube 21 can be fixed in the bracket or can be allowed to turn, as may be preferred.

The mouth-piece I is shaped to fit the face of the user, and is provided with a notch, 22, to receive the nose. It is attached to the tube 23, which at its lower end fits snugly in the tube 21 and communicates through the series of tubes 23, 21, 19, and 18 with the space inside and back of the cup 13.

In operation the recorder rests by its own weight, assisted by the pressure of weight Z, or by its own weight alone, if preferred, against the recording-tablet F, said weight causing the style to embed itself to the proper extent in the recording material. The sonorous vibrations impressed upon the style are so rapid, as well as so minute, that the record is made as perfectly as if the recorder were held positively, while at the same time the recorder can be moved bodily to conform to the unevenness of the surface of the tablet, and thus keep uniform the depth at which the style operates.

The tablet F consists of a paper or pasteboard foundation, 24, with a coating, 25, of

wax. A composition excellently adapted to the purpose, and according to our experience the best, consists of one part, by weight, of white beeswax and two parts of paraffine. The two bodies are melted together, and if not perfectly free from dirt and grit should be filtered. A filtration through cotton-wool will answer. The coating is or may be about one-twentieth of an inch in thickness, (the paper being one-tenth of an inch, more or less,) and can be made by flowing the melted composition over the paper disk or foundation. The surface is preferably turned off flat on a lathe.

In order to place the tablet in the machine, the recorder H is turned back out of the way. When the tablet has been secured in place, the recorder is turned forward into the position shown, the style resting against and slightly penetrating the wax coating. A penetration of one one-hundredth of an inch has been found very effective, the style being formed of No. 16 wire-shaped at the cutting end as in Figs. 5 and 6. Upon turning the fly-wheel 8 the disk E and tablet F will be turned, and the style 11 will cut or engrave a spiral line in the wax coating of the tablet. If one talks into the mouth-piece I, the style will be thrown into vibrations corresponding to the spoken words, and the engraved line will be of varying character, the inequalities or variations from uniformity representing the forms of the sound-waves.

The reproducer K, (shown in Figs. 7 and 8,) for reproducing from the engraved tablet, or from other suitable record the sounds which formed said records, has a reproducing-style, 26, formed of a narrow metal strip bent near the end, as shown in Fig. 8, and pointed, as shown in Fig. 7. This style is held by cementing, riveting, or otherwise, between the strip 27 and the circular plate 28, both preferably of hard rubber. The strip 27 is fastened at the bottom to an offset on the block 29, in which a passage is formed for the sound-waves. This passage terminates just behind the plate 28. There is a fixed disk, 30, of the same size as the movable plate 28. It is cemented or otherwise fastened on the face of the block, and is perforated at the center, in order not to obstruct the opening therein. The plate 28 is close to but not in contact with the disk. The tube 31, fixed at the upper end to the block 29, is joined at the lower end to the tube 33 by a section of soft flexible vulcanized-rubber tubing, 32. For use the tube 33 is slipped into the tube 19 in the manner shown for the tube 18 of the recorder.

The reproducer K when so placed is mounted upon a hollow standard composed of the tubes or tubing 31, 32, 33, and 19, and in consequence of the flexibility of the rubber tubing 32 it is free to follow the record. No special care is necessary to insure its adjustment. There exists always a liability to disarrangement in some part of the machine either in the recorder or the support therefor or the recording-tablet or its support, or if there be no disarrangement it would be difficult to insure that the reproducing-style should touch the record precisely at the proper point if the reproducer be held rigidly. Difficulties on these accounts are avoided by the loose or flexible mounting of the reproducer, the style automatically adjusting itself to the proper place on the record. It will be seen that the reproducer is mounted on a universal joint, so that it can move in any direction. The movement parallel with the face of the tablet would, however, by itself allow the style to follow and adjust itself to the record to a useful extent.

In operation the reproducer K is placed against the record, and on turning the wheel 8 in the same direction and at about the same speed that it was turned in recording, the record will move the style 26 and plate 28, so as to throw the air in the hollow standard into vibrations, and produce sound-waves similar to those which originally acted upon the recording-style to make the record. The reproduced sounds are audible by placing the ear in proximity to the mouth-piece I; but it is preferred to withdraw said mouth-piece, and to connect the flexible tube 34 (see Fig. 11) with the tube 21 and listen at the ear-piece 35. After the record has been cut it will of course be understood that the machine is turned back to the starting-point for reproducing. The surface of the cut record can be rendered more smooth by removing the engraved tablet from the machine and exposing the surface to heat—as, for example, by rotating the tablet-face downward over an alcohol-lamp until the surface begins to glisten. Of course a too long exposure would destroy the record. It is the merest surface action that is required. The record can be used for reproducing without submitting it to this operation and without removing it from the machine. It may, however, be removed, and at any time thereafter replaced on the same or a similar machine, and be made to reproduce the original sounds.

The reproducer K′ (shown in Figs. 9 and 10) has the style 26 attached to the outer of two light plates, 36 and 37, which are attached to a diaphragm, 38, of thin sheet rubber clamped at the edges between the ring 39 and the border of the back plate, 40. The tube 31 is fastened in the back plate.

It will be observed that in both forms of reproducer the style 26 projects beyond the edge or end of the instrument, so that the position of its point on the record can be easily seen.

Referring now to Figs. 12 to 17, A is the bed, B an upright frame, D an arbor, E a metal disk, F the tablet, and G a friction-pin-

2, and 3. The arbor D, instead of being journaled in a slide, is carried by an arm, L, which is supported by and is fixed on the short shaft 50. This shaft is supported on centers 51 and 52, so that the arm L can be rocked. The worm-wheel 53, loosely mounted on the shaft 50, is held stationary by the clamp M, the jaws 54 fitting on either side of the wheel, and being pressed against it by the thumb-screw 55. The arbor D carries a screw-wheel, 56, which engages the worm-pinion 57 at the upper end of shaft 58. The screw 59 at the lower end of the shaft engages the worm-wheel 53. This shaft 58 and the gears 57 and 59 carried thereby prevent the arm L being turned independently of the worm-wheel 53, except as the said shaft is rotated. As the arbor D, disk E, and tablet F are rotated, the screw 56 turns the shaft 58, and consequently—the worm-wheel 53 being held stationary by the clamp M—the arm L is swung gradually to one side, so that the recorder engraves a spiral line on the wax face of the tablet. When the record has been cut, it is only necessary, in order to restore the tablet to the starting-point for reproducing, to draw back the recorder and to loosen clamp M, when arm L can be moved at once to the proper position.

A recorder constructed and mounted precisely as in Figs. 1, 2, 3, and 4 could be used in this machine; but, as shown, the recording-instrument H′ is modified to some extent. The cutting-style 11 (which is the same as that of Figs. 4 to 6) is set into a block, 60, carried by a metal strip, 61. This is fastened to a block, 62, at the lower end of a back piece, 63, which is attached to the upper end of the tube 64, which forms the hollow standard for the recorder, and which is mounted on the bracket 65, so as to be capable of being turned to put the record into or out of action. The sound-conveying tube 66 corresponding to tube 21 of Figs. 1 and 2 communicates through the hinge with the interior of the tube 64. In front of the opening at the upper end of tube 64 is stretched a diaphragm, 67, of thin sheet metal, or it may be of other membrane or material, its edges being clamped between the ring 68 and back piece, 63, soft-rubber rings 69 and 70 being interposed one on each side of the diaphragm. On the opposite side of the diaphragm 67 from the tube 64 a light plate, 71, of metal cupped in the center, is held against the diaphragm by the pressure of the strip 61, a projection on the back of said strip bearing against the said plate 71.

In this machine the reproducer K, instead of being mounted on the same bracket as the recorder when the latter has been removed, is carried by a separate bracket, 72, the tube 33 being hinged thereto, so that the recorder and reproducer remain, or may remain, always attached to the machine, it only being necessary

bed, B an upright frame, 7 the driving-shaft, 8 the fly-wheel, 9 the operating-crank handle, and G the friction-pinion, as in Figs. 1 and 2. The arbor P is supported in an upright position in bearings of the frame A B, and is revolved by the friction-pinion G engaging the friction-disk Q. The record is made on a wax-coated strip, R, of paper, which is passed around the periphery of the disk S in the groove formed thereon. As the strip passes in front of the recorder or reproducer, it is wound off one reel—say the reel T—and upon the other reel, U. The strip can be wound back upon the reel T when desired. Each reel rests by its own weight upon a platform or flange, 75, at the upper end of a hollow shaft, 76, which turns upon a stud, 77, fastened at the base to the bed B. A pin, 78, passes through the center of the reel, and forms a journal for it to turn upon. A nut, 79, holds the reel on, and may be used to bind it with more or less tension. On each shaft 76 is a belt-pulley, 80 and 81, respectively, driven by a crossed belt, 82 or 83, from a pulley, 84 and 85, on the arbor P. These pulleys 84 and 85 are loose upon the arbor, but are provided each with a clutch, 86 and 87, so placed (see Fig. 18) that when the arbor is turned to the left the clutch 87 engages the hub 89 on the arbor, and the pulley 85 is turned therewith, while when turned to the right the clutch 86 engages the hub 88. Each shaft 76 has a stop-clutch, 90 and 91, respectively, which holds it stationary when the strip is being wound on the other reel. Thus, when the arbor P is turned to the left the reel U is revolved in the direction indicated by the arrow, and the sleeve-supporting reel T is held stationary. The strip is thus stretched at all times, the degree of tension depending upon the friction between the reels and their supporting-flanges 75. The recorder H″ is carried by a cross-piece, 92, supported by posts 93. The style 11 is carried by a cross-piece, 94, to which it is attached by means of the cup 95, of hard rubber, which forms a nut on the screw-threaded shank of the style, and said cup rests against a mica diaphragm, 96, whose edges are clamped between the screw-ring 97 and the back plate, 98. The tube 18, screwed into the back plate, is fastened by soldering or otherwise to the cross-piece 92. The tube 23 of the mouth-piece I fits into said tube 18. The ends of the cross-piece 92 are slotted to fit around the screws at the top of posts 93 and rest upon nuts 99, and are clamped by nuts 100. By means of these nuts the vertical position of the recorder can be adjusted. After one line has been engraved on the strip, the recorder can be adjusted to engrave as many additional lines parallel thereto as the strip will receive. The slots in the cross-piece 92 allow the recorder to be moved toward and

wax. A composition excellently adapted to the purpose, and according to our experience the best, consists of one part, by weight, of white beeswax and two parts of paraffine. The two bodies are melted together, and if not perfectly free from dirt and grit should be filtered. A filtration through cotton-wool will answer. The coating is or may be about one-twentieth of an inch in thickness, (the paper being one-tenth of an inch, more or less,) and can be made by flowing the melted composition over the paper disk or foundation. The surface is preferably turned off flat on a lathe.

In order to place the tablet in the machine, the recorder H is turned back out of the way. When the tablet has been secured in place, the recorder is turned forward into the position shown, the style resting against and slightly penetrating the wax coating. A penetration of one one-hundredth of an inch has been found very effective, the style being formed of No. 16 wire-shaped at the cutting end as in Figs. 5 and 6. Upon turning the fly-wheel 8 the disk E and tablet F will be turned, and the style 11 will cut or engrave a spiral line in the wax coating of the tablet. If one talks into the mouth-piece I, the style will be thrown into vibrations corresponding to the spoken words, and the engraved line will be of varying character, the inequalities or variations from uniformity representing the forms of the sound-waves.

The reproducer K, (shown in Figs. 7 and 8,) for reproducing from the engraved tablet, or from other suitable record the sounds which formed said records, has a reproducing-style, 26, formed of a narrow metal strip bent near the end, as shown in Fig. 8, and pointed, as shown in Fig. 7. This style is held by cementing, riveting, or otherwise, between the strip 27 and the circular plate 28, both preferably of hard rubber. The strip 27 is fastened at the bottom to an offset on the block 29, in which a passage is formed for the sound-waves. This passage terminates just behind the plate 28. There is a fixed disk, 30, of the same size as the movable plate 28. It is cemented or otherwise fastented on the face of the block, and is perforated at the center, in order not to obstruct the opening therein. The plate 28 is close to but not in contact with the disk. The tube 31, fixed at the upper end to the block 29, is joined at the lower end to the tube 33 by a section of soft flexible vulcanized-rubber tubing, 32. For use the tube 33 is slipped into the tube 19 in the manner shown for the tube 18 of the recorder.

The reproducer K when so placed is mounted upon a hollow standard composed of the tubes or tubing 31, 32, 33, and 19, and in consequence of the flexibility of the rubber tubing 32 it is free to follow the record. No special care is necessary to insure its adjustment, for if the reproducer K be allowed to rest against the record with the style upon the engraved line the style will of itself gravitate to the bottom of the groove.

There exists always a liability to disarrangement in some part of the machine either in the recorder or the support therefor or the recording-tablet or its support, or if there be no disarragement it would be difficult to insure that the reproducing-style should touch the record precisely at the proper point if the reproducer be held rigidly. Difficulties on these accounts are avoided by the loose or flexible mounting of the reproducer, the style automatically adjusting itself to the proper place on the record. It will be seen that the reproducer is mounted on a universal joint, so that it can move in any direction. The movement parallel with the face of the tablet would, however, by itself allow the style to follow and adjust itself to the record to a useful extent.

In operation the reproducer K is placed against the record, and on turning the wheel 8 in the same direction and at about the same speed that it was turned in recording, the record will move the style 26 and plate 28, so as to throw the air in the hollow standard into vibrations, and produce sound-waves similar to those which originally acted upon the recording-style to make the record. The reproduced sounds are audible by placing the ear in proximity to the mouth-piece I; but it is preferred to withdraw said mouth-piece, and to connect the flexible tube 34 (see Fig. 11) with the tube 21 and listen at the ear-piece 35. After the record has been cut it will of course be understood that the machine is turned back to the starting-point for reproducing. The surface of the cut record can be rendered more smooth by removing the engraved tablet from the machine and exposing the surface to heat—as, for example, by rotating the tablet-face downward over an alcohol-lamp until the surface begins to glisten. Of course a too long exposure would destroy the record. It is the merest surface action that is required. The record can be used for reproducing without submitting it to this operation and without removing it from the machine. It may, however, be removed, and at any time thereafter replaced on the same or a similar machine, and be made to reproduce the original sounds.

The reproducer K′ (shown in Figs. 9 and 10) has the style 26 attached to the outer of two light plates, 36 and 37, which are attached to a diaphragm, 38, of thin sheet rubber clamped at the edges between the ring 39 and the border of the back plate, 40. The tube 31 is fastened in the back plate.

It will be observed that in both forms of reproducer the style 26 projects beyond the edge or end of the instrument, so that the position of its point on the record can be easily seen.

Referring now to Figs. 12 to 17, A is the bed, B an upright frame, D an arbor, E a metal disk, F the tablet, and G a friction-pinion, as in Figs. 1 to 11. The nut 2 and washer 3, the shaft 7, wheel 8, and crank 9, and the paper disk 24 and wax coating 25 are identical with the parts similarly numbered in Figs. 1,

2, and 3. The arbor D, instead of being journaled in a slide, is carried by an arm, L, which is supported by and is fixed on the short shaft 50. This shaft is supported on centers 51 and 52, so that the arm L can be rocked. The worm-wheel 53, loosely mounted on the shaft 50, is held stationary by the clamp M, the jaws 54 fitting on either side of the wheel, and being pressed against it by the thumb-screw 55. The arbor D carries a screw-wheel, 56, which engages the worm-pinion 57 at the upper end of shaft 58. The screw 59 at the lower end of the shaft engages the worm-wheel 53. This shaft 58 and the gears 57 and 59 carried thereby prevent the arm L being turned independently of the worm-wheel 53, except as the said shaft is rotated. As the arbor D, disk E, and tablet F are rotated, the screw 56 turns the shaft 58, and consequently—the worm-wheel 53 being held stationary by the clamp M—the arm L is swung gradually to one side, so that the recorder engraves a spiral line on the wax face of the tablet. When the record has been cut, it is only necessary, in order to restore the tablet to the starting-point for reproducing, to draw back the recorder and to loosen clamp M, when arm L can be moved at once to the proper position.

A recorder constructed and mounted precisely as in Figs. 1, 2, 3, and 4 could be used in this machine; but, as shown, the recording-instrument H′ is modified to some extent. The cutting-style 11 (which is the same as that of Figs. 4 to 6) is set into a block, 60, carried by a metal strip, 61. This is fastened to a block, 62, at the lower end of a back piece, 63, which is attached to the upper end of the tube 64, which forms the hollow standard for the recorder, and which is mounted on the bracket 65, so as to be capable of being turned to put the record into or out of action. The sound-conveying tube 66 corresponding to tube 21 of Figs. 1 and 2 communicates through the hinge with the interior of the tube 64. In front of the opening at the upper end of tube 64 is stretched a diaphragm, 67, of thin sheet metal, or it may be of other membrane or material, its edges being clamped between the ring 68 and back piece, 63, soft-rubber rings 69 and 70 being interposed one on each side of the diaphragm. On the opposite side of the diaphragm 67 from the tube 64 a light plate, 71, of metal cupped in the center, is held against the diaphragm by the pressure of the strip 61, a projection on the back of said strip bearing against the said plate 71.

In this machine the reproducer K, instead of being mounted on the same bracket as the recorder when the latter has been removed, is carried by a separate bracket, 72, the tube 33 being hinged thereto, so that the recorder and reproducer remain, or may remain, always attached to the machine, it only being necessary to turn one or the other into position, as may be required.

Referring to Figs. 18 to 20, A is the base or bed, B an upright frame, 7 the driving-shaft, 8 the fly-wheel, 9 the operating-crank handle, and G the friction-pinion, as in Figs. 1 and 2. The arbor P is supported in an upright position in bearings of the frame A B, and is revolved by the friction-pinion G engaging the friction-disk Q. The record is made on a wax-coated strip, R, of paper, which is passed around the periphery of the disk S in the groove formed thereon. As the strip passes in front of the recorder or reproducer, it is wound off one reel—say the reel T—and upon the other reel, U. The strip can be wound back upon the reel T when desired. Each reel rests by its own weight upon a platform or flange, 75, at the upper end of a hollow shaft, 76, which turns upon a stud, 77, fastened at the base to the bed B. A pin, 78, passes through the center of the reel, and forms a journal for it to turn upon. A nut, 79, holds the reel on, and may be used to bind it with more or less tension. On each shaft 76 is a belt-pulley, 80 and 81, respectively, driven by a crossed belt, 82 or 83, from a pulley, 84 and 85, on the arbor P. These pulleys 84 and 85 are loose upon the arbor, but are provided each with a clutch, 86 and 87, so placed (see Fig. 18) that when the arbor is turned to the left the clutch 87 engages the hub 89 on the arbor, and the pulley 85 is turned therewith, while when turned to the right the clutch 86 engages the hub 88. Each shaft 76 has a stop-clutch, 90 and 91, respectively, which holds it stationary when the strip is being wound on the other reel. Thus, when the arbor P is turned to the left the reel U is revolved in the direction indicated by the arrow, and the sleeve-supporting reel T is held stationary. The strip is thus stretched at all times, the degree of tension depending upon the friction between the reels and their supporting-flanges 75. The recorder H″ is carried by a cross-piece, 92, supported by posts 93. The style 11 is carried by a cross-piece, 94, to which it is attached by means of the cup 95, of hard rubber, which forms a nut on the screw-threaded shank of the style, and said cup rests against a mica diaphragm, 96, whose edges are clamped between the screw-ring 97 and the back plate, 98. The tube 18, screwed into the back plate, is fastened by soldering or otherwise to the cross-piece 92. The tube 23 of the mouth-piece I fits into said tube 18. The ends of the cross-piece 92 are slotted to fit around the screws at the top of posts 93 and rest upon nuts 99, and are clamped by nuts 100. By means of these nuts the vertical position of the recorder can be adjusted. After one line has been engraved on the strip, the recorder can be adjusted to engrave as many additional lines parallel thereto as the strip will receive. The slots in the cross-piece 92 allow the recorder to be moved toward and away from the strip, so as to regulate the depth of the engraved line. To insure a greater nicety of adjustment, screws 101 are

tapped through the metal at the closed end of the slots, and bear at the point against the supporting-screws.

The reproducer K', Fig. 20, is similar to that shown in Figs. 9 and 10, except that the style 26 is so placed that the point is at the center instead of projecting beyond the edge of the instrument. Its position on the record is therefore not so readily seen; but with the form of machine shown in these figures this is less important. The same may be said of the loose mounting of the reproducer, although in point of fact the thin rubber diaphragm 38 gives a certain lateral play to the style. The tube 31 is rigidly fastened to a cross-piece, 102, identical with the cross-piece 92, and with said tube 31 the bearing-tube 30 and ear-piece 35 are connected.

The paper strip can be easily coated with the beeswax and paraffine compound by running the same through a body of melted composition and scraping one side, leaving what adheres to the other to harden thereon.

In Fig. 21 an arrangement for operating the recorder by electro-magnetism is shown. The magnet 107 is mounted on a bar, 108, journaled in bearings in standards 109. It is provided with a bobbin, 106, of wire, surrounding the pole-piece, which bobbin is included in a circuit over which electrical undulations are caused to pass by any suitable transmitting-instrument—for example, such as commonly employed on telephone-lines. In front of the pole-piece or core of the bobbin is a diaphragm, 105, of magnetic material, whose edges are clamped between the ring 16 and back plate, 17. The cup 13 should always be in contact with diaphragm 105, and is pressed against it by the spring of piece 14. This cup, as well as the style 11, block 12, nut 15, and cross-piece 14, is the same as in the recorder H of Figs. 1 and 4

It is evident that various modifications other than those indicated can be made and the invention still be employed in whole or in part, and also that parts of the invention may be used separately.

In the foregoing description details have been given with some minuteness. This has been done to furnish the best information in our power for enabling those skilled in the art to make and use the invention, and not with the intention of limiting the invention to the precise dimensions, proportions, shapes, and materials stated.

A means has been shown for impressing vibrations upon the recording-style by an electrical current through the intermediary of an electro-magnet, in a manner similar to that in which the diaphragm of an ordinary receiving-telephone has been vibrated.

It is evident that other means heretofore used for vibrating a diaphragm could be used for imparting vibrations, (those of a telephone-diaphragm, for example.)

The term "cutting" is herein employed to indicate an action in which the material is removed in chips, shavings, or other small pieces—as in engraving, turning, and the like—and not simply displaced.

The displacement of the material is not only a different operation from the cutting contemplated by this invention, but is not calculated to accomplish the objects for which cutting or graving is employed.

Having now fully described our said invention and the manner in which the same is or may be carried into effect, what we claim is—

1. The method of forming a record of sounds by impressing sonorous vibrations upon a style, and thereby cutting in a solid body the record corresponding in form to the sound-waves, in contradistinction to the formation of sound-records by indenting a foil with a vibratory style, or cutting a strip by vibrating it against a revolving disk-cutter, substantially as described.

2. The method of forming a sound-record by impressing the sonorous vibrations upon a style in a direction at right angles to the recording-surface, and thereby cutting in a solid body a series of elevations and depressions of varying depth, corresponding in form to the sound-waves, substantially as described.

3. The vibratory cutting-style of a sound-recorder, substantially as described.

4. The cutting-style, in combination with a support permitting the same to be vibrated, and means for impressing sonorous vibrations thereon, substantially as described.

5. A vibratory cutting style, in combination with a sound-conveying tube for concentrating the sound-waves upon the style, substantially as described.

6. A vibratory cutting-style, in combination with a tablet or other solid body in which the record is to be cut, and mechanism for supporting the same and moving it with reference to the said style, substantially as described.

7. A sound-record consisting of a tablet or other solid body having its surface cut or engraved with narrow lines of irregular or varied form corresponding to sound-waves, substantially as described.

8. A sound-record consisting of a tablet or solid body having its surface cut or engraved with a number of lines of variable cross-section, the irregularities or variations corresponding in form to sound-waves, substantially as described.

9. The method of forming a sound or speech record which consists in engraving or cutting the same in wax or a wax-like composition, substantially as described.

10. The sound or speech record cut or engraved in wax or a wax-like composition, substantially as described.

tions the composition of beeswax and paraffine, substantially at described.

12. The sound or speech record cut or engraved in a wax like composition, such as the compound of beeswax and paraffine, substantially as described.

13. A tablet or body for recording sound-vibrations, consisting of a paper or pasteboard foundation and a surface-coating of beeswax and paraffine compound, substantially as described.

14. The sound or speech record cut or engraved in a wax-like composition, such as the described compound of beeswax and paraffine, constituting a surface-coating to a paper or pasteboard foundation, substantially as described.

15. The method of making a sound or speech record which consists in engraving or cutting in the recording material an irregular groove with sloping walls, the shape of the groove representing the sound-vibrations, substantially as described.

16. The method of making a sound or speech record which consists in cutting in the recording material a groove with sloping walls and of variable cross-section, the variations corresponding in form to sound-waves, substantially as described.

17. The sound-record in the form of an irregular groove with sloping walls cut in solid material, substantially as described

18. The sound-record cut in wax or wax-like composition in the form of an irregular groove with sloping walls, substantially as described.

19. The combination, with a reproducing-style, of a mounting therefor, which leaves said style-face to move laterally, and thereby adjust itself automatically to a sound-record, substantially as described.

20. The reproducer loosely mounted on a suitable support, so that the reproducing-style is capable of a lateral movement, and may in consequence thereof adjust itself automatically on the record, substantially as described.

21. The reproducer mounted on a universal joint and held against the record by yielding pressure, substantially as described.

22. The combination, with a grooved tablet or other body having a sound-record formed therein, of a reproducer having a rubbing-style loosely mounted, so that it is free to move laterally, and thus adjust itself to the groove, substantially as described.

23. The combination, with the tablet or other body having the sound record formed therein as an irregular groove with sloping walls, of a reproducer having a style for rubbing over said record and mounted on a universal joint, substantially as described.

beyond the edge or end of the instrument, so that the position of the point of the style on the record may readily be seen, substantially as described.

26. In a reproducer, the combination, with a vibratory plate or diaphragm, of a reproducing-style fastened flatwise on said plate or diaphragm and bent at the end, substantially as described.

27. The method of recording and reproducing sounds by cutting the record in a wax or wax-like material, and then rubbing over the record the style of a suitable reproducing instrument, so as to impress sonorous vibrations on said style, substantially as described.

28. The method of improving a sound-record which consists in producing an incipient fusion of the surface, substantially as described.

29. The improvement in preparing a sound-record, consisting in cutting the record in a fusible material, and then producing an incipient fusion of the surface, substantially as described.

30. The sound-recorder having a vibratory cutting-style held against the recording material by yielding pressure, substantially as described.

31. The recording-instrument having a vibratory cutting-style and mounted on a hinged arm, substantially as described.

32. The combination, with the tablet or body in which the sound-record is to be made, of the recording-instrument mounted on a hinged arm and resting by gravity against the tablet, substantially as described.

33. The recorder mounted on a hollow arm or standard, which constitutes also a sound-conveyer, substantially as described.

34. The recorder mounted upon an arm or standard hinged to its bracket or base, and provided with a sound-conveyer extending lengthwise of said arm, substantially as described.

35. The recorder mounted upon a hinged arm, and combined with a sound-conveyer which extends lengthwise of the arm, and is connected at the hinge with an exterior sound-conveyer, substantially as described.

36. The reproducer mounted upon a hollow standard which forms a sound-conveyer, substantially as described.

37. The reproducer mounted on a hinged arm, and provided with a sound-conveyer extending lengthwise of said arm, substantially as described.

38. The reproducer mounted on a hinged arm, and provided with a sound-conveyer extending lengthwise of said arm, and connected at the hinge with an exterior sound-conveyer, substantially as described.

39. The combination, with a sound-record

the slots, and bear at the point against the supporting-screws.

The reproducer K', Fig. 20, is similar to that shown in Figs. 9 and 10, except that the style 26 is so placed that the point is at the center instead of projecting beyond the edge of the instrument. Its position on the record is therefore not so readily seen; but with the form of machine shown in these figures this is less important. The same may be said of the loose mounting of the reproducer, although in point of fact the thin rubber diaphragm 38 gives a certain lateral play to the style. The tube 31 is rigidly fastened to a cross-piece, 102, identical with the cross-piece 92, and with said tube 31 the bearing-tube 30 and ear-piece 35 are connected.

The paper strip can be easily coated with the beeswax and paraffine compound by running the same through a body of melted composition and scraping one side, leaving what adheres to the other to harden thereon.

In Fig. 21 an arrangement for operating the recorder by electro-magnetism is shown. The magnet 107 is mounted on a bar, 108, journaled in bearings in standards 109. It is provided with a bobbin, 106, of wire, surrounding the pole-piece, which bobbin is included in a circuit over which electrical undulations are caused to pass by any suitable transmitting-instrument—for example, such as commonly employed on telephone-lines. In front of the pole-piece or core of the bobbin is a diaphragm, 105, of magnetic material, whose edges are clamped between the ring 16 and back plate, 17. The cup 13 should always be in contact with diaphragm 105, and is pressed against it by the spring of piece 14. This cup, as well as the style 11, block 12, nut 15, and cross-piece 14, is the same as in the recorder H of Figs. 1 and 4

It is evident that various modifications other than those indicated can be made and the invention still be employed in whole or in part, and also that parts of the invention may be used separately.

In the foregoing description details have been given with some minuteness. This has been done to furnish the best information in our power for enabling those skilled in the art to make and use the invention, and not with the intention of limiting the invention to the precise dimensions, proportions, shapes, and materials stated.

A means has been shown for impressing vibrations upon the recording-style by an electrical current through the intermediary of an electro-magnet, in a manner similar to that in which the diaphragm of an ordinary receiving-telephone has been vibrated.

It is evident that other means heretofore used for vibrating a diaphragm could be used in place of the magnet; also, it is evident that the vibrations of the reproducing-style could be taken up and transmitted by the means heretofore used for taking up and transmitting the vibrations of the recording-diaphragm, for example.)

The term "cutting" is herein employed to indicate an action in which the material is removed in chips, shavings, or other small pieces—as in engraving, turning, and the like—and not simply displaced.

The displacement of the material is not only a different operation from the cutting contemplated by this invention, but is not calculated to accomplish the objects for which cutting or graving is employed.

Having now fully described our said invention and the manner in which the same is or may be carried into effect, what we claim is—

1. The method of forming a record of sounds by impressing sonorous vibrations upon a style, and thereby cutting in a solid body the record corresponding in form to the sound-waves, in contradistinction to the formation of sound-records by indenting a foil with a vibratory style, or cutting a strip by vibrating it against a revolving disk-cutter, substantially as described.

2. The method of forming a sound-record by impressing the sonorous vibrations upon a style in a direction at right angles to the recording-surface, and thereby cutting in a solid body a series of elevations and depressions of varying depth, corresponding in form to the sound-waves, substantially as described.

3. The vibratory cutting-style of a sound-recorder, substantially as described.

4. The cutting-style, in combination with a support permitting the same to be vibrated, and means for impressing sonorous vibrations thereon, substantially as described.

5. A vibratory cutting style, in combination with a sound-conveying tube for concentrating the sound-waves upon the style, substantially as described.

6. A vibratory cutting-style, in combination with a tablet or other solid body in which the record is to be cut, and mechanism for supporting the same and moving it with reference to the said style, substantially as described.

7. A sound-record consisting of a tablet or other solid body having its surface cut or engraved with narrow lines of irregular or varied form corresponding to sound waves, substantially as described.

8. A sound-record consisting of a tablet or solid body having its surface cut or engraved with a number of lines of variable cross-section, the irregularities or variations corresponding in form to sound-waves, substantially as described.

9. The method of forming a sound or speech record which consists in engraving or cutting the same in wax or a wax-like composition, substantially as described.

10. The sound or speech record cut or engraved in wax or a wax-like composition, substantially as described.

11. The recording-tablet of a phonograph or sound-recording machine, having as the material for recording sounds or sonorous vibra-

tions the composition of beeswax and paraffine, substantially at described.

12. The sound or speech record cut or engraved in a wax like composition, such as the compound of beeswax and paraffine, substantially as described.

13. A tablet or body for recording sound-vibrations, consisting of a paper or pasteboard foundation and a surface-coating of beeswax and paraffine compound, substantially as described.

14. The sound or speech record cut or engraved in a wax-like composition, such as the described compound of beeswax and paraffine, constituting a surface-coating to a paper or pasteboard foundation, substantially as described.

15. The method of making a sound or speech record which consists in engraving or cutting in the recording material an irregular groove with sloping walls, the shape of the groove representing the sound-vibrations, substantially as described.

16. The method of making a sound or speech record which consists in cutting in the recording material a groove with sloping walls and of variable cross-section, the variations corresponding in form to sound-waves, substantially as described.

17. The sound-record in the form of an irregular groove with sloping walls cut in solid material, substantially as described

18. The sound-record cut in wax or wax-like composition in the form of an irregular groove with sloping walls, substantially as described.

19. The combination, with a reproducing-style, of a mounting therefor, which leaves said style-face to move laterally, and thereby adjust itself automatically to a sound-record, substantially as described.

20. The reproducer loosely mounted on a suitable support, so that the reproducing-style is capable of a lateral movement, and may in consequence thereof adjust itself automatically on the record, substantially as described.

21. The reproducer mounted on a universal joint and held against the record by yielding pressure, substantially as described.

22. The combination, with a grooved tablet or other body having a sound-record formed therein, of a reproducer having a rubbing-style loosely mounted, so that it is free to move laterally, and thus adjust itself to the groove, substantially as described.

23. The combination, with the tablet or other body having the sound record formed therein as an irregular groove with sloping walls, of a reproducer having a style for rubbing over said record and mounted on a universal joint, substantially as described.

24. The combination, with a sound-record formed in wax or a wax-like material, of a reproducer having a rubbing style for receiving sonorous vibrations from said record, substantially as described.

25. A reproducer having a style projecting beyond the edge or end of the instrument, so that the position of the point of the style on the record may readily be seen, substantially as described.

26. In a reproducer, the combination, with a vibratory plate or diaphragm, of a reproducing-style fastened flatwise on said plate or diaphragm and bent at the end, substantially as described.

27. The method of recording and reproducing sounds by cutting the record in a wax or wax-like material, and then rubbing over the record the style of a suitable reproducing instrument, so as to impress sonorous vibrations on said style, substantially as described.

28. The method of improving a sound-record which consists in producing an incipient fusion of the surface, substantially as described.

29. The improvement in preparing a sound-record, consisting in cutting the record in a fusible material, and then producing an incipient fusion of the surface, substantially as described.

30. The sound-recorder having a vibratory cutting-style held against the recording material by yielding pressure, substantially as described.

31. The recording-instrument having a vibratory cutting-style and mounted on a hinged arm, substantially as described.

32. The combination, with the tablet or body in which the sound-record is to be made, of the recording-instrument mounted on a hinged arm and resting by gravity against the tablet, substantially as described.

33. The recorder mounted on a hollow arm or standard, which constitutes also a sound-conveyer, substantially as described.

34. The recorder mounted upon an arm or standard hinged to its bracket or base, and provided with a sound-conveyer extending lengthwise of said arm, substantially as described.

35. The recorder mounted upon a hinged arm, and combined with a sound-conveyer which extends lengthwise of the arm, and is connected at the hinge with an exterior sound-conveyer, substantially as described.

36. The reproducer mounted upon a hollow standard which forms a sound-conveyer, substantially as described.

37. The reproducer mounted on a hinged arm, and provided with a sound-conveyer extending lengthwise of said arm, substantially as described.

38. The reproducer mounted on a hinged arm, and provided with a sound-conveyer extending lengthwise of said arm, and connected at the hinge with an exterior sound-conveyer, substantially as described.

39. The combination, with a sound-recorder, of a mouth-piece shaped to surround the mouth and nose of the user, and to concentrate the sound upon the recording device, substantially as described.

40. The combination, with the tablet, in the form of a disk, and a recorder or reproducer,

of mechanism for causing a spiral line to be traced on the disk by the recorder or reproducer at a uniform surface-speed, substantially as described.

41. The combination, with the tablet, in the form of a disk, the arbor, and the metal disk operating as a friction-wheel, of the slide, or its equivalent, such as herein shown, in which said arbor is journaled, and the friction-pinion for revolving said disk, substantially as described.

42. The combination, with the recorder or the reproducer, the disk, the arbor, and the laterally-movable support to the arbor, of the friction-pinion placed behind and bearing against the disk at a point opposite the recorder or reproducer, substantially as described.

43. The combination, with a recording-style and the support therefor, of a cup on the back of said support, and the sound-conveying tube terminating just behind the cup, substantially as described.

44. In combination with the style of a sound-reproducer, a vibratory body or plate of hard rubber, upon which vibrations are impressed by said style, and through which they are transmitted, substantially as described.

45. A tablet provided with a wax or wax-like coating, and having engraved in said coating a spiral line with inequalities or irregularities corresponding in form to sound-waves, substantially as described.

46. A tablet provided with a coating of wax or wax-like composition, and having a sound-record engraved in said coating, said engraved coating having the glazed surface which results from an incipient fusion of the wax after cutting or engraving the record, substantially as described.

47. In combination with a sound-recorder, a flaring mouth-piece shaped to fit over the face of the user and to include his nose, and communicating through a tube or contracted opening with the space behind the diaphragm of said recorder, substantially as described.

In testimony whereof we have signed this specification in presence of two subscribing witnesses.

CHICHESTER A. BELL.
SUMNER TAINTER.

Witnesses:
PHILIP MAURO,
C. J. HEDRICK.

780

(No Model.) 5 Sheets—Sheet 1.

S. TAINTER.

APPARATUS FOR RECORDING AND REPRODUCING SOUNDS.

No. 341,288. Patented May 4, 1886.

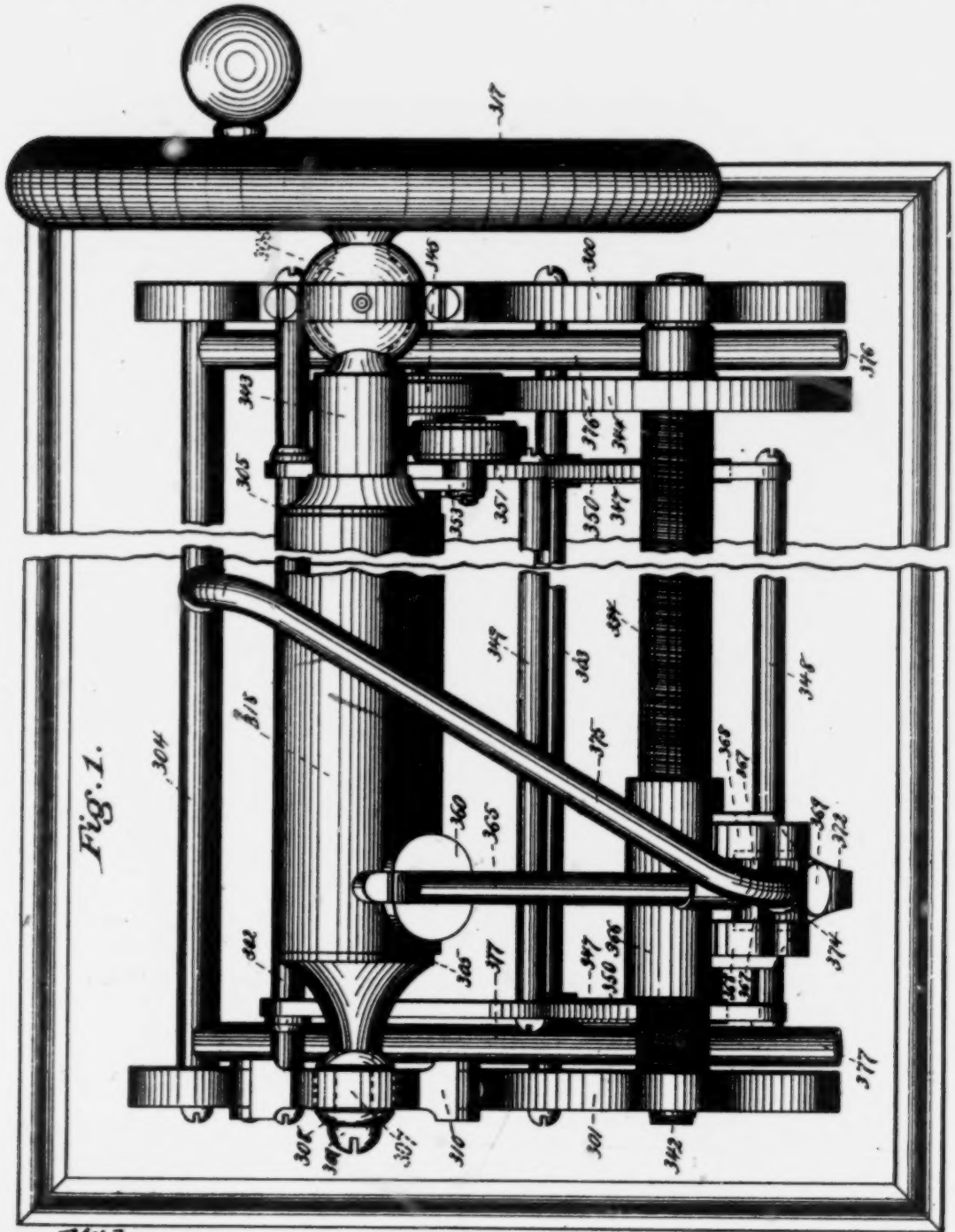

Fig. 1.

Witnesses
W. A. Schumbow.
Philip Mauro.

Inventor
Sumner Tainter by
A. Pollok
his Attorney.

7882

(No Model.) 3 Sheets—Sheet 2.

S. TAINTER.

APPARATUS FOR RECORDING AND REPRODUCING SOUNDS.

No. 341,288. Patented May 4, 1886.

Fig. 1.

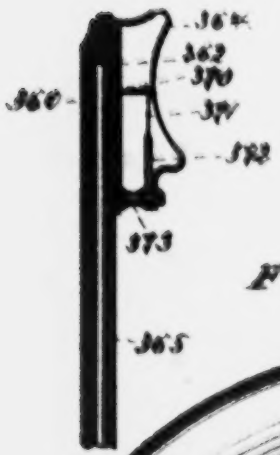

Fig. 2.

Fig. 8.

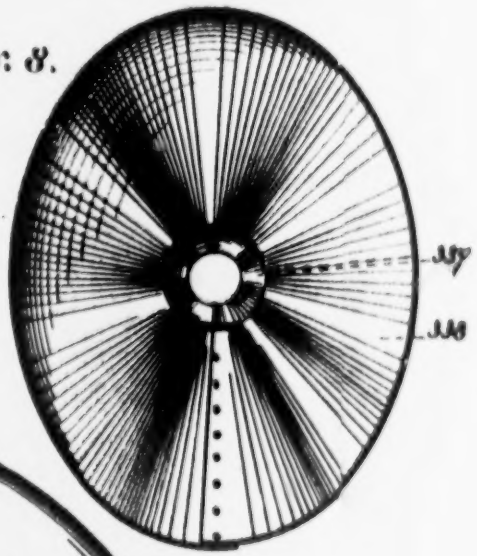

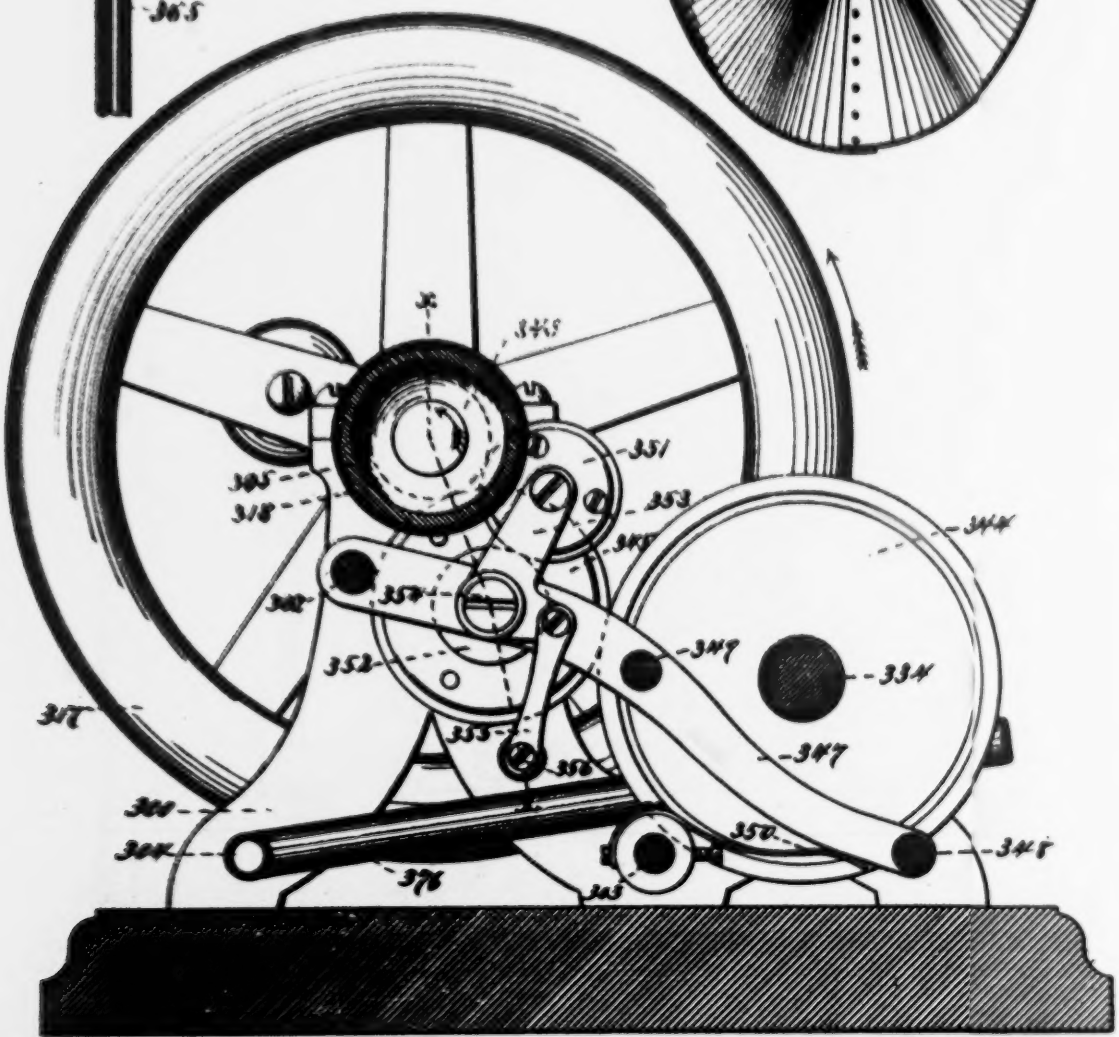

Witnesses

Inventor

(No Model.) 5 Sheets—Sheet 2.

S. TAINTER.

APPARATUS FOR RECORDING AND REPRODUCING SOUNDS.

No. 341,288. Patented May 4, 1886.

Fig. 17.

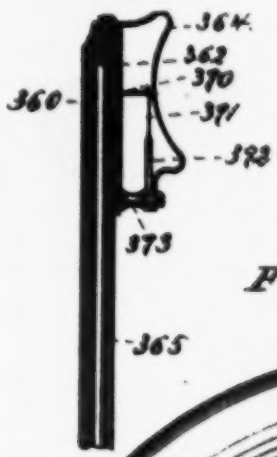

Fig. 2.

Fig. 8.

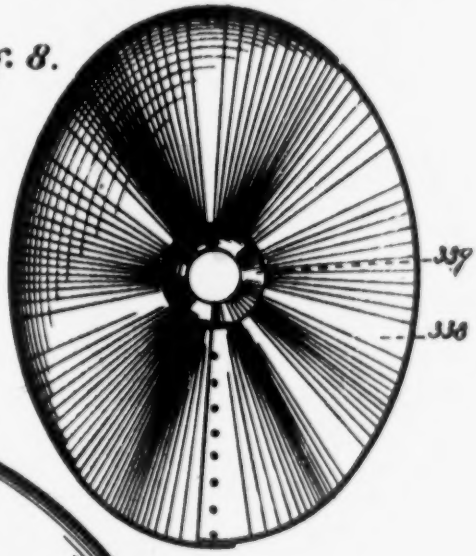

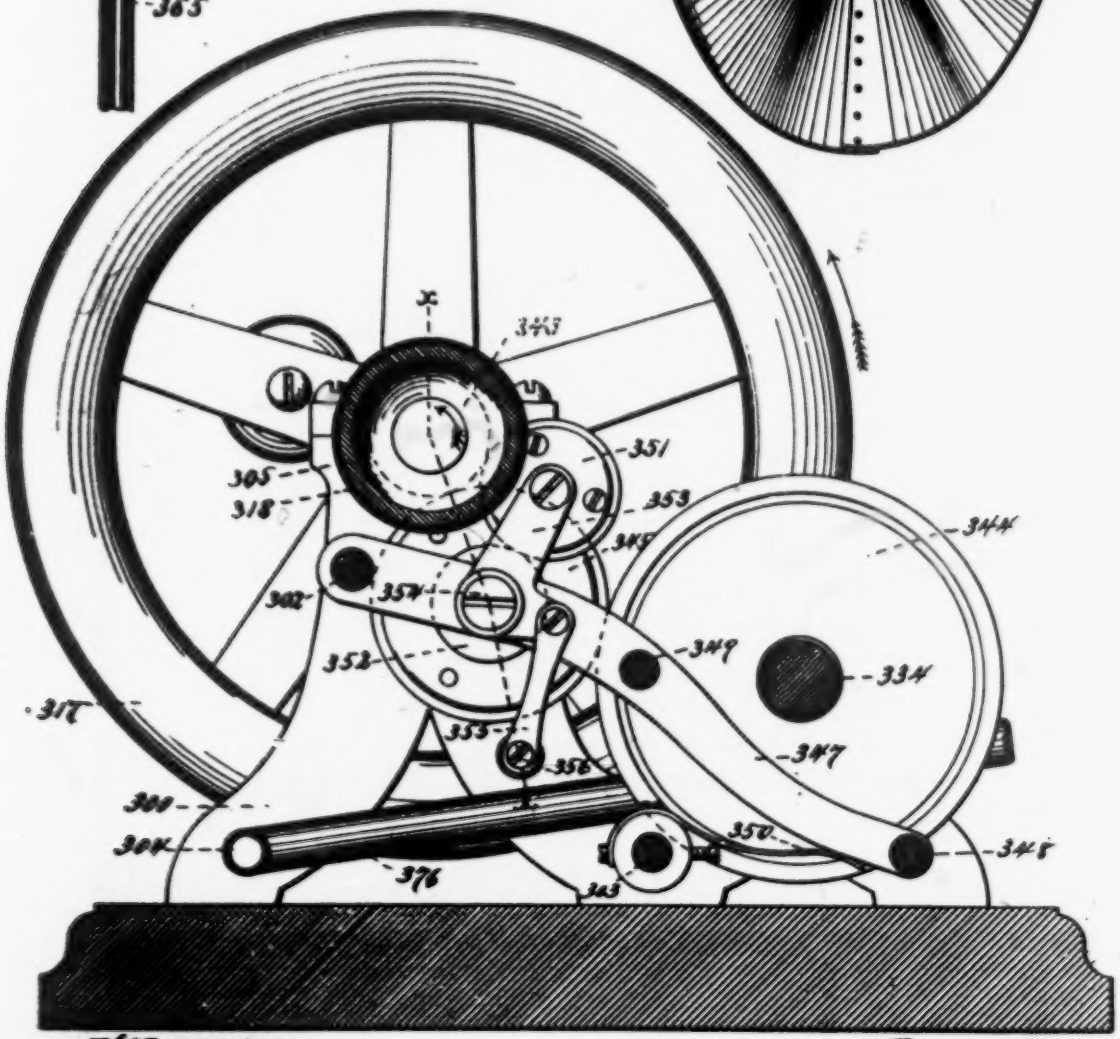

Witnesses
W. A. Schoonmaker
Philip Mauro

Inventor
Sumner Tainter by
A. Pollok his attorney.

784

(No Model.) 5 Sheets—Sheet 3.

S. TAINTER.

APPARATUS FOR RECORDING AND REPRODUCING SOUNDS.

No. 341,288. Patented May 4, 1886.

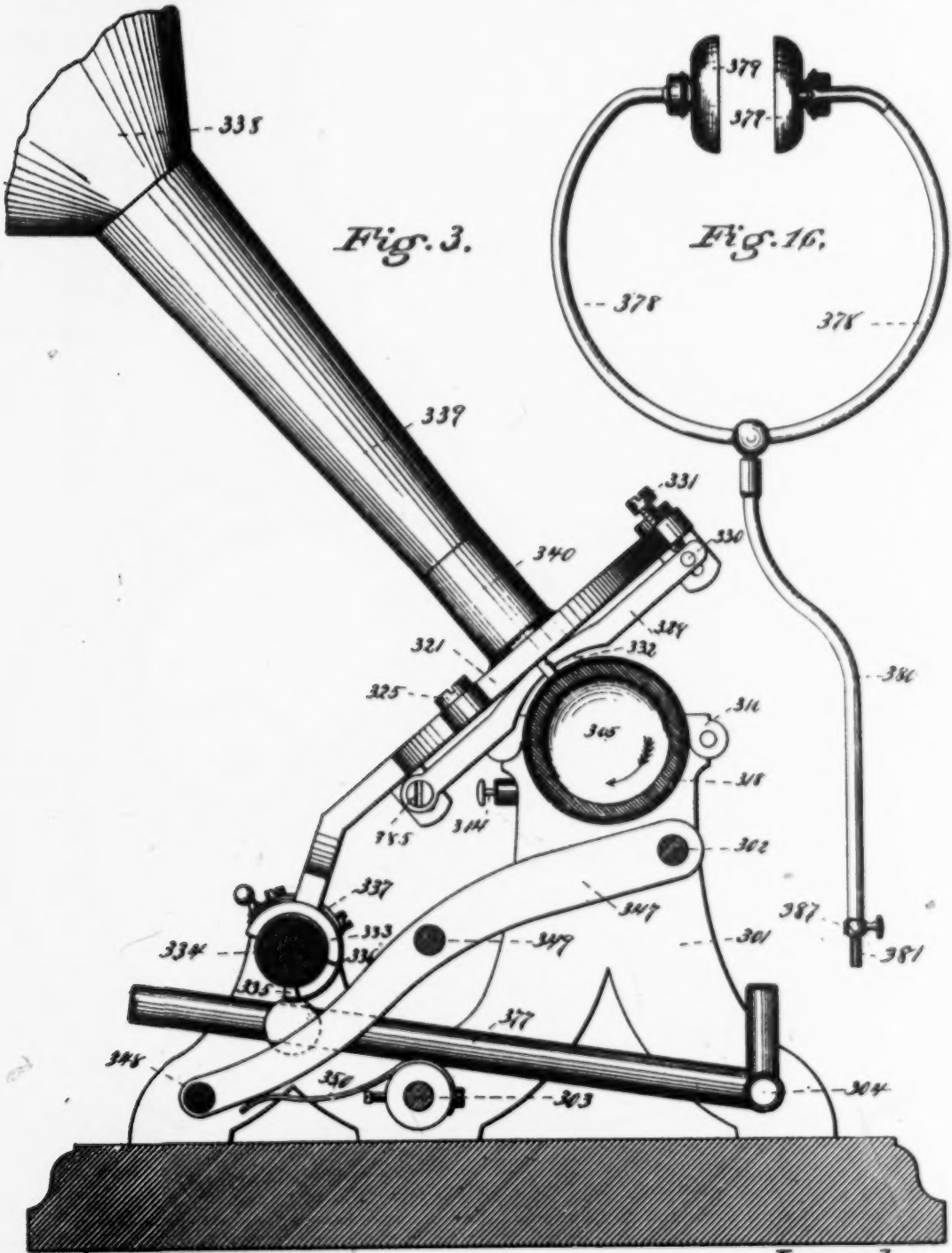

Fig. 3.

Fig. 16.

Witnesses
W. A. Schumbrue
Philip Mauro

Inventor
Sumner Tainter by
A. Pollok
his attorney.

(No Model.) 5 Sheets—Sheet 4.

S. TAINTER.

APPARATUS FOR RECORDING AND REPRODUCING SOUNDS.

No. 341,288. Patented May 4, 1886.

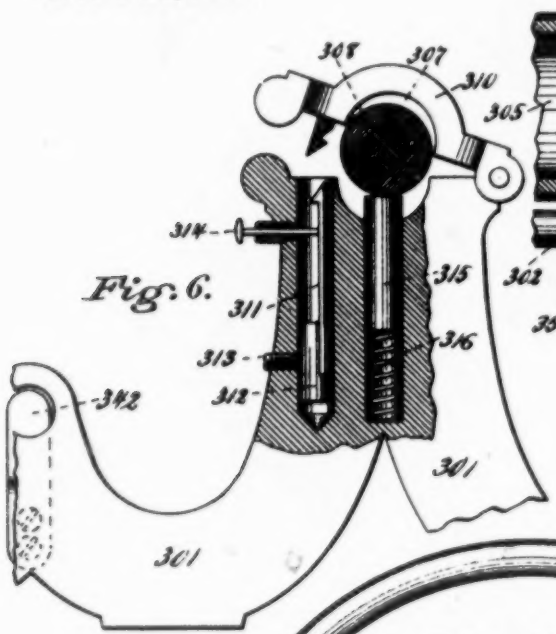

Fig. 6.

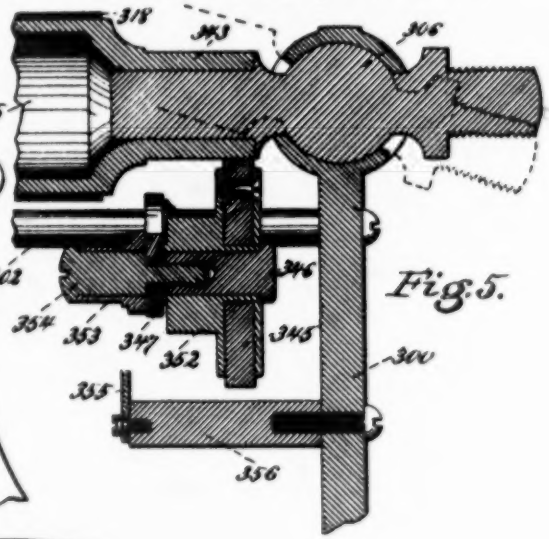

Fig. 5.

Fig. 4.

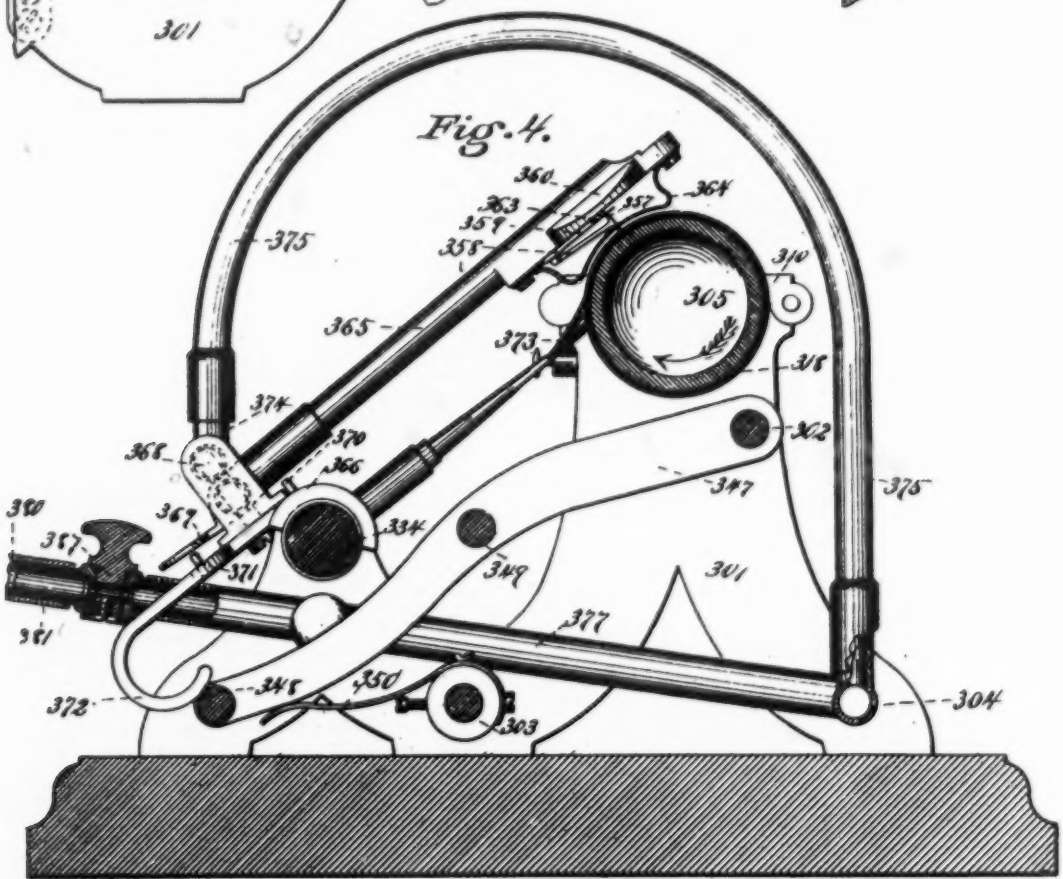

Witnesses
H. A. Schoumburg.
Philip Mauro.

Inventor
Sumner Tainter by
A. Pollok
his attorney.

(No Model.) 5 Sheets—Sheet 5.

S. TAINTER.

APPARATUS FOR RECORDING AND REPRODUCING SOUNDS.

No. 341,288. Patented May 4, 1886.

Fig. 7.

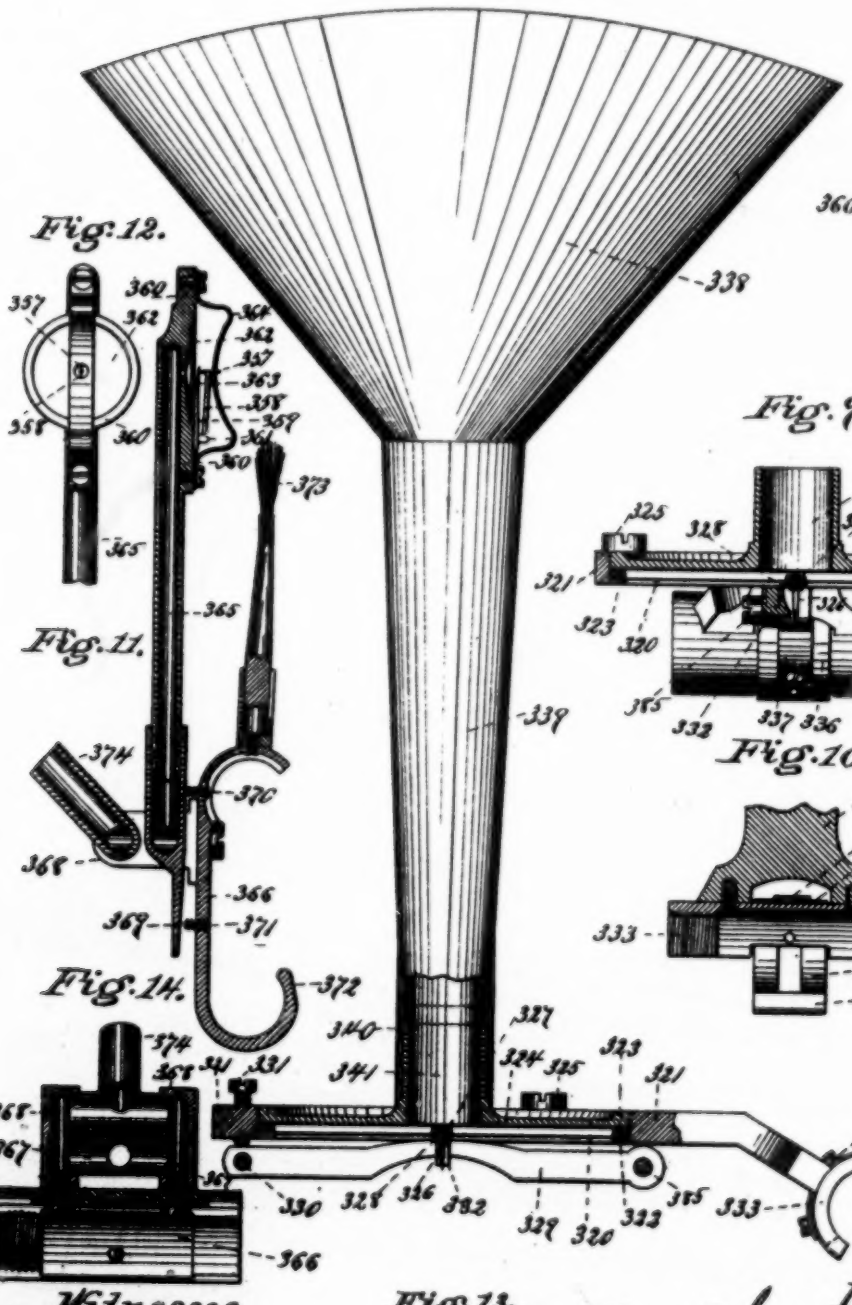

Fig. 12.

Fig. 11.

Fig. 14.

Fig. 15.

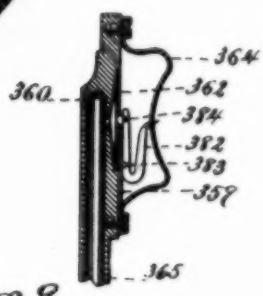

Fig. 9.

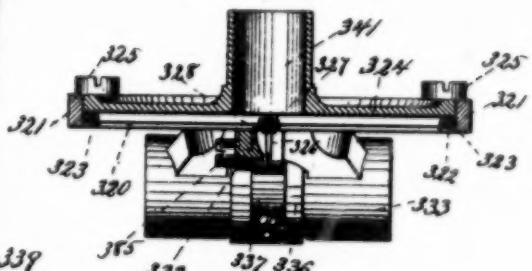

Fig. 10.

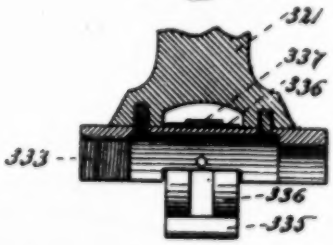

Fig. 13.

Witnesses
W. A. Schoumburn,

Inventor
Sumner Tainter

UNITED STATES PATENT OFFICE.

SUMNER TAINTER, OF WASHINGTON, DISTRICT OF COLUMBIA.

APPARATUS FOR RECORDING AND REPRODUCING SOUNDS.

SPECIFICATION forming part of Letters Patent No 341,288, dated May 4, 1886.

Application filed December 4, 1885. Serial No. 184,655. (No model.)

To all whom it may concern:

Be it known that I, SUMNER TAINTER, a resident of Washington, in the District of Columbia, have invented a new and useful Improvement in Apparatus for Recording and Reproducing Sounds or Sonorous Vibrations, which improvement is fully set forth in the following specification.

This invention has for its object to increase the general efficiency of apparatus for recording and reproducing speech and other sounds, commonly known as "phonographs;" and it consists, principally, in the following improvements:

First. A new recording-tablet is employed. It consists of a hollow cylinder or tube of paper, or other suitable material, coated with wax or wax-like composition, preferably a compound or mixture of beeswax and paraffine. The record is cut in the coating. The advantages of this form of tablet are that it may be very light while having sufficient stiffness to retain its form and avoid the danger of cracking the coating, that it is compact and adapted for transmission through the mails or otherwise, that the recording surface is continuous, and that it can very readily be placed on and removed from the holder by which it is supported and rotated in recording and reproducing.

Second. The tablet-holder is made in the form of a cylinder, over which the tubular tablet can be forced or slipped and from which it can be removed as desired. This cylinder may be solid; but for lightness it is preferably made hollow. It is of metal, or may be of other solid material. It is journaled in bearings, and is provided with a crank or other means for rotating the same.

Third. In order to support the tablet-holder in the most solid manner, it is provided with a journal at each end, and the journals and bearings are constructed to prevent end motion. It is made detachable from its support at one or both ends, in order to permit the placing and removal of the tablet. It will be understood that any ordinary or suitable from the machine-frame when this operation is performed, a ball-journal fitting in a cup or socket bearing is employed at one end, (the other end being made detachable from the machine-frame,) so that the holder can readily be tipped up and held in that position while placing or removing the tablet. The ball-journal and socket-bearing prevent end motion of the tablet-holder.

Fifth. With the object of further facilitating the placing and removal of the tablet, the detachable end of the tablet-holder is held down by means of a catch or other device which can readily be released, and a spring is combined with the holder in such a way as to raise the detachable end thereof when the catch is released.

Sixth. The journal at the detachable end of the tablet-holder, instead of resting directly upon the machine-frame, or a bearing attached thereto, is provided with a box or sleeve which fits over the journal and forms the bearing therefor. This box or sleeve remains on the journal when it is detached, and protects it from dirt, as well as prevents the lubricant on the journal from soiling the hands of the person using the machine. The spring for raising the holder acts upon this box, (a rod being interposed,) and the journal is relieved of its pressure. Another advantage which the use of this box or sleeve gives is that if the two bearings in the machine-frame are not precisely in line the box or sleeve may adjust itself properly without jamming the journal. The very slight space which always intervenes when two separate pieces rest in contact will suffice to compensate for the very slight irregularity in alignment which a careful workman would leave.

Seventh. For recording the sonorous vibrations in or on the tablet, and for producing the sounds from the record, the recording or the reproducing instrument (called hereinafter "recorder" and "reproducer," respectively,) is moved lengthwise of the tablet by a screw, which is revolved at a less speed than the tablet. Thus with a

(No Model.) 5 Sheets—Sheet 5.

S. TAINTER.

APPARATUS FOR RECORDING AND REPRODUCING SOUNDS.

No. 341,288. Patented May 4, 1886.

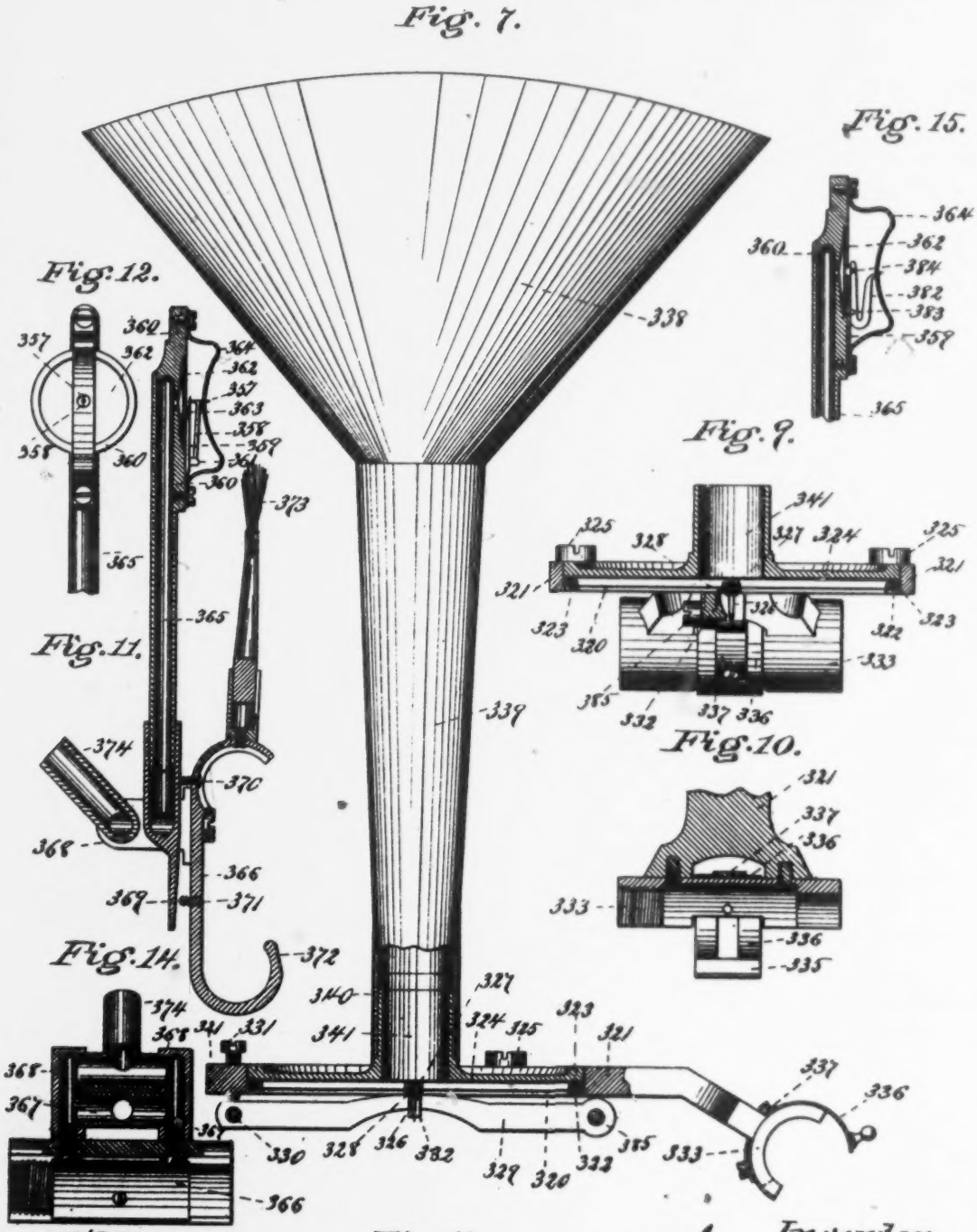

Witnesses
W. A. Schoenborn,
Philip H. Mauro

Inventor
Sumner Tainter
by A. Pollok
his attorney.

UNITED STATES PATENT OFFICE.

SUMNER TAINTER, OF WASHINGTON, DISTRICT OF COLUMBIA.

APPARATUS FOR RECORDING AND REPRODUCING SOUNDS.

SPECIFICATION forming part of Letters Patent No 341,288, dated May 4, 1886.

Application filed December 4, 1885. Serial No. 184,655. (No model.)

To all whom it may concern:

Be it known that I, SUMNER TAINTER, a resident of Washington, in the District of Columbia, have invented a new and useful Improvement in Apparatus for Recording and Reproducing Sounds or Sonorous Vibrations, which improvement is fully set forth in the following specification.

This invention has for its object to increase the general efficiency of apparatus for recording and reproducing speech and other sounds, commonly known as "phonographs;" and it consists, principally, in the following improvements:

First. A new recording-tablet is employed. It consists of a hollow cylinder or tube of paper, or other suitable material, coated with wax or wax-like composition, preferably a compound or mixture of beeswax and paraffine. The record is cut in the coating. The advantages of this form of tablet are that it may be very light while having sufficient stiffness to retain its form and avoid the danger of cracking the coating, that it is compact and adapted for transmission through the mails or otherwise, that the recording surface is continuous, and that it can very readily be placed on and removed from the holder by which it is supported and rotated in recording and reproducing.

Second. The tablet-holder is made in the form of a cylinder, over which the tubular tablet can be forced or slipped and from which it can be removed as desired. This cylinder may be solid; but for lightness it is preferably made hollow. It is of metal, or may be of other solid material. It is journaled in bearings, and is provided with a crank or other means for rotating the same.

Third. In order to support the tablet-holder in the most solid manner, it is provided with a journal at each end, and the journals and bearings are constructed to prevent end motion. It is made detachable from its support at one or both ends, in order to permit the placing and removal of the tablet. It will be understood that any ordinary or suitable means may be used for this purpose; but it is preferred to use the means next to be described.

Fourth. To facilitate the placing of the tablet on the holder and its removal therefrom, and to avoid the removal of the tablet-holder from the machine-frame when this operation is performed, a ball-journal fitting in a cup or socket bearing is employed at one end, (the other end being made detachable from the machine-frame,) so that the holder can readily be tipped up and held in that position while placing or removing the tablet. The ball-journal and socket-bearing prevent end motion of the tablet-holder.

Fifth. With the object of further facilitating the placing and removal of the tablet, the detachable end of the tablet-holder is held down by means of a catch or other device which can readily be released, and a spring is combined with the holder in such a way as to raise the detachable end thereof when the catch is released.

Sixth. The journal at the detachable end of the tablet-holder, instead of resting directly upon the machine-frame, or a bearing attached thereto, is provided with a box or sleeve which fits over the journal and forms the bearing therefor. This box or sleeve remains on the journal when it is detached, and protects it from dirt, as well as prevents the lubricant on the journal from soiling the hands of the person using the machine. The spring for raising the holder acts upon this box, (a rod being interposed,) and the journal is relieved of its pressure. Another advantage which the use of this box or sleeve gives is that if the two bearings in the machine-frame are not precisely in line the box or sleeve may adjust itself properly without jamming the journal. The very slight space which always intervenes when two separate pieces rest in contact will suffice to compensate for the very slight irregularity in alignment which a careful workman would leave.

Seventh. For recording the sonorous vibrations in or on the tablet, and for producing the sounds from the record, the recording or the reproducing instrument (called hereinafter "recorder" and "reproducer," respectively,) is moved lengthwise of the tablet by a screw, which is revolved at a less speed than the tablet. Thus with a comparatively coarse-threaded screw the lines may be traced on the tablet very close together. Heretofore the lines were the same distance apart as the threads of the screw.

Eighth. To enable the recorder and repro-

ducer readily to be applied to and removed from the screw, so that one screw can be used for both instruments, they are each provided with a divided or partial nut, which engages the screw. To prevent the instrument from being disengaged accidentally, a guard is or may be provided which can be slipped under the screw when the instrument is in place, or be withdrawn when it is desired to remove it. Both the reproducer and the recorder may have such a guard; but practically it is more important for the recorder.

Ninth. Instead of having the recorder and reproducer mounted upon a slide moving in ways or guides, and connected with a screw for moving the same, they are mounted on a carrier, which is not only engaged by said screw, but supported by the same, so as to be movable lengthwise of the screw, and capable also of turning on it as on a journal. Thus devices heretofore considered necessary are dispensed with and a movement of the recorder or reproducer toward and away from the tablet is provided for.

Tenth. It is often desirable, especially in reproducing, to stop the operation of the machine temporarily. To enable this to be effected instantly without stopping the main shaft of the machine, mechanism is provided for putting the feed-screw out of action, and at the same time automatically lifting the instrument clear of the record. Heretofore it has been necessary to stop the machine entirely. This is not desirable, because in stopping and restarting the machine a difference in speed, which appears on the record or in the sounds reproduced, is almost certainly made, particularly where a fly-wheel is used to give steadiness of motion.

Eleventh. It is also desirable in reproducing to be able to repeat a word, a sentence, or paragraph. To effect this a reversing as well as a stop mechanism is employed, so that by bringing said mechanism into action the motion of the reproducer is reversed and the instrument is brought back to the beginning of the part to be repeated, being meanwhile lifted clear of the record, which continues or may continue to revolve in the same direction at a uniform speed.

Twelfth. In order that the depth of the record may be unaffected by the slight distortions of the recording-surface, (which it is very difficult to avoid, whether this surface be plane, as in the disk-tablet, or cylindrical, as in the improved form of tablet before indicated,) the recorder is pressed toward the recording-tablet by yielding pressure, (such as that of gravity or a spring,) and is provided with a rest, which bears upon the tablet. The recording-style projects beyond this rest and is connected with a diaphragm or other known or suitable means for impressing sonorous vibrations upon it independently of the rest. By having the recorder maintained always at sible to cut effectively a shallower record than can be done otherwise, because if the recorder is held stationary the depth of the record must always be greater than the variations in the distance of the recording-surface due to the distortions thereof, and, on the other hand, if the yielding pressure of the recorder is borne by the style it will, if heavy enough for other purposes, press the style to a greater depth than is otherwise necessary. The use of the rest thus relieves the recording-style of pressure, and enables it to be mounted more sensitively and to be made lighter, while at the same time and for a like reason its amplitude of vibration under a given impulse and consequently the strength of the record are increased. The rest could, of course, be used with any ordinary or suitable mode of mounting the style.

Thirteenth. To regulate the depth of the record the rest is made adjustable lengthwise of the recording-style.

Fourteenth. In order to secure the most sensitive mounting for the recording-style, the latter is made from a short piece of wire and is attached directly to a diaphragm, so as to be carried thereby, the means preferably employed being a screw-thread on the style, a nut of hard rubber engaging the same, and a disk or washer of hard rubber, between which and the nut the diaphragm is clamped.

Fifteenth. A sound conveyer or concentrator is used for the recorder, which concentrator comprises a flaring mouth-piece of elliptical or oval section and a tapering tube forming a continuation thereof. It is found that a mouth-piece which concentrates the sound is desirable to increase the strength of the record, that a mouth-piece which covers the nose is desirable to convey the nasal as well as other vibrations, and that a tapering tube is desirable to amplify and re-enforce the sound-waves. It is found that the longer this tube is, within certain limits, the greater its re-enforcement of the sound; but that a too great length gives a hollow effect, as when words are spoken into an empty barrel. For the sake of lightness it is preferred to make the mouth-piece and tube of thin sheets of hard rubber, or of paper, or the like material. Metal mouth-pieces and tubes have also been used with good effect.

Sixteenth. Where the record is cut in wax the little shavings or chips are apt to cling to the record and have to be brushed off before reproducing. This can be done by hand; but it is not desirable to rely wholly upon hand-brushing, as too much care would have to be exercised to insure that no particles adhere. The record is also liable to collect dust. To avoid difficulty on these accounts without care on the part of the user, the reproducer is provided with a small brush, which bears upon the tablet and sweeps the record in advance of the reproducing-style.

recording-style not only moves lengthwise or at right angles to the recording-surface, but has or is liable to have a side vibration, which of course is recorded in the tablet. These side vibrations produce errors in reproducing unless means are provided for enabling the reproducing-style to move sidewise also. The mounting of the reproducer on a universal joint obviates the difficulty to a certain extent, but not altogether satisfactorily, since the inertia due to the large mass of the reproducer is too great for it to respond as quickly as required. The difficulty is in the present invention overcome much more thoroughly by supporting the reproducing-style so that it, or at least the end in contact with the record, can move sidewise independently of the diaphragm or other device upon which it impresses the vibrations. This freedom to move sidewise can be secured by allowing the style to rock upon the end in contact with the diaphragm or other device behind, or by making the style in whole or in part of flexible material, or by mounting it on a flexible support, the flexibility of course being in the required direction.

Eighteenth. In order to allow the reproducing-style the greatest freedom of side movement, while insuring its return to a central position, and without impairing to a serious extent its rigidity in other directions, a comparatively broad and thin strip of spring metal, placed on edge is connected with or forms part of the reproducing-style. Such a strip is very flexible to side pressures, but comparatively rigid to other pressures. The strip is fastened to the diaphragm, or to the device upon which it is desired to impress the vibrations, or it is otherwise hinged so that it can impress vibrations on said device; or said strip may be rigidly connected with the frame of the reproducer and the style be flexibly connected with the outer end of the strip. Preferably the reproducing-style is fastened to the end of a thin metal strip parallel with the width thereof, so as to form a hammer-like arrangement, the style being the hammer-head. It is a pin or wire several times as thick as the metal strip. The vibrations are transmitted through the hammer-head, the metal strip being attached to a spring, or it may be otherwise hinged to the frame of the reproducer.

Nineteenth. In transmitting the vibrations to the diaphragm it is found that with a rigid connection between the record and the diaphragm pronounced foreign vibrations are impressed upon the diaphragm or its substitute, producing scratching noises. These foreign noises can be lessened without diminishing the reproduced speech to the same extent by the interposition of a flat metal spring in such a way that while serving as the frame of

produce the scratching noises to the greatest extent, because they are more minute and rapid than speech-vibrations. Heretofore a section of rubber tubing has been interposed between the style and diaphragm; but it cannot be made as delicate as a metal spring, and for other reasons, also, is not so advantageous. For example, it is believed that it does not transmit the true vibrations of the record with as much clearness, the rubber loses its elasticity after a short time, and the tubular form of spring is less compact and less easily secured in place.

Twentieth. Another difficulty in reproducing is the passage of the style from one elevation of the record to the next without descending to the bottom of the space between. This causes a rattling sound, and sometimes makes the reproduction unintelligible. It is overcome to a useful extent, if not entirely, by combining with the style a quick-returning spring, by which the style will be pressed to the bottom of the record in the short space between two elevations. This spring should be of quicker return than the diaphragm. It is evident that the same spring may perform this function and also that of absorbing the foreign vibrations.

Twenty-first. The diaphragm is pressed against a concave seat whose walls converge like the walls of a cone, or of a section of a sphere, ellipsoid, paraboloid, or the like toward an opening through which the sound can escape. Thus a space of the general shape of a plano-convex lens, or, taking into consideration the slight convexity of the inner side of the diaphragm of a concavo-convex lens, is formed behind the diaphragm. This form of space is found to convey the sounds better than the flat space, such as customary in speaking-telephone receivers as well as in the ordinary phonograph. This concave seat for the diaphragm is also advantageous, as it makes the latter self-centering. A spring bearing upon the diaphragm holds it in place and also strains it. This spring may or may not be employed for absorbing the foreign vibrations, or for giving a quick return to the style, or for both. The arrangement prefetably employed is to have a light flat spring project above the diaphragm, a block (say of cork) being interposed between the spring and the diaphragm and the style pressing against the end of the spring a short distance beyond the block. The block may be secured in the most effective position or it may be left unfastened, so that it can be adjusted lengthwise of the spring to increase or diminish the part projecting beyond the block or to bring it directly under the style. In this last position the loudest reproduction is obtained, but the scratching and rattling noises are also the most pronounced.

ducer readily to be applied to and removed from the screw, so that one screw can be used for both instruments, they are each provided with a divided or partial nut, which engages the screw. To prevent the instrument from being disengaged accidentally, a guard is or may be provided which can be slipped under the screw when the instrument is in place, or be withdrawn when it is desired to remove it. Both the reproducer and the recorder may have such a guard; but practically it is more important for the recorder.

Ninth. Instead of having the recorder and reproducer mounted upon a slide moving in ways or guides, and connected with a screw for moving the same, they are mounted on a carrier, which is not only engaged by said screw, but supported by the same, so as to be movable lengthwise of the screw, and capable also of turning on it as on a journal. Thus devices heretofore considered necessary are dispensed with and a movement of the recorder or reproducer toward and away from the tablet is provided for.

Tenth. It is often desirable, especially in reproducing, to stop the operation of the machine temporarily. To enable this to be effected instantly without stopping the main shaft of the machine, mechanism is provided for putting the feed-screw out of action, and at the same time automatically lifting the instrument clear of the record. Heretofore it has been necessary to stop the machine entirely. This is not desirable, because in stopping and restarting the machine a difference in speed, which appears on the record or in the sounds reproduced, is almost certainly made, particularly where a fly-wheel is used to give steadiness of motion.

Eleventh. It is also desirable in reproducing to be able to repeat a word, a sentence, or paragraph. To effect this a reversing as well as a stop mechanism is employed, so that by bringing said mechanism into action the motion of the reproducer is reversed and the instrument is brought back to the beginning of the part to be repeated, being meanwhile lifted clear of the record, which continues or may continue to revolve in the same direction at a uniform speed.

Twelfth. In order that the depth of the record may be unaffected by the slight distortions of the recording-surface, (which it is very difficult to avoid, whether this surface be plane, as in the disk-tablet, or cylindrical, as in the improved form of tablet before indicated,) the recorder is pressed toward the recording-tablet by yielding pressure, (such as that of gravity or a spring,) and is provided with a rest, which bears upon the tablet. The recording-style projects beyond this rest and is connected with a diaphragm or other known or suitable means for impressing sonorous vibrations upon it independently of the rest. By having the recorder maintained always at a given distance from the recording-surface independently of the recording-style, it is possible to cut effectively a shallower record than can be done otherwise, because if the recorder is held stationary the depth of the record must always be greater than the variations in the distance of the recording-surface due to the distortions thereof, and, on the other hand, if the yielding pressure of the recorder is borne by the style it will, if heavy enough for other purposes, press the style to a greater depth than is otherwise necessary. The use of the rest thus relieves the recording-style of pressure, and enables it to be mounted more sensitively and to be made lighter, while at the same time and for a like reason its amplitude of vibration under a given impulse and consequently the strength of the record are increased. The rest could, of course, be used with any ordinary or suitable mode of mounting the style.

Thirteenth. To regulate the depth of the record the rest is made adjustable lengthwise of the recording-style.

Fourteenth. In order to secure the most sensitive mounting for the recording style, the latter is made from a short piece of wire and is attached directly to a diaphragm, so as to be carried thereby, the means preferably employed being a screw-thread on the style, a nut of hard rubber engaging the same, and a disk or washer of hard rubber, between which and the nut the diaphragm is clamped.

Fifteenth. A sound conveyer or concentrator is used for the recorder, which concentrator comprises a flaring mouth-piece of elliptical or oval section and a tapering tube forming a continuation thereof. It is found that a mouth-piece which concentrates the sound is desirable to increase the strength of the record, that a mouth-piece which covers the nose is desirable to convey the nasal as well as other vibrations, and that a tapering tube is desirable to amplify and re-enforce the sound-waves. It is found that the longer this tube is, within certain limits, the greater its re-enforcement of the sound; but that a too great length gives a hollow effect, as when words are spoken into an empty barrel. For the sake of lightness it is preferred to make the mouth-piece and tube of thin sheets of hard rubber, or of paper, or the like material. Metal mouth-pieces and tubes have also been used with good effect.

Sixteenth. Where the record is cut in wax the little shavings or chips are apt to cling to the record and have to be brushed off before reproducing. This can be done by hand; but it is not desirable to rely wholly upon hand-brushing, as too much care would have to be exercised to insure that no particles adhere. The record is also liable to collect dust. To avoid difficulty on these accounts without care on the part of the user, the reproducer is provided with a small brush, which bears upon the tablet and sweeps the record in advance of the reproducing-style.

Seventeenth. The record is not always perfectly true or straight—that is to say, the

recording-style not only moves lengthwise or at right angles to the recording-surface, but has or is liable to have a side vibration, which of course is recorded in the tablet. These side vibrations produce errors in reproducing unless means are provided for enabling the reproducing-style to move sidewise also. The mounting of the reproducer on a universal joint obviates the difficulty to a certain extent, but not altogether satisfactorily, since the inertia due to the large mass of the reproducer is too great for it to respond as quickly as required. The difficulty is in the present invention overcome much more thoroughly by supporting the reproducing-style so that it, or at least the end in contact with the record, can move sidewise independently of the diaphragm or other device upon which it impresses the vibrations. This freedom to move sidewise can be secured by allowing the style to rock upon the end in contact with the diaphragm or other device behind, or by making the style in whole or in part of flexible material, or by mounting it on a flexible support, the flexibility of course being in the required direction.

Eighteenth. In order to allow the reproducing style the greatest freedom of side movement, while insuring its return to a central position, and without impairing to a serious extent its rigidity in other directions, a comparatively broad and thin strip of spring metal, placed on edge is connected with or forms part of the reproducing style. Such a strip is very flexible to side pressures, but comparatively rigid to other pressures. The strip is fastened to the diaphragm, or to the device upon which it is desired to impress the vibrations, or it is otherwise hinged so that it can impress vibrations on said device; or said strip may be rigidly connected with the frame of the reproducer and the style be flexibly connected with the outer end of the strip. Preferably the reproducing-style is fastened to the end of a thin metal strip parallel with the width thereof, so as to form a hammer-like arrangement, the style being the hammer-head. It is a pin or wire several times as thick as the metal strip. The vibrations are transmitted through the hammer-head, the metal strip being attached to a spring, or it may be otherwise hinged to the frame of the reproducer.

Nineteenth. In transmitting the vibrations to the diaphragm it is found that with a rigid connection between the record and the diaphragm pronounced foreign vibrations are impressed upon the diaphragm or its substitute, producing scratching noises. These foreign noises can be lessened without diminishing the reproduced speech to the same extent by the interposition of a flat metal spring in such a way that while serving as the means of communicating vibrations to the diaphragm it can be bent independently. It is probable that this spring absorbs the vibrations which produce the scratching noises to the greatest extent, because they are more minute and rapid than speech-vibrations. Heretofore a section of rubber tubing has been interposed between the style and diaphragm; but it cannot be made as delicate as a metal spring, and for other reasons, also, is not so advantageous. For example, it is believed that it does not transmit the true vibrations of the record with as much clearness, the rubber loses its elasticity after a short time, and the tubular form of spring is less compact and less easily secured in place.

Twentieth. Another difficulty in reproducing is the passage of the style from one elevation of the record to the next without descending to the bottom of the space between. This causes a rattling sound, and sometimes makes the reproduction unintelligible. It is overcome to a useful extent, if not entirely, by combining with the style a quick-returning spring, by which the style will be pressed to the bottom of the record in the short space between two elevations. This spring should be of quicker return than the diaphragm. It is evident that the same spring may perform this function and also that of absorbing the foreign vibrations.

Twenty-first. The diaphragm is pressed against a concave seat whose walls converge like the walls of a cone, or of a section of a sphere, ellipsoid, paraboloid, or the like toward an opening through which the sound can escape. Thus a space of the general shape of a plano-convex lens, or, taking into consideration the slight convexity of the inner side of the diaphragm of a concavo-convex lens, is formed behind the diaphragm. This form of space is found to convey the sounds better than the flat space, such as customary in speaking-telephone receivers as well as in the ordinary phonograph. This concave seat for the diaphragm is also advantageous, as it makes the latter self-centering. A spring bearing upon the diaphragm holds it in place and also strains it. This spring may or may not be employed for absorbing the foreign vibrations, or for giving a quick return to the style, or for both. The arrangement preferably employed is to have a light flat spring project above the diaphragm, a block (say of cork) being interposed between the spring and the diaphragm and the style pressing against the end of the spring a short distance beyond the block. The block may be secured in the most effective position or it may be left unfastened, so that it can be adjusted lengthwise of the spring to increase or diminish the part projecting beyond the block or to bring it directly under the style. In this last position the loudest reproduction is obtained, but the scratching and rattling noises are also the most pronounced.

Twenty-second. The diaphragm is preferably made of hard rubber, this material having been found to give out purer sounds, the minute foreign vibrations being absorbed to a

greater extent than with mica or metal, either of which and other materials also can be used with intelligible results.

Twenty-third. To protect the style from accidental injury, it is protected by a guard, beyond which only the rubbing end or point of the style projects. As a further protection, the guard is curved outward on either side of the style, forming horns, which, if the reproducer be placed face down on a table, sustain the weight instead of allowing it to come on the style. The particular form of guard is of course only suitable for use with a cylindrical record, which can enter between the horns to make contact with the style.

Twenty-fourth. The sounds from the reproducer can be conveyed to the ear in various ways; but preferably the space behind the diaphragm or other vibratory body is connected by a sound-conveying tube with a double ear-piece somewhat similar to a stethoscope. It consists of two elastic and flexible hollow branches provided each with a cup fastened to the branch by a ball-and-socket joint. The cups fit over the ears and are held against the head by the elasticity of the branches, the universal joint allowing each cup to adjust itself to the head of the user.

Twenty-fifth. It is found desirable in reproducing to modify the loudness of the reproduced sounds according to the sensitiveness of the ear of the listener. This effect can be produced by the adjustment of the block between the spring and the diaphragm mentioned above under the twenty-first head; but it is not always convenient or advantageous to produce it in that way—as, for example, if two persons are listening to the instrument at the same time. To accomplish the desired object, a stop-cock is placed in the sound-conveying tube between the reproducer-diaphragm and the ear, so that by partially closing the same more or less of the sounds can be cut off, as desired. Where more than one person is listening, each of the sound-conveyers may have its own stop-cock.

Twenty-sixth. When a device such as just described is used, or when any device is used which is to be held by the user, or to be placed close to his ear, there is always a liability of the user pulling upon or jarring the reproducer, and if this is not firmly secured of pulling it from the machine. To overcome this difficulty without interfering with the traverse of the reproducer in front of the record, a flexible connection adapted to convey sound, and at the same time not restrict the traverse of the reproducer, is provided between the reproducer and a tube or tubular coupling attached to the machine-frame. The ear-tube or other device is connected with this tube or coupling, so that any pull or thrust comes upon the solid machine-frame, and will or may detach the ear-tube rather than damaway from the record until the reproducer is in place on the screw, and in removing it to lift the style from the record before attempting to remove the reproducer. The object is to prevent injury to the record. To effect the desired result the standard of the reproducer is hinged to its base or carrier, and is provided with a tail or thumb piece, or some equivalent device, so that in grasping the base or carrier the thumb or other part of the hand pressing upon said tail will hold the reproducer away from the record. Upon release of the tail the reproducer rests by its weight (which is preferably made very small) upon the record.

The invention further comprises certain special constructions, combinations, and arrangements of parts, as hereinafter set forth, among which are included the combination, in one machine, of the several improvements already indicated, or of two or more of them.

Having explained the principle of the invention, a description will now be given of what is considered the best mode of applying the same, reference being had to the accompanying drawings, which form a part of this specification.

Figure 1 is a plan view of a machine or phonograph constructed in accordance with the invention, the reproducer being shown in place and the recorder omitted; Fig. 2, a vertical cross-section in elevation, looking to the right in Fig. 1; Fig. 3, a section in the plane of Fig. 2, but in elevation, looking to the left, the recorder being shown in place and its mouth-piece being broken away; Fig. 4, a view similar to Fig. 3, but with the reproducer in place instead of the recorder; Fig. 5, a partial vertical longitudinal section on line $x\,x$ of Fig. 2; Fig. 6, an elevation, partly in section, of a part of the left end of the machine. Fig. 7 is an elevation, partly in section, of the recorder, its carrier, and sound-concentrator; Fig. 8, a top view (on a reduced scale) of the sound-concentrator of the recorder; Fig. 9, a central section of the recorder in a plane at right angles to those of Figs. 3 and 7, showing the base or carrier in elevation, and Fig. 10 a section through the base or carrier of the recorder. Fig. 11 is a central vertical section of the reproducer, its carrier, and certain accessory parts; Fig. 12, a face view of the reproducer; Fig. 13, a perspective detail view; Fig. 14, a section through the base or carrier of the instrument; Fig. 15, a section illustrating a modified form of style; Fig. 16, an elevation, partly in section, (on a reduced scale,) of a listening device with double ear-pieces; and Fig. 17 a section illustrating a third modification of the reproducer.

The frame of the machine, as shown, consists of two upright side pieces, 300 and 301, connected by tie-rods 302 and 303 and the tube 304, which serves as a tie-rod. The tablet-

shaped and rests in a socket, (see Fig. 5,) which permits the tablet-holder to be tilted up, as indicated in dotted lines, as well as to be revolved, while endwise motion is effectually prevented. The fly-wheel 317, provided with a crank-handle, is mounted on a prolongation of the journal and serves to revolve the tablet-holder. The left journal, 307, which is or may be cylindrical, fits and revolves within a box, 308, which is held in place on the journal by a screw, 309, in the end thereof. The box 308 is confined between a seat on the side piece, 301, and the hinged cap 310, which is held down by the spring-catch 311, (see Fig. 6,) fastened at the bottom in the plug 312, which is adjustably retained in position by the set-screw 313. The catch can be released at will by a push-pin, 314. Below the journal 307 is a follower, 315, fitting into and movable in a hole in side piece, 301, acted upon by the spiral compression-spring 316, placed below it in the hole. The box 308 rests upon the top of the follower and relieves the journal of all pressure from the spring 316 when the cap 310 is held down by the catch 311. This pressure prevents the box turning. On releasing the catch 311 the spring 316 expands and throws up the journal 307 and the cap 310, as shown in Fig. 6. The cap can then be turned back and the tablet-holder be tipped up and held in an inclined position by a hand on the fly-wheel 317. The tablet consists of an elongated hollow cylinder or tube, 318, of paper or pasteboard—say one-fortieth of an inch in thickness—coated with a layer about one-thirtieth ($\frac{1}{30}$) of an inch in thickness of a compound of one part, by weight, of white beeswax and two parts of paraffine. The beeswax and paraffine should be melted and stirred together, and then filtered, unless they are entirely free from sticks, dirt, and other foreign particles. The coating is or may be applied by stopping the ends of the cylinder, partly immersing it in a bath of the melted composition and turning it therein one or more times, removing it and allowing the material to harden, keeping it in motion meanwhile to prevent running, then immersing and rotating it again, and allowing the adherent layer to harden, and so continuing until a coating of rather more than the thickness above indicated is attained. The surface is then turned smooth in a lathe, being supported on a cylinder like the tablet holder 305. The tablet is then ready for use by placing over the holder, or it may be kept until wanted. In keeping care should be taken to prevent access of dust. After the tablet has been placed on the holder the detachable end of the latter is pressed down into its bearing, and the cap 310 is engaged by the catch 311, which holds it down.

The record is made on or in the wax coating of the tablet by the instrument shown in a frame, 321, between the flange 322 and a ring, 323, of soft rubber tubing, which is held down by the back plate 324, and screws 325, tapped into the frame. The heads of these screws project over the edge of the back plate. The recording-style 326, formed of a steel wire (say, one-thirty-second of an inch in diameter) sharpened at the front or operating end, like an ordinary round-pointed turning tool and screw threaded at the other, is fastened to the center of the diaphragm by the nut 327 and washer 328, which are on opposite sides of the diaphragm; and clamp it between them. The cutting-edge of the style is preferably shaped to cut a groove of curved rather than of V-shaped cross-section. A bar, 329, is hinged at one end to the frame 321 by a pivot screw-pin, 385, and at the other adjustably but rigidly fastened thereto by a screw, 330. A second screw, 331, bearing at the point against the top of the bar 329, assists in securing an exact adjustment and in holding the bar rigid. At the middle of the bar is an enlargement, 332, which extends into close proximity to the recording-style (see Fig. 9) and whose bottom is polished or made smooth, so that it may bear upon the wax-coated tablet and move over it without injury to the wax surface. The frame 321 is provided with a base or carrier, 333, in the form of a half-nut. In use this nut is supported and engaged by the rotatory feed-screw 334, which is journaled in bearings in the side pieces, 300 and 301. The base or carrier is elongated to give a sufficient bearing on the screw to prevent the tipping of the recorder sidewise. To assist in preventing this, and also to prevent the carrier being lifted from the screw, a guard is provided, which consists of a block, 335, attached to the end of a curved slide, 336. This slide is guided by the piece 337, and can be turned from the position shown in Fig. 7 when the guard does not interfere with the placing of the carrier on the screw into the position shown in Figs. 3 and 10, when it prevents the removal. The carrier is, however, free to turn on the screw, as on an axle, so that the recorder, under the action of gravity, will press against the tablet, the bar 329 forming a rest to support it. The recording-style projects beyond the rest and enters the wax coating, penetrating it a distance which is regulated by the adjustment of said rest or bar 329. The sound-conveyer consists of an elliptical mouth-piece, 338, and a tapering tube, 339, both made, for lightness, of hard rubber, in thin sheets—say one-thirty-second ($\frac{1}{32}$) of an inch thick. A metal thimble, 340, is attached to the small end of the tapering tube, which fits over a tubular projection, 341, on the back plate. The rotation of the feed-screw 334 moves the recorder lengthwise of the recording-tablet, and this movement, in connection with the rotation of the tablet causes the style to

greater extent than with mica or metal, either of which and other materials also can be used with intelligible results.

Twenty-third. To protect the style from accidental injury, it is protected by a guard, beyond which only the rubbing end or point of the style projects. As a further protection, the guard is curved outward on either side of the style, forming horns, which, if the reproducer be placed face down on a table, sustain the weight instead of allowing it to come on the style. The particular form of guard is of course only suitable for use with a cylindrical record, which can enter between the horns to make contact with the style.

Twenty-fourth. The sounds from the reproducer can be conveyed to the ear in various ways; but preferably the space behind the diaphragm or other vibratory body is connected by a sound-conveying tube with a double ear-piece somewhat similar to a stethoscope. It consists of two elastic and flexible hollow branches provided each with a cup fastened to the branch by a ball-and-socket joint. The cups fit over the ears and are held against the head by the elasticity of the branches, the universal joint allowing each cup to adjust itself to the head of the user.

Twenty-fifth. It is found desirable in reproducing to modify the loudness of the reproduced sounds according to the sensitiveness of the ear of the listener. This effect can be produced by the adjustment of the block between the spring and the diaphragm mentioned above under the twenty-first head; but it is not always convenient or advantageous to produce it in that way—as, for example, if two persons are listening to the instrument at the same time. To accomplish the desired object, a stop-cock is placed in the sound-conveying tube between the reproducer-diaphragm and the ear, so that by partially closing the same more or less of the sounds can be cut off, as desired. Where more than one person is listening, each of the sound-conveyers may have its own-stop-cock.

Twenty-sixth. When a device such as just described is used, or when any device is used which is to be held by the user, or to be placed close to his ear, there is always a liability of the user pulling upon or jarring the reproducer, and if this is not firmly secured of pulling it from the machine. To overcome this difficulty without interfering with the traverse of the reproducer in front of the record, a flexible connection adapted to convey sound, and at the same time not restrict the traverse of the reproducer, is provided between the reproducer and a tube or tubular coupling attached to the machine-frame. The ear-tube or other device is connected with this tube or coupling, so that any pull or thrust comes upon the solid machine-frame, and will or may detach the ear-tube rather than damage the machine.

Twenty-seventh. In placing the reproducer on the screw it is desirable to hold the style away from the record until the reproducer is in place on the screw, and in removing it to lift the style from the record before attempting to remove the reproducer. The object is to prevent injury to the record. To effect the desired result the standard of the reproducer is hinged to its base or carrier, and is provided with a tail or thumb piece, or some equivalent device, so that in grasping the base or carrier the thumb or other part of the hand pressing upon said tail will hold the reproducer away from the record. Upon release of the tail the reproducer rests by its weight (which is preferably made very small) upon the record.

The invention further comprises certain special constructions, combinations, and arrangements of parts, as hereinafter set forth, among which are included the combination, in one machine, of the several improvements already indicated, or of two or more of them.

Having explained the principle of the invention, a description will now be given of what is considered the best mode of applying the same, reference being had to the accompanying drawings, which form a part of this specification.

Figure 1 is a plan view of a machine or phonograph constructed in accordance with the invention, the reproducer being shown in place and the recorder omitted; Fig. 2, a vertical cross-section in elevation, looking to the right in Fig. 1; Fig. 3, a section in the plane of Fig. 2, but in elevation, looking to the left, the recorder being shown in place and its mouth-piece being broken away; Fig. 4, a view similar to Fig. 3, but with the reproducer in place instead of the recorder; Fig. 5, a partial vertical longitudinal section on line $x\,x$ of Fig. 2; Fig. 6, an elevation, partly in section, of a part of the left end of the machine. Fig. 7 is an elevation, partly in section, of the recorder, its carrier, and sound-concentrator; Fig. 8, a top view (on a reduced scale) of the sound-concentrator of the recorder; Fig. 9, a central section of the recorder in a plane at right angles to those of Figs. 3 and 7, showing the base or carrier in elevation, and Fig. 10 a section through the base or carrier of the recorder. Fig. 11 is a central vertical section of the reproducer, its carrier, and certain accessory parts; Fig. 12, a face view of the reproducer; Fig. 13, a perspective detail view; Fig. 14, a section through the base or carrier of the instrument; Fig. 15, a section illustrating a modified form of style; Fig. 16, an elevation, partly in section, (on a reduced scale,) of a listening device with double ear-pieces; and Fig. 17 a section illustrating a third modification of the reproducer.

The frame of the machine, as shown, consists of two upright side pieces, 300 and 301, connected by tie-rods 302 and 303 and the tube 304, which serves as a tie-rod. The tablet-holder 305, in the form of an elongated metal cylinder, is journaled in bearings at the top of the side pieces. The right journal, 306, is ball-

shaped and rests in a socket, (see Fig. 5,) which permits the tablet-holder to be tilted up, as indicated in dotted lines, as well as to be revolved, while endwise motion is effectually prevented. The fly-wheel 317, provided with a crank-handle, is mounted on a prolongation of the journal and serves to revolve the tablet-holder. The left journal, 307, which is or may be cylindrical, fits and revolves within a box, 308, which is held in place on the journal by a screw, 309, in the end thereof. The box 308 is confined between a seat on the side piece, 301, and the hinged cap 310, which is held down by the spring-catch 311, (see Fig. 6,) fastened at the bottom in the plug 312, which is adjustably retained in position by the set-screw 313. The catch can be released at will by a push-pin, 314. Below the journal 307 is a follower, 315, fitting into and movable in a hole in side piece, 301, acted upon by the spiral compression-spring 316, placed below it in the hole. The box 308 rests upon the top of the follower and relieves the journal of all pressure from the spring 316 when the cap 310 is held down by the catch 311. This pressure prevents the box turning. On releasing the catch 311 the spring 316 expands and throws up the journal 307 and the cap 310, as shown in Fig. 6. The cap can then be turned back and the tablet-holder be tipped up and held in an inclined position by a hand on the fly-wheel 317. The tablet consists of an elongated hollow cylinder or tube, 318, of paper or pasteboard—say one-fortieth of an inch in thickness—coated with a layer about one-thirtieth ($\frac{1}{30}$) of an inch in thickness of a compound of one part, by weight, of white beeswax and two parts of paraffine. The beeswax and paraffine should be melted and stirred together, and then filtered, unless they are entirely free from sticks, dirt, and other foreign particles. The coating is or may be applied by stopping the ends of the cylinder, partly immersing it in a bath of the melted composition and turning it therein one or more times, removing it and allowing the material to harden, keeping it in motion meanwhile to prevent running, then immersing and rotating it again, and allowing the adherent layer to harden, and so continuing until a coating of rather more than the thickness above indicated is attained. The surface is then turned smooth in a lathe, being supported on a cylinder like the tablet holder 305. The tablet is then ready for use by placing over the holder, or it may be kept until wanted. In keeping care should be taken to prevent access of dust. After the tablet has been placed on the holder the detachable end of the latter is pressed down into its bearing, and the cap 310 is engaged by the catch 311, which holds it down.

The record is made on or in the wax coating of the tablet by the instrument shown in Figs. 3 and 7 to 10. The diaphragm 320 (of mica, from six to twelve one-thousandths ($\frac{6}{1000}$ to $\frac{12}{1000}$) of an inch in thickness) is held in a frame, 321, between the flange 322 and a ring, 323, of soft rubber tubing, which is held down by the back plate 324, and screws 325, tapped into the frame. The heads of these screws project over the edge of the back plate. The recording-style 326, formed of a steel wire (say, one-thirty-second of an inch in diameter) sharpened at the front or operating end, like an ordinary round-pointed turning tool and screw threaded at the other, is fastened to the center of the diaphragm by the nut 327 and washer 328, which are on opposite sides of the diaphragm; and clamp it between them. The cutting-edge of the style is preferably shaped to cut a groove of curved rather than of V-shaped cross-section. A bar, 329, is hinged at one end to the frame 321 by a pivot screw-pin, 385, and at the other adjustably but rigidly fastened thereto by a screw, 330. A second screw, 331, bearing at the point against the top of the bar 329, assists in securing an exact adjustment and in holding the bar rigid. At the middle of the bar is an enlargement, 332, which extends into close proximity to the recording-style (see Fig. 9) and whose bottom is polished or made smooth, so that it may bear upon the wax-coated tablet and move over it without injury to the wax surface. The frame 321 is provided with a base or carrier, 333, in the form of a half-nut. In use this nut is supported and engaged by the rotatory feed-screw 334, which is journaled in bearings in the side pieces, 300 and 301. The base or carrier is elongated to give a sufficient bearing on the screw to prevent the tipping of the recorder sidewise. To assist in preventing this, and also to prevent the carrier being lifted from the screw, a guard is provided, which consists of a block, 335, attached to the end of a curved slide, 336. This slide is guided by the piece 337, and can be turned from the position shown in Fig. 7 when the guard does not interfere with the placing of the carrier on the screw into the position shown in Figs. 3 and 10, when it prevents the removal. The carrier is, however, free to turn on the screw, as on an axle, so that the recorder, under the action of gravity, will press against the tablet, the bar 329 forming a rest to support it. The recording-style projects beyond the rest and enters the wax coating, penetrating it a distance which is regulated by the adjustment of said rest or bar 329. The sound-conveyer consists of an elliptical mouth-piece, 338, and a tapering tube, 339, both made, for lightness, of hard rubber, in thin sheets—say one-thirty-second ($\frac{1}{32}$) of an inch thick. A metal thimble, 340, is attached to the small end of the tapering tube, which fits over a tubular projection, 341, on the back plate. The rotation of the feed-screw 334 moves the recorder lengthwise of the recording-tablet, and this movement, in connection with the rotation of the tablet, causes the style to trace a spiral line in the wax, which line becomes a sound-record by talking into the mouth-piece 338, and thereby impressing sonorous vibra-

tions upon the diaphragm and style. The style then cuts a variable line, whose irregularities or inequalities correspond to the sound to be recorded. The spiral line can be omitted for a given distance, when desired, by simply lifting the recorder from the tablet. The feed-screw 334 should be so mounted as to prevent endwise movement, which would tend to make the traced line more or less zigzag. As shown, a spring, 342, (see Figs. 1 and 6,) presses constantly upon the left end of the screw to keep it against the bearing at the opposite end. The feed-screw is revolved by the friction-wheels. (Shown in Figs. 1, 2, and 5.) In recording, the friction-pinion 343 on the tablet-holder communicates motion to the large wheel 344, fast on the feed-screw, through the intermediate 345. Thus the feed-screw has a much slower rotation than the tablet-holder, and the convolutions of the line traced on the tablet are much closer together than the threads of the feed-screw. The intermediate 345 is mounted on the stud 346, (see Fig. 5,) which is carried by a hinged frame, so that the intermediate can be moved out of contact with the pinion whenever it is desired to stop the feed, without interrupting the rotation of the tablet-holder. The hinged frame consists of side bars, 347, which are hinged separably on the tie-rod 302, and are rigidly connected with each other by tie-bars 348 and 349. A spring, 350, under each side bar tends to lift the frame and press the intermediate 345 against the pinion 343. The feed-screw is therefore normally in engagement with the tablet-holder; but can be disengaged at will by pressing upon the tie-bar 348. The friction-wheels 351 and 352 are for reversing the revolution of the feed-screw. The wheel or pinion 352 is simply a hub on the side of the intermediate 345. The wheel 351 presses against the pinion 352, and is mounted on a stud at the end of bent lever 353, which turns upon the screw-stud 354 in line with the stud 346. (See Fig. 5.) The lever 353 thus turns about the axis of the wheel 352, and the wheel 351 may roll over the surface of the wheel 352, so as to be pressed against and thus engage the pinion 343 on the tablet-holder. The short arm of the bent lever is connected by a link, 355, with the stud 356, itself secured fast to the side piece, 300. When, therefore, the tie-bar 348 and side bars, 347, are depressed, the lever, as shown in Fig. 2, is turned to the left, and when it is sufficiently depressed the wheel 351 is held against and engaged by the pinion 343. Motion is now communicated through the wheels 343, 351, 352, 345, and 344, the rotation of the feed-screw is reversed, and a more rapid rotation is imparted to it. The carrier will therefore be moved backward (to the left in Fig. 1) more rapidly than it was advanced. There will ordinarily be not much occasion to

welded or otherwise fastened to the end of a flexible strip, 358, of thin steel—say three one-thousandths ($\frac{3}{1000}$) of an inch in thickness—so as to project beyond both edges of the same like a hammer-head. The outer end of this style (which should be somewhat more tapering at the point than the recording-style) rubs over the record or tablet. The inner end presses upon a light flat spring, 359, fastened at the lower end to the frame 360 of the reproducer. The strip 358 is soldered into a slit of the ear 361, on the spring, which by bending between the ear 361, and where it is attached to the frame 360 allows the style and strip to be moved in or out, and thus serves to hinge the same to the said frame. The diaphragm 362, of hard rubber about seven one-thousandths ($\frac{7}{1000}$) of an inch in thickness, is pressed against a conical seat in the face of the frame 360 by means of the spring 359, between which and said diaphragm is a little block, 363, of cork. It serves the double function of pressing the diaphragm against its seat, and also of communicating vibrations to it. Cork is used because it is light and conveys vibrations well and has sufficient friction upon the diaphragm and spring to remain in the position in which it may be placed. By leaving it to be held by friction it can be adjusted by the user to give the best effects; but it can be secured by cement or otherwise in the position which the maker or adjuster of the instrument may determine. Preferably it occupies a position intermediate the style 357 and the edge of the diaphragm, as shown; but it can be set directly opposite the style. In the former position there is a certain length of the spring 359 beyond the cork, which length forms a tongue with a very high rate of normal vibration. It absorbs a considerable portion of the small vibrations which produce scratching noises, and it thus makes the articulation more distinct. It also reduces somewhat the loudness of the sounds reproduced, but the increased distinctness more than compensates for any loss in loudness.

Another effect which the tongue has is to return the style more perfectly when it has been pushed out by an elevation on the record. It does this because its normal vibration is quicker than that of the diaphragm or because its amplitude of vibration is larger, or for both reasons. It will be understood that this spring-tongue is compressed by the weight of the reproducer, which is sustained by the style. This weight is actually very small, the frame being made, for lightness, of hard rubber, but in comparison with the strength of the spring-tongue it is considerable. It will be observed that the diaphragm is strained by the spring in addition to the strain due to the weight of the reproducer. The inner end of the style 357 preferably rests in a hole or recess in the

front end of the style to take place with the greatest freedom. A bodily movement of the style sidewise could be permitted, if desired, but a stop should then be used to prevent it from being pushed off the spring 359.

To protect the style and other parts of the reproducer, a guard, 364, is fastened to the front of frame 360, and is perforated at the center for the passage of the style. On either side of the center it is bent outward to form horns to support the instrument when placed face downward on a table or flat surface.

The reproducer, consisting of the parts just described, is mounted upon a hollow standard, 365, which is hinged at the bottom to the carrier 366 by means of hollow trunnions 367, fitting in hollow uprights 368 on said carrier. The reproducer-standard 365 is provided with a thumb-piece, 369, which can be pressed to hold up the reproducer in placing the carrier on and removing it from the feed-screw 334. There are front and back screw-stops, 370 and 371, which limit the movement of the reproducer independently of the carrier. This latter is provided with a half-nut to rest upon and engage the feed-screw, the same as the carrier of the recorder. It is not provided with a guard to retain it on the feed-screw because it is considered unnecessary, particularly when a flexible sound-conveyer is employed, as will presently be described. It is provided with a tail or prolongation, 372, which rests upon the tie-bar 348, (see Fig. 4,) so that when this is depressed to stop or to reverse the feed-screw the carrier will turn to the left (the center of gravity being on that side of the feed-screw) and automatically lift the reproducing-style 357 from contact with the tablet 318, in or on which the record is formed. When the tie-bar 348 is released, the springs 350 raise it and turn the reproducer and its carrier to the right, so that the style again makes contact with the record. It will be observed that the pressure of the springs 350 does not force the style against the record, because the reproducer is hinged to its carrier and only its very light weight comes upon the reproducing-style and the record. On the carrier is a brush, 373, which, when the producer is in action, bears upon the record and clears it of dust or shavings of wax or other lightly-adhering matter in advance of the reproducing-style.

The hollow standard 365 serves to convey sound from the lenticular chamber behind the diaphragm into the uprights 368, with the interior of which the coupling 374 communicates. To this coupling a flexible sound-conveyer, 375, is attached at one end, the other end being connected with an upright branch of the tube 304. Thus the sound is conveyed with tubes 376 and 377, one at each end of the machine. A hearing-tube is or may be attached to either or both tubes. Preferably the apparatus shown in Fig. 16 is employed. It consists of two elastic and flexible hollow branches, 378, each provided at the outer end with a cup, 379, attached by a ball-and-socket joint, and a flexible sound-conveying tube, 380, for connecting both branches with the tube 376 or 377. As shown, there is a hollow metal coupling, 381, at the free end of the flexible tube 380, of such exterior diameter as to fit snugly in the tube which is to receive it. (See Fig. 4.) This coupling is provided with a stop-cock, 387, which can be turned to cut off more or less sound if the reproduction be too loud. This diminution in loudness makes the scratching noises less distracting to a person with a sensitive ear.

In use the cups 379 are placed one over each ear of the listener, the ball-and-socket joint permitting the cup to adjust itself to his head, and the elasticity of the branches 378 drawing them with sufficient pressure to support the apparatus.

The branches may be made of hard vulcanized rubber, in order to secure the requisite flexibility and elasticity; but it is evident that sound-conveying branches having these qualities could be constructed of various materials and in various ways.

Instead of applying the tube 380 to the tube 376 or 377, it may be connected directly with the coupling 374, the sound-conveyer 375 being omitted. This has the advantage of diminishing the length of tube between the reproducer and the ear of the listener, but is open to the objection that the reproducer is liable to be pulled from the machine by incautious movements on the part of the listener.

It may be observed that the reproduced sound may be listened to in various ways, and that it is possible to perceive the sounds by applying the ear close to the reproducer itself.

In the modified form of reproducer shown in Fig. 15 the style 382 is made of a thin plate of sheet-steel—say three one-thousandths of an inch in thickness—of the form clearly shown, fastened on edge on the spring 359, being soldered in a slit in the ear 383, and a similar slit in the end of the metal button 384, which end projects through the spring 359. This button bears upon the hard-rubber diaphragm 362, and serves to communicate vibrations from the style to it.

In the form of reproducer shown in Fig. 17 the style 390 is interposed between the diaphragm 362 and the flat spring 391. Near each end the style has a rounded shoulder, and the ends themselves are of smaller diameter,

tions upon the diaphragm and style. The style then cuts a variable line, whose irregularities or inequalities correspond to the sound to be recorded. The spiral line can be omitted for a given distance, when desired, by simply lifting the recorder from the tablet. The feed-screw 334 should be so mounted as to prevent endwise movement, which would tend to make the traced line more or less zigzag. As shown, a spring, 342, (see Figs. 1 and 6,) presses constantly upon the left end of the screw to keep it against the bearing at the opposite end. The feed-screw is revolved by the friction-wheels. (Shown in Figs. 1, 2, and 5.) In recording, the friction-pinion 343 on the tablet-holder communicates motion to the large wheel 344, fast on the feed-screw, through the intermediate 345. Thus the feed-screw has a much slower rotation than the tablet-holder, and the convolutions of the line traced on the tablet are much closer together than the threads of the feed-screw. The intermediate 345 is mounted on the stud 346, (see Fig. 5,) which is carried by a hinged frame, so that the intermediate can be moved out of contact with the pinion whenever it is desired to stop the feed, without interrupting the rotation of the tablet-holder. The hinged frame consists of side bars, 347, which are hinged separably on the tie-rod 302, and are rigidly connected with each other by tie-bars 348 and 349. A spring, 350, under each side bar tends to lift the frame and press the intermediate 345 against the pinion 343. The feed-screw is therefore normally in engagement with the tablet-holder; but can be disengaged at will by pressing upon the tie-bar 348. The friction-wheels 351 and 352 are for reversing the revolution of the feed-screw. The wheel or pinion 352 is simply a hub on the side of the intermediate 345. The wheel 351 presses against the pinion 352, and is mounted on a stud at the end of bent lever 353, which turns upon the screw-stud 354 in line with the stud 346. (See Fig. 5.) The lever 353 thus turns about the axis of the wheel 352, and the wheel 351 may roll over the surface of the wheel 352, so as to be pressed against and thus engage the pinion 343 on the tablet-holder. The short arm of the bent lever is connected by a link, 355, with the stud 356, itself secured fast to the side piece, 300. When, therefore, the tie-bar 348 and side bars, 347, are depressed, the lever, as shown in Fig. 2, is turned to the left, and when it is sufficiently depressed the wheel 351 is held against and engaged by the pinion 343. Motion is now communicated through the wheels 343, 351, 352, 345, and 344, the rotation of the feed-screw is reversed, and a more rapid rotation is imparted to it. The carrier will therefore be moved backward (to the left in Fig. 1) more rapidly than it was advanced. There will ordinarily be not much occasion to use the stop and reversing mechanism in recording. It is for use in reproducing that it has been specially devised. The reproducer (see Fig. 1, 4, 11, 12, and 13) has a style, 357, welded or otherwise fastened to the end of a flexible strip, 358, of thin steel—say three one-thousandths ($\frac{3}{1000}$) of an inch in thickness—so as to project beyond both edges of the same like a hammer-head. The outer end of this style (which should be somewhat more tapering at the point than the recording-style) rubs over the record or tablet. The inner end presses upon a light flat spring, 359, fastened at the lower end to the frame 360 of the reproducer. The strip 358 is soldered into a slit of the ear 361, on the spring, which by bending between the ear 361, and where it is attached to the frame 360 allows the style and strip to be moved in or out, and thus serves to hinge the same to the said frame. The diaphragm 362, of hard rubber about seven one-thousandths ($\frac{7}{1000}$) of an inch in thickness, is pressed against a conical seat in the face of the frame 360 by means of the spring 359, between which and said diaphragm is a little block, 363, of cork. It serves the double function of pressing the diaphragm against its seat, and also of communicating vibrations to it. Cork is used because it is light and conveys vibrations well and has sufficient friction upon the diaphragm and spring to remain in the position in which it may be placed. By leaving it to be held by friction it can be adjusted by the user to give the best effects; but it can be secured by cement or otherwise in the position which the maker or adjuster of the instrument may determine. Preferably it occupies a position intermediate the style 357 and the edge of the diaphragm, as shown; but it can be set directly opposite the style. In the former position there is a certain length of the spring 359 beyond the cork, which length forms a tongue with a very high rate of normal vibration. It absorbs a considerable portion of the small vibrations which produce scratching noises, and it thus makes the articulation more distinct. It also reduces somewhat the loudness of the sounds reproduced, but the increased distinctness more than compensates for any loss in loudness.

Another effect which the tongue has is to return the style more perfectly when it has been pushed out by an elevation on the record. It does this because its normal vibration is quicker than that of the diaphragm or because its amplitude of vibration is larger, or for both reasons. It will be understood that this spring-tongue is compressed by the weight of the reproducer, which is sustained by the style. This weight is actually very small, the frame being made, for lightness, of hard rubber, but in comparison with the strength of the spring-tongue it is considerable. It will be observed that the diaphragm is strained by the spring in addition to the strain due to the weight of the reproducer. The inner end of the style 357 preferably rests in a hole or recess in the spring 359, so that it is prevented from side motion bodily, although capable of rocking on the inner end as a center. The bending of the strip 358 allows this side movement of the

front end of the style to take place with the greatest freedom. A bodily movement of the style sidewise could be permitted, if desired, but a stop should then be used to prevent it from being pushed off the spring 359.

To protect the style and other parts of the reproducer, a guard, 364, is fastened to the front of frame 360, and is perforated at the center for the passage of the style. On either side of the center it is bent outward to form horns to support the instrument when placed face downward on a table or flat surface.

The reproducer, consisting of the parts just described, is mounted upon a hollow standard, 365, which is hinged at the bottom to the carrier 366 by means of hollow trunnions 367, fitting in hollow uprights 368 on said carrier. The reproducer-standard 365 is provided with a thumb-piece, 369, which can be pressed to hold up the reproducer in placing the carrier on and removing it from the feed-screw 334. There are front and back screw-stops, 370 and 371, which limit the movement of the reproducer independently of the carrier. This latter is provided with a half-nut to rest upon and engage the feed-screw, the same as the carrier of the recorder. It is not provided with a guard to retain it on the feed-screw because it is considered unnecessary, particularly when a flexible sound-conveyer is employed, as will presently be described. It is provided with a tail or prolongation, 372, which rests upon the tie-bar 348, (see Fig. 4,) so that when this is depressed to stop or to reverse the feed-screw the carrier will turn to the left (the center of gravity being on that side of the feed-screw) and automatically lift the reproducing-style 357 from contact with the tablet 318, in or on which the record is formed. When the tie-bar 348 is released, the springs 350 raise it and turn the reproducer and its carrier to the right, so that the style again makes contact with the record. It will be observed that the pressure of the springs 350 does not force the style against the record, because the reproducer is hinged to its carrier and only its very light weight comes upon the reproducing-style and the record. On the carrier is a brush, 373, which, when the producer is in action, bears upon the record and clears it of dust or shavings of wax or other lightly-adhering matter in advance of the reproducing-style.

The hollow standard 365 serves to convey sound from the lenticular chamber behind the diaphragm into the uprights 368, with the interior of which the coupling 374 communicates. To this coupling a flexible sound-conveyer, 375, is attached at one end, the other end being connected with an upright branch of the tube 304. Thus the sound is conveyed from the interior of the uprights 368 through the coupling 374 and sound-conveyer 375 and tube 304, the flexibility of said conveyer 375 permitting the traverse of the reproducer, as well as the turning of the carrier 366 on the feed-screw 334. The tube 304 communicates with tubes 376 and 377, one at each end of the machine. A hearing-tube is or may be attached to either or both tubes. Preferably the apparatus shown in Fig. 16 is employed. It consists of two elastic and flexible hollow branches, 378, each provided at the outer end with a cup, 379, attached by a ball-and-socket joint, and a flexible sound-conveying tube, 380, for connecting both branches with the tube 376 or 377. As shown, there is a hollow metal coupling, 381, at the free end of the flexible tube 380, of such exterior diameter as to fit snugly in the tube which is to receive it. (See Fig. 4.) This coupling is provided with a stop-cock, 387, which can be turned to cut off more or less sound if the reproduction be too loud. This diminution in loudness makes the scratching noises less distracting to a person with a sensitive ear.

In use the cups 379 are placed one over each ear of the listener, the ball-and-socket joint permitting the cup to adjust itself to his head, and the elasticity of the branches 378 drawing them with sufficient pressure to support the apparatus.

The branches may be made of hard vulcanized rubber, in order to secure the requisite flexibility and elasticity; but it is evident that sound-conveying branches having these qualities could be constructed of various materials and in various ways.

Instead of applying the tube 380 to the tube 376 or 377, it may be connected directly with the coupling 374, the sound-conveyer 375 being omitted. This has the advantage of diminishing the length of tube between the reproducer and the ear of the listener, but is open to the objection that the reproducer is liable to be pulled from the machine by incautious movements on the part of the listener.

It may be observed that the reproduced sound may be listened to in various ways, and that it is possible to perceive the sounds by applying the ear close to the reproducer itself.

In the modified form of reproducer shown in Fig. 15 the style 382 is made of a thin plate of sheet-steel—say three one-thousandths of an inch in thickness—of the form clearly shown, fastened on edge on the spring 359, being soldered in a slit in the ear 383, and a similar slit in the end of the metal button 384, which end projects through the spring 359. This button bears upon the hard-rubber diaphragm 362, and serves to communicate vibrations from the style to it.

In the form of reproducer shown in Fig. 17 the style 390 is interposed between the diaphragm 362 and the flat spring 391. Near each end the style has a rounded shoulder, and the ends themselves are of smaller diameter, so that they may pass through holes in the diaphragm and spring, as shown, the latter pressing upon the shoulders. The spring 391, whose flat side is toward the diaphragm, is attached to the strip 392, which is soldered or otherwise fastened to the post 393. The spring

391 retains the outer or operating end of the style in place while allowing it freedom to move endwise for impressing vibrations upon the diaphragm. Preferably it exerts a light pressure inward, tending to strain the diaphragm, as well as maintain itself in contact with the shoulder on the style. It supplies the place of spring 359 of Figs. 11 and 15. The strip 392, whose edge is turned toward the diaphragm, allows the operating end of the style to move sidewise. It thus supplies the place of strip 358 of Fig. 11, and that which forms the style 382 of Fig. 15.

The construction of Fig. 17 has the advantage over the other forms that there is less material to be moved by the vibrations of the style.

The parts 391 and 392 can most conveniently be made from a round wire by filing the same flat at proper points.

The operation of the machine has practically been explained in the foregoing description in connection with the several parts of the machine, but an explanation will now be given of the operation as a whole. Having prepared a hollow paper cylinder and coated it with the paraffine and beeswax composition, the coated cylinder 318 (which forms the recording-tablet) is placed upon the tablet-holder 305, which for that purpose is detached at one end by releasing the catch 311, and tipped up, as indicated in dotted lines in Fig. 5. The detached end of the tablet-holder is then returned to its bearings in side piece, 301. Having adjusted the rest 329 of the recorder so that the recording-style 326 projects beyond the enlargement 332 the desired distance—say five one-thousandths ($\frac{5}{1000}$) of an inch—the recorder-carrier 333 is placed on the feed-screw 334, near the left end of the same, the guard-block 335 is turned under the screw, and the recorder is made to rest against the recording-tablet, the weight being supported by the rest 329, and the style 326 penetrating the wax coating. The fly-wheel 317 is then turned, revolving the tablet-holder and tablet, and also, but at a less speed, the feed-screw 334. Since the recorder is moved lengthwise of the tablet as the latter is revolved under it, the recording-style traces, or more specifically cuts, in the wax coating a spiral groove whose convolutions are closer together than the threads of the feed-screw. The convolutions may be eight one-thousandths ($\frac{8}{1000}$) of an inch apart. To make a speech record in or on the tablet, the speaker places the lower part of his face in the mouth-piece 338 and says in a clear and moderately loud voice the words to be recorded, the fly-wheel being kept in motion at a uniform speed of say one hundred and sixty revolutions per minute. If it be desired to mark visibly a paragraph on the record, it can be done by lifting the recorder for a short time from the record, then releasing the piece 338 and tube 339 are taken up by the diaphragm 320 and style 326, and the latter cuts a groove in the tablet, which is correspondingly irregular. After the record has been cut over the whole tablet, or over as much as may be desired, the recorder is removed. The tablet is also removed and brushed to remove the wax shavings, and then, or at some future time, is replaced on the tablet-holder of the same or of a similar machine. The reproducer-carrier 366 is placed on the feed-screw 334, the tail 372 resting on the tie-bar 348. The thumb-piece 369 of the reproducer-standard is pressed upon to keep the style 357 or 382 from contact with the record until the carrier has been placed on the screw. It is then released, and the reproducer, falling forward, brings the style into contact with the record. Preferably the grooves are so close together that the ridge between them tapers to an edge on top, so that no matter where the reproducer may be placed the style will enter a groove, and being free to move sidewise will, owing to the sloping sides of the groove, penetrate to the bottom thereof under the action of gravity. The fly wheel being turned at about the speed used in recording, the reproducer will follow the spiral groove cut by the recorder, and will be acted upon by the inequalities or irregularities of the record, and made to reproduce sounds or sonorous vibrations similar to those which acted upon the recorder to produce said inequalities or irregularities in the groove. Each elevation as it passes under the style at first presses the latter outward, and, when the top of the elevation is reached, allows it to be returned inward by the tension of the diaphragm and spring, or of the diaphragm alone. By these alternating movements, repeated for each ascent and descent in the record, and corresponding in extent and rapidity with the length and slope of the ascent and descent, the diaphragm is thrown into vibrations corresponding in form to the sonorous vibrations which caused the irregularities or inequalities. In addition to these vibrations, foreign vibrations, due to various causes, are also impressed upon the diaphragm. These should be disregarded, as far as possible, by the listener confining his attention to the speech-vibrations. They will (in the reproducer shown in Figs. 11 and 12) be measurably taken up by the vibration independently of the diaphragm 362 of the tongue formed by the end of the spring 359, which projects beyond the block 363.

In certain speech-sounds it is found that the diaphragm responds too sluggishly, and that in consequence of this sluggishness the style, if influenced by the diaphragm alone, will not descend to the bottom of a depression in the groove, but will skip across, thus cutting off more or less of the vibration. The tongue of the spring 359 responds more readily than the

ishing the loudness of the reproduced sound; but any loss in this respect will be more than balanced by the improvement in distinctness. The vibrations of the diaphragm being impressed upon the air in the chamber behind the same are conveyed through the standard 365, the uprights 368, the coupling 374, the flexible tube 375, the tube 304, the tube 376 or 377, the tube 380, and the branches 378 to the ears of the listener. Should it be desired to interrupt the reproduction for a time, the tie-bar 348 is pressed lightly, thereby withdrawing the intermediate 345 from contact with the pinion 343 and stopping the rotation of the feed-screw 334. At the same time the reproducer-carrier 366 is allowed by the depression of the tie-bar to turn sufficiently to lift the reproducer-style 357 clear of the record, the front stop, 370, coming in contact with the standard 365 and raising the same. Should one or more words, phrases, or sentences not be understood, the tie-bar 348 is pressed more strongly, so as to bring the wheel 351 into engagement with the pinion 343, and thereby reverse the rotation of the feed-screw. When the reproducer has been carried back beyond the part of the record from which the reproduction was not understood, the tie-bar 348 is released, the style again comes into contact with the record, and the reproduction commences at the point to which the reproducer has been brought back. This repetition of what is not understood can be made as often as desired.

Friction-wheels for communicating motion to the feed screw are preferred to cog or other toothed gearing, (which could of course be used without departing from the invention,) notwithstanding their liability to slip, because they run smoother and are more easily engaged and disengaged. A slip between the wheels causes the reproducer to be fed faster or slower than the spiral on the tablet permits the style to advance. As a general thing, there is more slip in recording than in reproducing, and consequently the reproducer outruns the style slightly. The style should be given enough side play to compensate for this difference in speed; but if not given the only difficulty is that the style will at length slip across the ridge between the grooves, and thus escape the action of a portion of the record, so that it may be necessary to bring back the reproducer by reversing the feed. The loudness of the reproduction is limited as desired by turning the stop-cock 387 to the desired extent.

In the foregoing description of the machine shown in the drawings, dimensions, proportions, materials, and other details of construction are mentioned with particularity for the purpose of enabling others more readily to make and use the new improvements, and not as limitations of the said improvements, since

The terms "recorder" and "reproducer" as used herein include simply means (a style, for example) for acting upon a tablet to form a sound-record, or being acted upon by a sound-record, in connection with means whereby sonorous vibrations can be impressed upon the recording-style or its substitute, or can be received from the reproducing-style or its substitute, and such frame or support as may be necessary to an operative device. As hereinafter employed, they mean a recorder or reproducer of any ordinary or suitable description unless a special form is mentioned, or is necessarily implied from the connection in which the recorder or reproducer is used. For example, some forms of recorder and reproducer would not be suitable for use with a wax-coated tablet. In like manner other terms—such as "tablet," "tablet-holder," "carrier," "sound-conveyer," "gearing," &c.—refer to devices of any ordinary or suitable description, except as otherwise indicated.

The present invention is to be considered as an improvement upon or modification of what is shown and described in the application for Letters Patent of C. A. Bell and myself, filed June 27, 1885, and officially numbered 170,044, so far as they relate to common features, and no claim is made herein to any matter described and shown in that application.

Having now fully described my said invention and the manner in which the same is or may be carried into effect, what I claim is—

1. A recording-tablet for a phonograph, consisting of a hollow cylinder provided with a wax or wax-like coating for receiving the sound-record, substantially as described.

2. A recording-tablet consisting of a hollow cylinder of paper provided with a wax or wax-like coating, substantially as described.

3. The recording-tablet consisting of a hollow paper cylinder coated with a composition of beeswax and paraffine, substantially as described.

4. A tubular self-sustaining tablet for recording sounds or sonorous vibrations, substantially as described.

5. In a phonograph and in combination with a sound recorder or reproducer and operating mechanism for causing the said recorder or reproducer to trace a spiral line on the tablet, an elongated cylindrical tablet-holder supported and journaled so that the tubular tablet can be placed on the same, substantially as described.

6. The combination, with a tubular tablet, of the tablet-holder for supporting and rotating the same, substantially as described.

7. A tablet-holder journaled in bearings at both ends and detachable from its support at least at one end, so that a tubular tablet can be slipped over the same, in combination with a

391 retains the outer or operating end of the style in place while allowing it freedom to move endwise for impressing vibrations upon the diaphragm. Preferably it exerts a light pressure inward, tending to strain the diaphragm, as well as maintain itself in contact with the shoulder on the style. It supplies the place of spring 359 of Figs. 11 and 15. The strip 392, whose edge is turned toward the diaphragm, allows the operating end of the style to move sidewise. It thus supplies the place of strip 358 of Fig. 11, and that which forms the style 382 of Fig. 15.

The construction of Fig. 17 has the advantage over the other forms that there is less material to be moved by the vibrations of the style.

The parts 391 and 392 can most conveniently be made from a round wire by filing the same flat at proper points.

The operation of the machine has practically been explained in the foregoing description in connection with the several parts of the machine, but an explanation will now be given of the operation as a whole. Having prepared a hollow paper cylinder and coated it with the paraffine and beeswax composition, the coated cylinder 318 (which forms the recording-tablet) is placed upon the tablet-holder 305, which for that purpose is detached at one end by releasing the catch 311, and tipped up, as indicated in dotted lines in Fig. 5. The detached end of the tablet-holder is then returned to its bearings in side piece, 301. Having adjusted the rest 329 of the recorder so that the recording-style 326 projects beyond the enlargement 332 the desired distance—say five one thousandths ($\frac{5}{1000}$) of an inch—the recorder-carrier 333 is placed on the feed-screw 334, near the left end of the same, the guard-block 335 is turned under the screw, and the recorder is made to rest against the recording-tablet, the weight being supported by the rest 329, and the style 326 penetrating the wax coating. The fly-wheel 317 is then turned, revolving the tablet-holder and tablet, and also, but at a less speed, the feed-screw 334. Since the recorder is moved lengthwise of the tablet as the latter is revolved under it, the recording-style traces, or more specifically cuts, in the wax coating a spiral groove whose convolutions are closer together than the threads of the feed-screw. The convolutions may be eight one-thousandths ($\frac{8}{1000}$) of an inch apart. To make a speech record in or on the tablet, the speaker places the lower part of his face in the mouth-piece 338 and says in a clear and moderately loud voice the words to be recorded, the fly-wheel being kept in motion at a uniform speed of say one hundred and sixty revolutions per minute. If it be desired to mark visibly a paragraph on the record, it can be done by lifting the recorder for a short time from the record, then releasing it, and again speaking into the mouth-piece. The sonorous vibrations which the speaker impresses upon the air in the mouth-piece 338 and tube 339 are taken up by the diaphragm 320 and style 326, and the latter cuts a groove in the tablet, which is correspondingly irregular. After the record has been cut over the whole tablet, or over as much as may be desired, the recorder is removed. The tablet is also removed and brushed to remove the wax shavings, and then, or at some future time, is replaced on the tablet-holder of the same or of a similar machine. The reproducer-carrier 366 is placed on the feed-screw 334, the tail 372 resting on the tie-bar 348. The thumb-piece 369 of the reproducer-standard is pressed upon to keep the style 357 or 382 from contact with the record until the carrier has been placed on the screw. It is then released, and the reproducer, falling forward, brings the style into contact with the record. Preferably the grooves are so close together that the ridge between them tapers to an edge on top, so that no matter where the reproducer may be placed the style will enter a groove, and being free to move sidewise will, owing to the sloping sides of the groove, penetrate to the bottom thereof under the action of gravity. The fly wheel being turned at about the speed used in recording, the reproducer will follow the spiral groove cut by the recorder, and will be acted upon by the inequalities or irregularities of the record, and made to reproduce sounds or sonorous vibrations similar to those which acted upon the recorder to produce said inequalities or irregularities in the groove. Each elevation as it passes under the style at first presses the latter outward, and, when the top of the elevation is reached, allows it to be returned inward by the tension of the diaphragm and spring, or of the diaphragm alone. By these alternating movements, repeated for each ascent and descent in the record, and corresponding in extent and rapidity with the length and slope of the ascent and descent, the diaphragm is thrown into vibrations corresponding in form to the sonorous vibrations which caused the irregularities or inequalities. In addition to these vibrations, foreign vibrations, due to various causes, are also impressed upon the diaphragm. These should be disregarded, as far as possible, by the listener confining his attention to the speech-vibrations. They will (in the reproducer shown in Figs. 11 and 12) be measurably taken up by the vibration independently of the diaphragm 362 of the tongue formed by the end of the spring 359, which projects beyond the block 363.

In certain speech-sounds it is found that the diaphragm responds too sluggishly, and that in consequence of this sluggishness the style, if influenced by the diaphragm alone, will not descend to the bottom of a depression in the groove, but will skip across, thus cutting off more or less of the vibration. The tongue of the spring 359 responds more readily than the diaphragm and diminishes the danger of false vibrations. This spring-tongue also absorbs a portion of the speech-vibrations, thus dimin-

ishing the loudness of the reproduced sound; but any loss in this respect will be more than balanced by the improvement in distinctness. The vibrations of the diaphragm being impressed upon the air in the chamber behind the same are conveyed through the standard 365, the uprights 368, the coupling 374, the flexible tube 375, the tube 304, the tube 376 or 377, the tube 380, and the branches 378 to the ears of the listener. Should it be desired to interrupt the reproduction for a time, the tie bar 348 is pressed lightly, thereby withdrawing the intermediate 345 from contact with the pinion 343 and stopping the rotation of the feed-screw 334. At the same time the reproducer-carrier 366 is allowed by the depression of the tie-bar to turn sufficiently to lift the reproducer-style 357 clear of the record, the front stop, 370, coming in contact with the standard 365 and raising the same. Should one or more words, phrases, or sentences not be understood, the tie-bar 348 is pressed more strongly, so as to bring the wheel 351 into engagement with the pinion 343, and thereby reverse the rotation of the feed screw. When the reproducer has been carried back beyond the part of the record from which the reproduction was not understood, the tie-bar 348 is released, the style again comes into contact with the record, and the reproduction commences at the point to which the reproducer has been brought back. This repetition of what is not understood can be made as often as desired.

Friction wheels for communicating motion to the feed screw are preferred to cog or other toothed gearing, (which could of course be used without departing from the invention,) notwithstanding their liability to slip, because they run smoother and are more easily engaged and disengaged. A slip between the wheels causes the reproducer to be fed faster or slower than the spiral on the tablet permits the style to advance. As a general thing, there is more slip in recording than in reproducing, and consequently the reproducer outruns the style slightly. The style should be given enough side play to compensate for this difference in speed; but if not given the only difficulty is that the style will at length slip across the ridge between the grooves, and thus escape the action of a portion of the record, so that it may be necessary to bring back the reproducer by reversing the feed. The loudness of the reproduction is limited as desired by turning the stop-cock 387 to the desired extent.

In the foregoing description of the machine shown in the drawings, dimensions, proportions, materials, and other details of construction are mentioned with particularity for the purpose of enabling others more readily to make and use the new improvements, and not as limitations of the said improvements, since it is obvious that modifications can be made in details without departing from the spirit of the invention, and that parts of the invention can be used separately.

The terms "recorder" and "reproducer" as used herein include simply means (a style, for example) for acting upon a tablet to form a sound-record, or being acted upon by a sound-record, in connection with means whereby sonorous vibrations can be impressed upon the recording-style or its substitute, or can be received from the reproducing-style or its substitute, and such frame or support as may be necessary to an operative device. As hereinafter employed, they mean a recorder or reproducer of any ordinary or suitable description unless a special form is mentioned, or is necessarily implied from the connection in which the recorder or reproducer is used. For example, some forms of recorder and reproducer would not be suitable for use with a wax-coated tablet. In like manner other terms—such as "tablet," "tablet-holder," "carrier," "sound-conveyer," "gearing," &c.—refer to devices of any ordinary or suitable description, except as otherwise indicated.

The present invention is to be considered as an improvement upon or modification of what is shown and described in the application for Letters Patent of C. A. Bell and myself, filed June 27, 1885, and officially numbered 170,044, so far as they relate to common features, and no claim is made herein to any matter described and shown in that application.

Having now fully described my said invention and the manner in which the same is or may be carried into effect, what I claim is—

1. A recording-tablet for a phonograph, consisting of a hollow cylinder provided with a wax or wax-like coating for receiving the sound-record, substantially as described.

2. A recording-tablet consisting of a hollow cylinder of paper provided with a wax or wax-like coating, substantially as described.

3. The recording tablet consisting of a hollow paper cylinder coated with a composition of beeswax and paraffine, substantially as described.

4. A tubular self-sustaining tablet for recording sounds or sonorous vibrations, substantially as described.

5. In a phonograph and in combination with a sound recorder or reproducer and operating mechanism for causing the said recorder or reproducer to trace a spiral line on the tablet, an elongated cylindrical tablet-holder supported and journaled so that the tubular tablet can be placed on the same, substantially as described.

6. The combination, with a tubular tablet, of the tablet-holder for supporting and rotating the same, substantially as described.

7. A tablet-holder journaled in bearings at both ends and detachable from its support at least at one end, so that a tubular tablet can be slipped over the same, in combination with a sound recorder or reproducer, and operating mechanism for causing the said recorder or reproducer to trace a spiral line on the tablet, substantially as described.

798

8. A tablet-holder detachably connected with its support at one end and provided at the other end with a ball-and-socket bearing, or bearing which permits the said holder to be tilted for placing a tubular tablet on the same, in combination with a sound recorder or reproducer and operating mechanism for causing said recorder or reproducer to trace a spiral line on the tablet, substantially as described.

9. The combination, with the tablet-holder, the side piece or support at one end of the same, and the cap therefor, of the catch or fastening for said cap and the spring for moving the tablet-holder when the catch is released, substantially as described.

10. The combination, with the tablet holder and the ball-and-socket bearing or bearing for permitting the holder to be tilted, of the support and cap at the opposite end of said holder, the catch or fastening for said cap, and the spring lifting the journal from said support when the catch or fastening is released, substantially as described.

11. The combination, with the tablet-holder, of the box or sleeve on one journal of the same, the support and cap forming the bearing for said box or sleeve, and the catch or fastening for the cap, substantially as described.

12. The combination, with the tablet holder, of the box or sleeve held on one journal of the same, the support and cap forming a bearing for said box or sleeve, and the spring whose pressure acts against said box or sleeve, substantially as described.

13. The combination, with the tablet-holder, of the ball-journal and socket-bearing at one end of said holder, the box or sleeve on the journal at the opposite end of said holder, and the bearing for the same, substantially as described.

14. The combination, with the tablet-holder, the sound-recorder, and the feed-screw, of gearing between said holder and feed-screw for revolving the latter at a slower speed than the former, substantially as described.

15. The combination, with the tablet-holder, sound recorder or reproducer, feed-screw, and gearing for revolving the screw, of the carrier for the recorder or reproducer provided with a divided or partial nut for engaging said screw, substantially as described.

16. The combination, with the feed-screw and the carrier for engaging the same, of the movable guard for retaining the carrier in engagement with the screw, substantially as described.

17. The combination, with a feed-screw and a sound recorder or reproducer, of the carrier for the sound recorder or reproducer engaged and also supported by said screw, substantially as described.

18. The combination, with a feed-screw and capable of turning on the same as on a journal, substantially as described.

19. The combination, with a tablet and a tablet-holder, of the feed-screw, a carrier mounted on said screw, and the recorder supported on said carrier and resting against the tablet, substantially as described.

20. The combination, with the tablet-holder, feed-screw, and gearing between the same, of the hinged frame upheld by spring-pressure and the devices connected therewith for putting the feed-screw out of action when the said frame is depressed, substantially as described.

21. The combination, with a tablet-holder, feed-screw, and gearing between the two, of the hinged frame upheld by spring-pressure and reversing mechanism connected with said frame for reversing the rotation of the feed-screw relatively to the rotation of the tablet-holder, substantially as described.

22. The combination, with a tablet-holder, a feed-screw, gearing, and an instrument—the reproducer, for example—engaged by said screw, of stop mechanism for putting the feed-screw out of action and at the same time lifting the instrument clear of the tablet, substantially as described.

23. The combination, with a tablet, a tablet-holder, a feed-screw, gearing, and an instrument—the reproducer, for example—engaged by said screw, of reversing mechanism for reversing the rotation of the feed-screw, the said mechanism being connected with said instrument, so that the latter will be lifted clear of the tablet on the reversal of the feed-screw, substantially as described.

24. The combination, with the tablet and the recorder held against the same by yielding pressure, of a rest bearing on said tablet for supporting the recorder, substantially as described.

25. The combination, with the recorder frame and style and the means whereby sonorous vibrations are impressed upon the style, of the rest attached to said frame and arranged close to said style, the latter projecting beyond the rest to act upon the recording-tablet, substantially as described.

26. The combination, with the recorder, of the adjustable rest attached to said recorder for bearing upon the recording-tablet, substantially as described.

27. The combination, with the recording-style, the recorder-frame, and the means whereby vibrations are impressed upon the style, of the rest attached to said frame and adjustable lengthwise of said style, substantially as described.

28. The combination, with the recorder-frame and the rest attached thereto, of the diaphragm and the recording-style mounted directly on said diaphragm, substantially as described.

phragm so as to vibrate with the same, substantially as described.

30. The combination, with the diaphragm, of the cutting-style provided with a screw-threaded shank, and the nut and washer for securing the same to the diaphragm, substantially as described.

31. The combination, with a recorder having a cutting-style, of the rest for bearing upon the recording-tablet, substantially as described.

32. The combination, with the tablet having a wax or wax-like coating to receive the record, of the recorder pressed toward the tablet by yielding pressure and provided with a cutting style and the rest for bearing upon the tablet and supporting said pressure, substantially as described.

33. The combination, with the recorder, of the sound-concentrator comprising a flaring mouth-piece and a tapering tube forming a continuation of the same, substantially as described.

34. The combination, with the recorder, of the sound-concentrator comprising a mouth-piece of elliptical form and a tapering tube forming a continuation of the same, substantially as described.

35. The combination, with the reproducer, of the brush for clearing the record in advance of the reproducer, substantially as described.

36. The combination, with the recording-tablet having a wax or wax-like coating in which the record is cut, of the reproducer and the brush for clearing the record in advance of the reproducer, substantially as described.

37. A recording-tablet consisting of a hollow cylinder provided with a wax or wax-like coating and having a sound-record cut in said coating, substantially as described.

38. The combination, with the tablet and tablet-holder, of the feed-screw, the gearing, the reproducer-carrier, and the brush, substantially as described.

39. A reproducer having a flexible or flexibly-mounted style movable sidewise independently of the diaphragm or device to which the style communicates vibration, substantially as described.

40. A reproducer having the style attached to or in one piece with a comparatively broad and thin strip placed on edge, said style in consequence of the flexibility of said strip being movable sidewise independently of the diaphragm or device to which the style communicates vibration, but in consequence of the breadth of said strip being practically rigid to pressures in other directions, substantially as described.

41. The combination, with the reproducer-style and diaphragm or device to which said style is to communicate vibrations, of a comparatively broad and thin strip placed on edge and attached to or in one piece with said style, said style being [illegible] thin metal strip breadthwise of the same like a hammer-head, substantially as described.

43. The reproducer-style attached to or in one piece with a broad and thin strip, in combination with a diaphragm or device upon which the reproduced sonorous vibrations are to be impressed and a spring carrying said style and strip, and serving as a hinge to permit them to vibrate, substantially as described.

44. The combination, with the reproducer-style and the diaphragm or device upon which the reproduced sonorous vibrations are to be impressed by said style, of a flat metal spring interposed between the style and diaphragm and forming a yielding connection, through which the reproduced vibrations are transmitted, said spring having a practically rigid connection with the diaphragm, substantially as described.

45. The combination, with the reproducer-style and the diaphragm or device upon which the reproduced vibrations are to be impressed by said style, of a metal spring or spring-tongue whose normal vibration is quicker than that of said diaphragm, and whose tension tends to move the style away from the diaphragm, substantially as described.

46. In combination with a diaphragm, a frame having a concave seat for said diaphragm, the walls of said seat converging to an opening in the back, through which the sound may escape, substantially as described.

47. The combination, with the diaphragm and the frame having a concave seat for said diaphragm, of a spring for holding the diaphragm to its seat and for straining the same, substantially as described.

48. The combination, with the diaphragm, its supporting-frame, and the style, of the spring for straining said diaphragm, substantially as described.

49. The combination, with the diaphragm and its supporting-frame, of the spring pressing inward on said diaphragm and the style carried by said spring, substantially as described.

50. The combination, with the diaphragm and its frame, of the spring projecting over said diaphragm, the block between the spring and diaphragm, and the style bearing upon the spring beyond said block, substantially as described.

51. The combination, with the reproducer-style, of the hard-rubber diaphragm and the frame for supporting said diaphragm at the edges, substantially as described.

52. The combination, with a diaphragm and its frame, of a spring projecting over said diaphragm, a style carried by said spring, and a block between the diaphragm and spring, adjustable lengthwise of the latter, substantially as described.

53. The combination, with the reproducer-

8. A tablet-holder detachably connected with its support at one end and provided at the other end with a ball-and-socket bearing, or bearing which permits the said holder to be tilted for placing a tubular tablet on the same, in combination with a sound recorder or reproducer and operating mechanism for causing said recorder or reproducer to trace a spiral line on the tablet, substantially as described.

9. The combination, with the tablet-holder, the side piece or support at one end of the same, and the cap therefor, of the catch or fastening for said cap and the spring for moving the tablet-holder when the catch is released, substantially as described.

10. The combination, with the tablet holder and the ball-and-socket bearing or bearing for permitting the holder to be tilted, of the support and cap at the opposite end of said holder, the catch or fastening for said cap, and the spring lifting the journal from said support when the catch or fastening is released, substantially as described.

11. The combination, with the tablet-holder, of the box or sleeve on one journal of the same, the support and cap forming the bearing for said box or sleeve, and the catch or fastening for the cap, substantially as described.

12. The combination, with the tablet holder, of the box or sleeve held on one journal of the same, the support and cap forming a bearing for said box or sleeve, and the spring whose pressure acts against said box or sleeve, substantially as described.

13. The combination, with the tablet-holder, of the ball-journal and socket-bearing at one end of said holder, the box or sleeve on the journal at the opposite end of said holder, and the bearing for the same, substantially as described.

14. The combination, with the tablet-holder, the sound-recorder, and the feed-screw, of gearing between said holder and feed-screw for revolving the latter at a slower speed than the former, substantially as described.

15. The combination, with the tablet-holder, sound recorder or reproducer, feed-screw, and gearing for revolving the screw, of the carrier for the recorder or reproducer provided with a divided or partial nut for engaging said screw, substantially as described.

16. The combination, with the feed-screw and the carrier for engaging the same, of the movable guard for retaining the carrier in engagement with the screw, substantially as described.

17. The combination, with a feed-screw and a sound recorder or reproducer, of the carrier for the sound recorder or reproducer engaged and also supported by said screw, substantially as described.

18. The combination, with a feed-screw and a sound recorder or reproducer, of the carrier for the recorder or reproducer movable lengthwise of and engaged by said screw and capable of turning on the same as on a journal, substantially as described.

19. The combination, with a tablet and a tablet-holder, of the feed-screw, a carrier mounted on said screw, and the recorder supported on said carrier and resting against the tablet, substantially as described.

20. The combination, with the tablet-holder, feed-screw, and gearing between the same, of the hinged frame upheld by spring-pressure and the devices connected therewith for putting the feed-screw out of action when the said frame is depressed, substantially as described.

21. The combination, with a tablet-holder, feed-screw, and gearing between the two, of the hinged frame upheld by spring-pressure and reversing mechanism connected with said frame for reversing the rotation of the feed-screw relatively to the rotation of the tablet-holder, substantially as described.

22. The combination, with a tablet-holder, a feed-screw, gearing, and an instrument—the reproducer, for example—engaged by said screw, of stop mechanism for putting the feed-screw out of action and at the same time lifting the instrument clear of the tablet, substantially as described.

23. The combination, with a tablet, a tablet-holder, a feed-screw, gearing, and an instrument—the reproducer, for example—engaged by said screw, of reversing mechanism for reversing the rotation of the feed-screw, the said mechanism being connected with said instrument, so that the latter will be lifted clear of the tablet on the reversal of the feed-screw, substantially as described.

24. The combination, with the tablet and the recorder held against the same by yielding pressure, of a rest bearing on said tablet for supporting the recorder, substantially as described.

25. The combination, with the recorder-frame and style and the means whereby sonorous vibrations are impressed upon the style, of the rest attached to said frame and arranged close to said style, the latter projecting beyond the rest to act upon the recording-tablet, substantially as described.

26. The combination, with the recorder, of the adjustable rest attached to said recorder for bearing upon the recording-tablet, substantially as described.

27. The combination, with the recording-style, the recorder-frame, and the means whereby vibrations are impressed upon the style, of the rest attached to said frame and adjustable lengthwise of said style, substantially as described.

28. The combination, with the recorder-frame and the rest attached thereto, of the diaphragm and the recording-style mounted directly on said diaphragm, substantially as described.

29. The combination, with the diaphragm, of the cutting-style formed of a wire sharpened at its outer end and carried by said dia-

phragm so as to vibrate with the same, substantially as described.

30. The combination, with the diaphragm, of the cutting-style provided with a screw-threaded shank, and the nut and washer for securing the same to the diaphragm, substantially as described.

31. The combination, with a recorder having a cutting-style, of the rest for bearing upon the recording-tablet, substantially as described.

32. The combination, with the tablet having a wax or wax-like coating to receive the record, of the recorder pressed toward the tablet by yielding pressure and provided with a cutting-style and the rest for bearing upon the tablet and supporting said pressure, substantially as described.

33. The combination, with the recorder, of the sound-concentrator comprising a flaring mouth-piece and a tapering tube forming a continuation of the same, substantially as described.

34. The combination, with the recorder, of the sound-concentrator comprising a mouth-piece of elliptical form and a tapering tube forming a continuation of the same, substantially as described.

35. The combination, with the reproducer, of the brush for clearing the record in advance of the reproducer, substantially as described.

36. The combination, with the recording-tablet having a wax or wax-like coating in which the record is cut, of the reproducer and the brush for clearing the record in advance of the reproducer, substantially as described.

37. A recording-tablet consisting of a hollow cylinder provided with a wax or wax-like coating and having a sound-record cut in said coating, substantially as described.

38. The combination, with the tablet and tablet-holder, of the feed-screw, the gearing, the reproducer-carrier, and the brush, substantially as described.

39. A reproducer having a flexible or flexibly-mounted style movable sidewise independently of the diaphragm or device to which the style communicates vibration, substantially as described.

40. A reproducer having the style attached to or in one piece with a comparatively broad and thin strip placed on edge, said style in consequence of the flexibility of said strip being movable sidewise independently of the diaphragm or device to which the style communicates vibration, but in consequence of the breadth of said strip being practically rigid to pressures in other directions, substantially as described.

41. The combination, with the reproducer-style and diaphragm or device to which said style is to communicate vibrations, of a comparatively broad and thin strip placed on edge and attached to or in one piece with said style, said strip being hinged to the frame, so that the style may be vibrated in the plane of said strip, substantially as described.

42. In a reproducer, the style attached to a thin metal strip breadthwise of the same like a hammer-head, substantially as described.

43. The reproducer-style attached to or in one piece with a broad and thin strip, in combination with a diaphragm or device upon which the reproduced sonorous vibrations are to be impressed and a spring carrying said style and strip, and serving as a hinge to permit them to vibrate, substantially as described.

44. The combination, with the reproducer-style and the diaphragm or device upon which the reproduced sonorous vibrations are to be impressed by said style, of a flat metal spring interposed between the style and diaphragm and forming a yielding connection, through which the reproduced vibrations are transmitted, said spring having a practically rigid connection with the diaphragm, substantially as described.

45. The combination, with the reproducer-style and the diaphragm or device upon which the reproduced vibrations are to be impressed by said style, of a metal spring or spring-tongue whose normal vibration is quicker than that of said diaphragm, and whose tension tends to move the style away from the diaphragm, substantially as described.

46. In combination with a diaphragm, a frame having a concave seat for said diaphragm, the walls of said seat converging to an opening in the back, through which the sound may escape, substantially as described.

47. The combination, with the diaphragm and the frame having a concave seat for said diaphragm, of a spring for holding the diaphragm to its seat and for straining the same, substantially as described.

48. The combination, with the diaphragm, its supporting-frame, and the style, of the spring for straining said diaphragm, substantially as described.

49. The combination, with the diaphragm and its supporting-frame, of the spring pressing inward on said diaphragm and the style carried by said spring, substantially as described.

50. The combination, with the diaphragm and its frame, of the spring projecting over said diaphragm, the block between the spring and diaphragm, and the style bearing upon the spring beyond said block, substantially as described.

51. The combination, with the reproducer-style, of the hard-rubber diaphragm and the frame for supporting said diaphragm at the edges, substantially as described.

52. The combination, with a diaphragm and its frame, of a spring projecting over said diaphragm, a style carried by said spring, and a block between the diaphragm and spring, adjustable lengthwise of the latter, substantially as described.

53. The combination, with the reproducer, of the guard fastened over the face of the same, substantially as described.

54. The reproducer provided with a guard fastened over the face of the same, and curved

to form horns upon which the reproducer may rest, substantially as described.

55. The double ear-piece, comprising the elastic and flexible hollow branches provided each with a cup connected with the branch by a ball-and-socket joint, substantially as described.

56. The combination, with the reproducer and the carrier therefor and the feed-screw for moving them, of a sound-conveying tube on the machine-frame and a flexible sound-conveyer between the reproducer and the said tube, substantially as described.

57. The combination, with the reproducer, of the double ear-piece comprising the elastic and flexible hollow branches and the cups jointed to the ends of said branches, substantially as described.

58. The combination, with the feed-screw and the reproducer-carrier supported and capable of turning on said screw, of the reproducer hinged to said carrier and a stop for lifting the reproducer when the carrier is turned in the proper direction, substantially as described.

59. The combination, with the feed-screw and the reproducer-carrier engaging and capable of turning on said screw and provided with an extension or tail, of a movable bar under said tail for upholding the same, so that by depressing said bar the carrier can be turned and lift the reproducer from the tablet, substantially as described.

60. The combination of the feed-screw, the reproducer-carrier mounted thereon and provided with an extension or tail, and the bar under said tail for upholding the same, substantially as described.

61. The combination, with the reproducer-carrier, of the reproducer mounted on a standard hinged to said carrier, said standard being provided with a thumb-piece or device, whereby the reproducer can be held up in placing the reproducer on and in removing it from the machine, substantially as described.

62. The combination, with the tablet, tablet-holder, feed-screw, gearing, reproducer, and reproducer-carrier, of the mechanism for controlling the rotation of said feed-screw, the same being connected with said carrier so as to lift the reproducer from the tablet when operated to stop or to reverse the rotation of said screw, substantially as described.

63. The combination, with the tablet-holder and the feed-screw, of the gearing for rotating the feed-screw in the forward direction, the hinged frame for disengaging said gearing when moved a certain distance, and additional wheels connected with said frame, so as by a further movement to engage said wheels and reverse the rotation of said screw, substantially as described.

64. The combination, with the sound recorder or reproducer, the tablet, the tablet-holder, the feed-screw, the gearing for rotating the same in a forward direction, the gearing for rotating the same backward at a greater speed, and mechanism for bringing the latter into action, substantially as described.

65. The combination, with the reproducer and a conveying-tube for the reproduced sounds, of a stop-cock in said tube for moderating at will the loudness of the sounds to be conveyed to the ear, substantially as described.

66. The herein-described improved recording and reproducing machine, comprising the following elements in combination: a hollow cylindrical self-sustaining tablet, a tablet-holder journaled and hinged at one end to the machine-frame and journaled and detachably connected with said frame at the other, a feed-screw, gearing for rotating the said screw in either direction according to the wheels engaged, a hinged frame for controlling the rotation of said screw, and the recording and reproducing instruments with their carriers, substantially as described.

In testimony whereof I have signed the foregoing specification in the presence of two subscribing witnesses.

SUMNER TAINTER.

Witnesses:
PHILIP MAURO,
C. J. HEDRICK.

802

(No Model.)

L. BOCK, Jr.

RECORDING AND REPRODUCING SOUND WAVES.

No. 364,472. Patented June 7, 1887.

Fig. 1

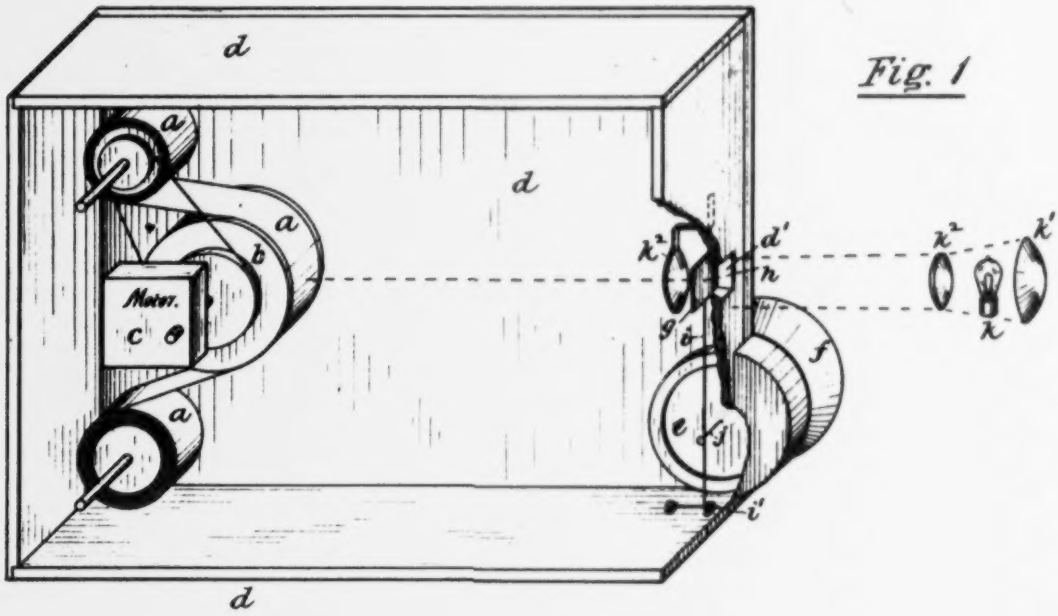

Fig. 2

Fig. 3

Fig. 4

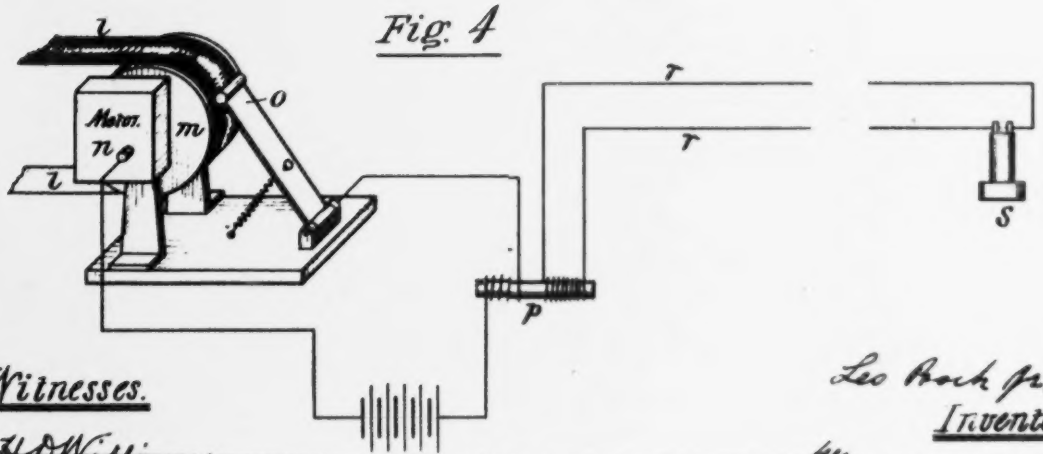

Witnesses.

Leo Bock jr.
Inventor

UNITED STATES PATENT OFFICE.

LEO BOCK, JR., OF NEW YORK, N. Y.

RECORDING AND REPRODUCING SOUND-WAVES.

SPECIFICATION forming part of Letters Patent No. 364,472, dated June 7, 1887.

Application filed December 4, 1886. Serial No. 220,692. (No model.)

To all whom it may concern:

Be it known that I, LEO BOCK, Jr., a citizen of the United States, residing at New York, county and State of New York, have invented certain new and useful Improvements in Recording and Reproducing Sound-Waves, of which the following is a specification.

In my application for Letters Patent, filed December 11, 1885, under Serial No. 185,364, is described a method of producing and retransmitting records of electrical and mechanical impulses or vibrations, consisting in causing a beam of light controlled by the impulses or vibrations to fall upon an actinically-sensitized transparent film or plate, thereby producing the desired record, then preparing from this negative record a circuit-controller in the form of a non-conducting perforated plate or film, and then retransmitting the original impulses or vibrations by placing the perforated non-conducting plate between a metal bed and stylus and moving it relatively to the stylus, thus allowing the stylus to make contact with the metallic bed through the perforations or openings in the non-conducting film or plate and cause to flow over the line electrical impulses or vibrations corresponding to those by which the record was originally produced.

Now, this invention, which is allied to the invention embraced in my before-mentioned application, insomuch as it embodies analogous processes and apparatus, has for its special object to record and retransmit articulate speech; and it consists, mainly, in the production of a transmitting medium composed of a conducting material provided with variable-resistance paths corresponding to the amplitude and rate of the vibrations to be retransmitted.

The best means of accomplishing the object of this invention at present known to me consists, first, in causing a beam of light, which is actuated or controlled by the diaphragm of a telephonic instrument, to vibrate on a moving film, plate, or sheet transversely to the direction of motion thereof, said plate or sheet being originally transparent, or subsequently made transparent, by developing, fixing, and clearing the same; second, in producing a record on the transparent film, plate, or sheet by exposing to the action of light a suitably-prepared sensitized conducting medium under the transparent record, and by subsequent treatment and fixing process varying its conductivity in proportion to the amount of light which passed through the record on the transparent film, plate, or sheet; and, thirdly, in retransmitting the recorded vibrations over a line by passing the variable-resistance paths of the conducting medium between a brush or roller and a metallic bed included in circuit with an electric battery and the receiving-instrument, or preferably in circuit with a battery and the primary coil of an inductorium, the secondary coil of which is included in the line-circuit with the receiving-instrument.

For the variable-resistance circuit controller I have devised a sensitized electric conducting film, plate, or sheet specially adapted to the purpose, consisting of a mixture of gelatine, glue, isinglass, or other organic matter, a dichromate salt, an electric conducting material in a finely-pulverized condition, as carbon, graphite, metals, or their electric conducting compounds, and water or other suitable solvent.

In the accompanying drawings, to which I will now refer, I show so much of apparatus adapted to the carrying out of my invention as is necessary for a full understanding of the same to be had.

Figure 1 represents in section the receiving and recording apparatus. Fig. 2 represents part of a negative record produced in the receiving and recording apparatus. Fig. 3 represents part of a variable-resistance circuit-controller prepared from and being the counter or positive of Fig. 2; and Fig. 4 is a diagram view of the essential parts of the transmitting apparatus.

The transparent material upon which the record is made is represented as a strip, *a*, made sensitive to the action of light by any of the well-known photographic processes. It passes around and is moved by the drum or cylinder *b*, which is rotated at a uniform speed

L. BOCK, JR.

RECORDING AND REPRODUCING SOUND WAVES.

No. 364,472. Patented June 7, 1887.

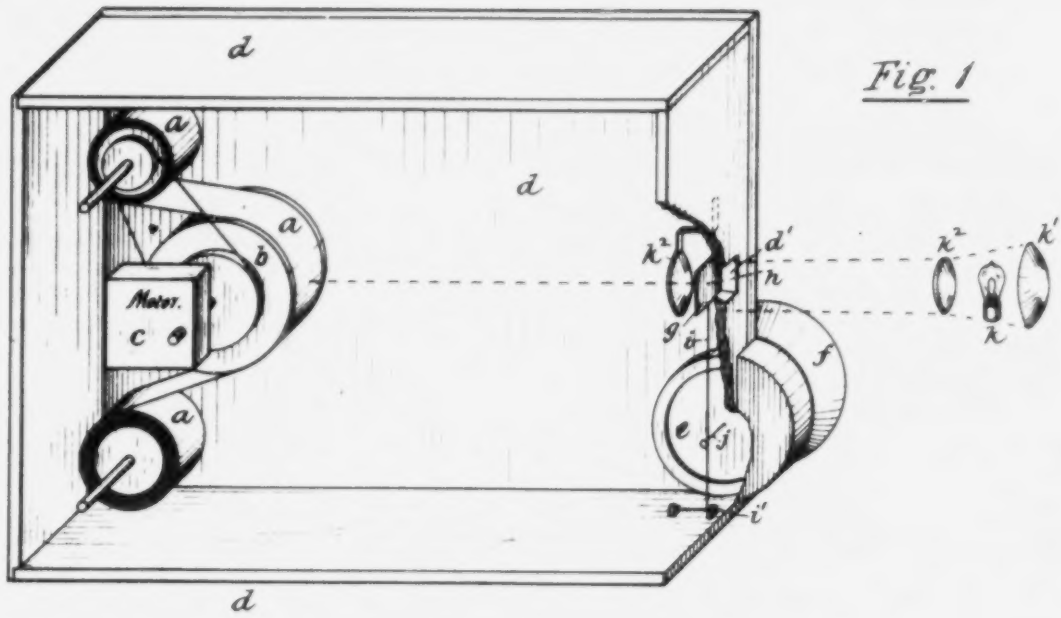

Fig. 1

Fig. 2

Fig. 3

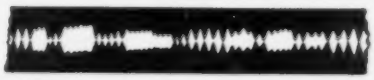

Fig. 4

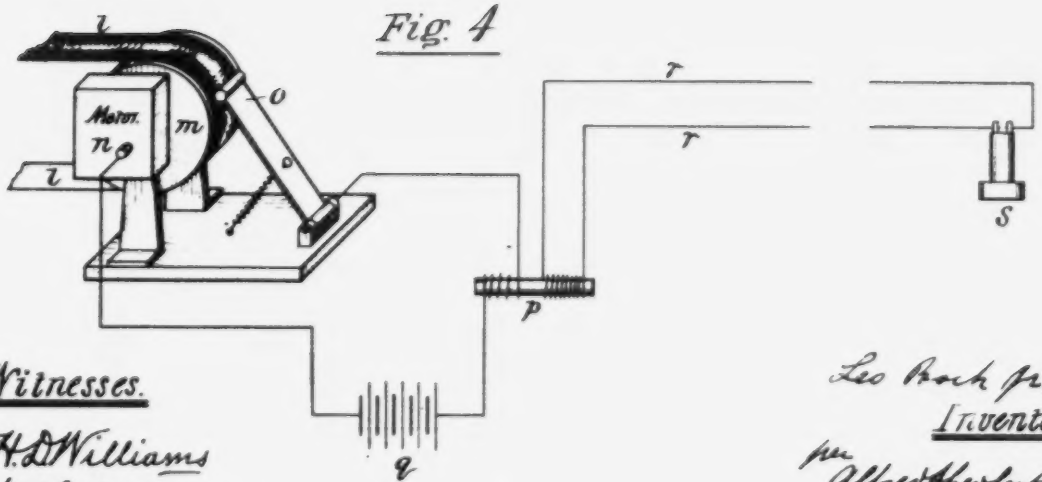

Witnesses.

H. D. Williams

Wm. H. Merseran.

Leo Bock Jr.

Inventor

per Alfred Shedlock.

Atty.

UNITED STATES PATENT OFFICE.

LEO BOCK, JR., OF NEW YORK, N. Y.

RECORDING AND REPRODUCING SOUND-WAVES.

SPECIFICATION forming part of Letters Patent No. 364,472, dated June 7, 1887.

Application filed December 4, 1886. Serial No. 220,692. (No model.)

To all whom it may concern:

Be it known that I, LEO BOCK, Jr., a citizen of the United States, residing at New York, county and State of New York, have invented certain new and useful Improvements in Recording and Reproducing Sound-Waves, of which the following is a specification.

In my application for Letters Patent, filed December 11, 1885, under Serial No. 185,364, is described a method of producing and retransmitting records of electrical and mechanical impulses or vibrations, consisting in causing a beam of light controlled by the impulses or vibrations to fall upon an actinically-sensitized transparent film or plate, thereby producing the desired record, then preparing from this negative record a circuit-controller in the form of a non-conducting perforated plate or film, and then retransmitting the original impulses or vibrations by placing the perforated non-conducting plate between a metal bed and stylus and moving it relatively to the stylus, thus allowing the stylus to make contact with the metallic bed through the perforations or openings in the non-conducting film or plate and cause to flow over the line electrical impulses or vibrations corresponding to those by which the record was originally produced.

Now, this invention, which is allied to the invention embraced in my before-mentioned application, insomuch as it embodies analogous processes and apparatus, has for its special object to record and retransmit articulate speech; and it consists, mainly, in the production of a transmitting medium composed of a conducting material provided with variable-resistance paths corresponding to the amplitude and rate of the vibrations to be retransmitted.

The best means of accomplishing the object of this invention at present known to me consists, first, in causing a beam of light, which is actuated or controlled by the diaphragm of a telephonic instrument, to vibrate on a moving film, plate, or sheet transversely to the direction of motion thereof, said plate or sheet being originally transparent, or subsequently made transparent; secondly, in producing in or on an actinically-sensitized conducting medium variable-resistance paths corresponding to the record produced on the film, plate, or sheet, by exposing to the action of light a suitably-prepared sensitized conducting medium under the transparent record, and by subsequent treatment and fixing process varying its conductivity in proportion to the amount of light which passed through the record on the transparent film, plate, or sheet; and, thirdly, in retransmitting the recorded vibrations over a line by passing the variable-resistance paths of the conducting medium between a brush or roller and a metallic bed included in circuit with an electric battery and the receiving-instrument, or preferably in circuit with a battery and the primary coil of an inductorium, the secondary coil of which is included in the line circuit with the receiving-instrument.

For the variable resistance circuit controller I have devised a sensitized electric conducting film, plate, or sheet specially adapted to the purpose, consisting of a mixture of gelatine, glue, isinglass, or other organic matter, a dichromate salt, an electric conducting material in a finely-pulverized condition, as carbon, graphite, metals, or their electric conducting compounds, and water or other suitable solvent.

In the accompanying drawings, to which I will now refer, I show so much of apparatus adapted to the carrying out of my invention as is necessary for a full understanding of the same to be had.

Figure 1 represents in section the receiving and recording apparatus. Fig. 2 represents part of a negative record produced in the receiving and recording apparatus. Fig. 3 represents part of a variable-resistance circuit-controller prepared from and being the counter or positive of Fig. 2; and Fig. 4 is a diagram view of the essential parts of the transmitting apparatus.

The transparent material upon which the record is made is represented as a strip, *a*, made sensitive to the action of light by any of the well-known photographic processes. It passes around and is moved by the drum or cylinder *b*, which is rotated at a uniform speed by the clock-work or other motor, *c*. The dark box *d* protects the strip *a* from extraneous light and has fitted in its side the diaphragm *e*, adapted to be actuated by sound-

waves through the mouth *f*. This diaphragm *e* may also be considered as the vibrating part of a telephonic receiver if the sound-waves to be recorded originate at a distance from the apparatus. This diaphragm *e* is caused to actuate the light-controlling device, which consists of a shield, *g*, provided with a fine hole, *h*, and carried on the end of the lever *i*, which is pivoted at its lower end, *i'*, to the bottom of the dark box *d*, so as to be capable of oscillation at right angles to the direction of vibration of the diaphragm *e*. This lever *i* is connected to the center of the diaphragm *e* by the fine adjusting-screw *j*. The shield *g* covers an opening, *d'*, in the end of the box *d*, and opposite this opening is located the source of light, *k*, the rays of which are preferably concentrated in the opening *d'* onto the shield *g*, which permits only such rays as can pass through the hole *h* to enter the dark box. A suitable arrangement of mirrors and lenses $k' k^2$ may be used to direct the rays of light from the source *k* to the opening *d'*.

The rays of light which enter the dark box *d* through the hole *h* of the shield *g* are, when the shield *g* is at rest, directed upon the center of the sensitized strip *a*. Now, as this strip *a* is moved at a uniform rate of speed and the shield *g* is rocked by the action of the diaphragm *e* thereon at right angles to the direction of motion of the strip, the hole *h*, during each complete vibration of the diaphragm, allows the lateral rays of light to impinge upon the strip *a* on both sides of the normal central line, thus acting on the sensitive material of the strip in such a manner that when the same is developed by the ordinary photographic process a sinuous negative marking is produced thereon, as shown at Fig. 2, the altitude of the sinuosities being in accordance with the amplitudes of the vibrations of the diaphragm, and their number or recurrence in accordance with the rates of the vibrations of the diaphragm. This strip *a*, as before stated, is transparent, and from it is prepared the variable circuit-controller *l*, which is represented in Fig. 3 as the positive or counterpart of Fig. 2.

The strip *l* is composed of a mixture of suitable organic material—as glue, gelatine, &c.; a dichromate salt—as of potassium, ammonium, &c.; a finely-pulverized electric conducting material—as carbon, metals, their conducting compounds, &c.; and water or other solvent of the organic material, by which it is brought into condition to be intimately mixed with the dichromate salt and conducting-powder and to be molded or formed into the desired shape. The quantity of each of the materials in this composition may be varied to suit the exigency of the case; but for general use good results may be obtained by the following proportions, viz: one hundred parts of gelatine dissolved in sufficient water to admit of finely-pulverized carbon, intimately mixed with the dissolved gelatine before forming into sheets. A strip or sheet of this sensitized conducting material is exposed to light under the negative record-strip *a*, and thus made insoluble by the combined action of the light and the dichromate salts on the organic matter, the insolubility being in proportion to the amount of light passing through the negative, so that the parts covered by the most opaque parts of the negative are the most removed or washed away in the subsequent washing process to which the strip or sheet is subjected. Now it will be observed that if this strip *l* be interposed in an electric circuit by placing it between a metallic bed and a brush or roller adapted to cover the greatest width of the path of the sinuosities and be moved uniformly under the brush or roller, the resistance of the circuit will be varied by the changes of conductivity of the path for the current through the part of the strip *k* covered by the sinuous markings.

In Fig. 4 is shown how the strip *l* is practically applied to reproduce by transmission over a telephone-line the original articulate sounds recorded in the receiving apparatus. In this view the strip *l* passes around and is moved by the drum or cylinder *m*, uniformly rotated by the spring or other motor, *n*. The brush or roller *o* is caused to bear on the sinuous markings of the strip *l*, and is connected to one end of the primary coil of the inductorium *p*, the other end of which is in contact with the drum *m*. Said primary circuit also includes the battery *q*. The secondary coil of the inductorium is included in the line *r*, at the other end of which is the telephonic receiver *s*.

The principles of operation in this transmitting apparatus are similar in all essential features to those of ordinary telephonic apparatus, the impulses in the secondary circuit in this case being induced by variations in the resistance of the primary circuit automatically produced by the movement of the variable-resistance circuit-controller *l*.

It will be understood that the variable-resistance path may be produced on the sensitized conducting sheet, plate, or film in a direct manner, by exposing the same to the action of light-rays controlled or directed thereon by the vibrations of a diaphragm in the receiving and recording instrument, such as is shown in Fig. 1; and my invention contemplates such production of the variable-resistance circuit-controller; but in most applications of the invention I prefer to first produce the record of sound-waves and therefrom produce the variable-resistance circuit-controller, especially when it is desired to retransmit the recorded sound-waves over several lines, by making the desired number of variable-resistance circuit-controllers from the one transparent negative

received and retransmitted and variable resistance circuit-controllers prepared from it at any subsequent time.

The sinuous markings on the strip *a* may be increased in width by means of the lens *k*², placed between the shield *g* and the strip *a*, which deflects the rays passing through the hole *h*.

Having now described my invention, what I claim, and desire to secure by Letters Patent, is—

1. As a means for retransmitting recorded articulate sound-waves, a circuit-controller consisting of an electrically-conductive film, plate, or sheet having a sinuous variable-resistance path corresponding to the sound-waves.

2. The combination, with a circuit-controller consisting of an electrically-conductive film, plate, or sheet having on its surface a variable-resistance path of sinuous form corresponding to sound-waves, of an electric circuit, including a metallic bed upon which said film, plate, or sheet is placed, and a brush or roller arranged to cover the variable-resistance path, and a telephonic receiving-instrument actuated by said circuit.

3. A circuit-controller composed of a gelatinous material, a dichromate salt, and a conductor of electricity in a finely-divided condition, having a variable-resistance path formed thereon.

Signed at New York, N. Y., December 1, 1886.

LEO BOCK, JR.

Witnesses:
H. D. WILLIAMS,
ALFRED SHEDLOCK.

waves through the mouth *f*. This diaphragm *e* may also be considered as the vibrating part of a telephonic receiver if the sound-waves to be recorded originate at a distance from the apparatus. This diaphragm *e* is caused to actuate the light-controlling device, which consists of a shield, *g*, provided with a fine hole, *h*, and carried on the end of the lever *i*, which is pivoted at its lower end, *i'*, to the bottom of the dark box *d*, so as to be capable of oscillation at right angles to the direction of vibration of the diaphragm *e*. This lever *i* is connected to the center of the diaphragm *e* by the fine adjusting-screw *j*. The shield *g* covers an opening, *d'*, in the end of the box *d*, and opposite this opening is located the source of light, *k*, the rays of which are preferably concentrated in the opening *d'* onto the shield *g*, which permits only such rays as can pass through the hole *h* to enter the dark box. A suitable arrangement of mirrors and lenses *k' k²* may be used to direct the rays of light from the source *k* to the opening *d'*.

The rays of light which enter the dark box *d* through the hole *h* of the shield *g* are, when the shield *g* is at rest, directed upon the center of the sensitized strip *a*. Now, as this strip *a* is moved at a uniform rate of speed and the shield *g* is rocked by the action of the diaphragm *e* thereon at right angles to the direction of motion of the strip, the hole *h*, during each complete vibration of the diaphragm, allows the lateral rays of light to impinge upon the strip *a* on both sides of the normal central line, thus acting on the sensitive material of the strip in such a manner that when the same is developed by the ordinary photographic process a sinuous negative marking is produced thereon, as shown at Fig. 2, the altitude of the sinuosities being in accordance with the amplitudes of the vibrations of the diaphragm, and their number or recurrence in accordance with the rates of the vibrations of the diaphragm. This strip *a*, as before stated, is transparent, and from it is prepared the variable circuit-controller *l*, which is represented in Fig. 3 as the positive or counterpart of Fig. 2.

The strip *l* is composed of a mixture of suitable organic material—as glue, gelatine, &c.; a dichromate salt—as of potassium, ammonium, &c.; a finely-pulverized electric conducting material—as carbon, metals, their conducting compounds, &c.; and water or other solvent of the organic material, by which it is brought into condition to be intimately mixed with the dichromate salt and conducting-powder and to be molded or formed into the desired shape. The quantity of each of the materials in this composition may be varied to suit the exigency of the case; but for general use good results may be obtained by the following proportions, viz: one hundred parts of gelatine dissolved in sufficient water to admit of its being formed into thin sheets, sixteen parts of potassium dichromate, and fifty parts of finely-pulverized carbon, intimately mixed with the dissolved gelatine before forming into sheets. A strip or sheet of this sensitized conducting material is exposed to light under the negative record-strip *a*, and thus made insoluble by the combined action of the light and the dichromate salts on the organic matter, the insolubility being in proportion to the amount of light passing through the negative, so that the parts covered by the most opaque parts of the negative are the most removed or washed away in the subsequent washing process to which the strip or sheet is subjected. Now it will be observed that if this strip *l* be interposed in an electric circuit by placing it between a metallic bed and a brush or roller adapted to cover the greatest width of the path of the sinuosities and be moved uniformly under the brush or roller, the resistance of the circuit will be varied by the changes of conductivity of the path for the current through the part of the strip *k* covered by the sinuous markings.

In Fig. 4 is shown how the strip *l* is practically applied to reproduce by transmission over a telephone-line the original articulate sounds recorded in the receiving apparatus. In this view the strip *l* passes around and is moved by the drum or cylinder *m*, uniformly rotated by the spring or other motor, *n*. The brush or roller *o* is caused to bear on the sinuous markings of the strip *l*, and is connected to one end of the primary coil of the inductorium *p*, the other end of which is in contact with the drum *m*. Said primary circuit also includes the battery *q*. The secondary coil of the inductorium is included in the line *r*, at the other end of which is the telephonic receiver *s*.

The principles of operation in this transmitting apparatus are similar in all essential features to those of ordinary telephonic apparatus, the impulses in the secondary circuit in this case being induced by variations in the resistance of the primary circuit automatically produced by the movement of the variable-resistance circuit-controller *l*.

It will be understood that the variable-resistance path may be produced on the sensitized conducting sheet, plate, or film in a direct manner, by exposing the same to the action of light-rays controlled or directed thereon by the vibrations of a diaphragm in the receiving and recording instrument, such as is shown in Fig. 1; and my invention contemplates such production of the variable-resistance circuit-controller; but in most applications of the invention I prefer to first produce the record of sound-waves and therefrom produce the variable-resistance circuit-controller, especially when it is desired to retransmit the recorded sound-waves over several lines, by making the desired number of variable-resistance circuit-controllers from the one transparent negative record. This transparent negative may be retained as a permanent record of the message

received and retransmitted and variable-resistance circuit-controllers prepared from it at any subsequent time.

The sinuous markings on the strip *a* may be increased in width by means of the lens k^3, placed between the shield *g* and the strip *a*, which deflects the rays passing through the hole *h*.

Having now described my invention, what I claim, and desire to secure by Letters Patent, is—

1. As a means for retransmitting recorded articulate sound-waves, a circuit-controller consisting of an electrically-conductive film, plate, or sheet having a sinuous variable-resistance path corresponding to the sound-waves.

2. The combination, with a circuit-controller consisting of an electrically-conductive film, plate, or sheet having on its surface a variable-resistance path of sinuous form corresponding to sound-waves, of an electric circuit, including a metallic bed upon which said film, plate, or sheet is placed, and a brush or roller arranged to cover the variable-resistance path, and a telephonic receiving-instrument actuated by said circuit.

3. A circuit-controller composed of a gelatinous material, a dichromate salt, and a conductor of electricity in a finely-divided condition, having a variable-resistance path formed thereon.

Signed at New York, N. Y., December 1, 1886.

LEO BOCK, JR.

Witnesses:
H. D. WILLIAMS,
ALFRED SHEDLOCK.

808

(No Model.) 3 Sheets—Sheet 1.

T. A. EDISON.

PHONOGRAPH.

No. 386,974. Patented July 31, 1888.

Fig. 1.

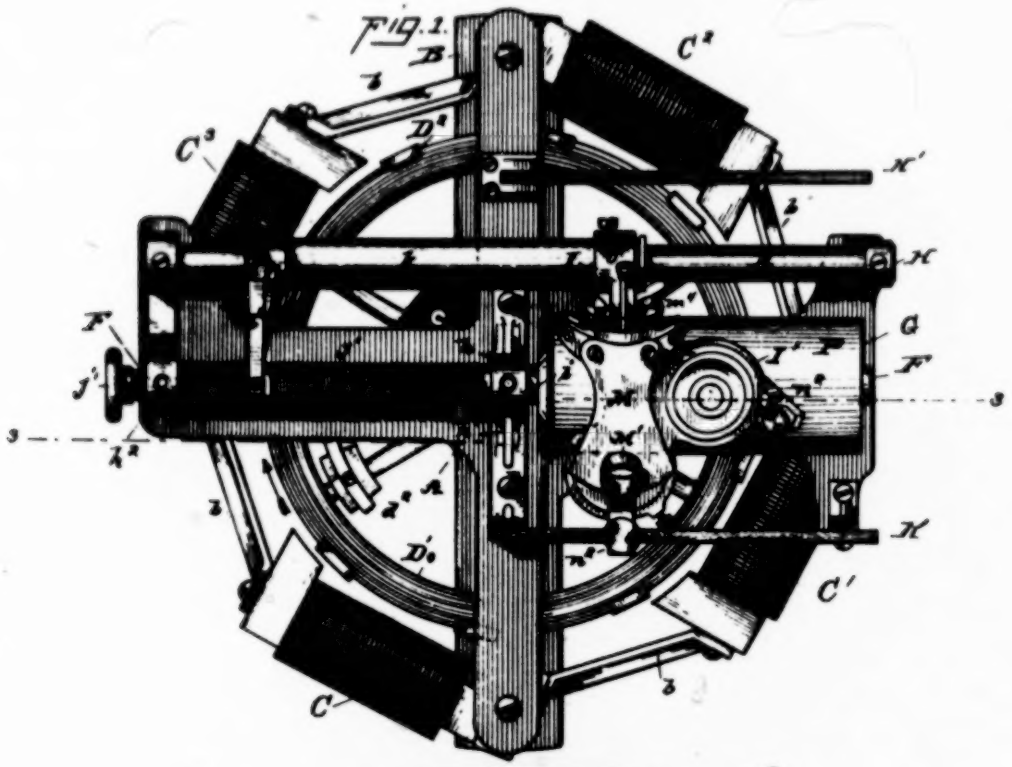

Fig. 2.

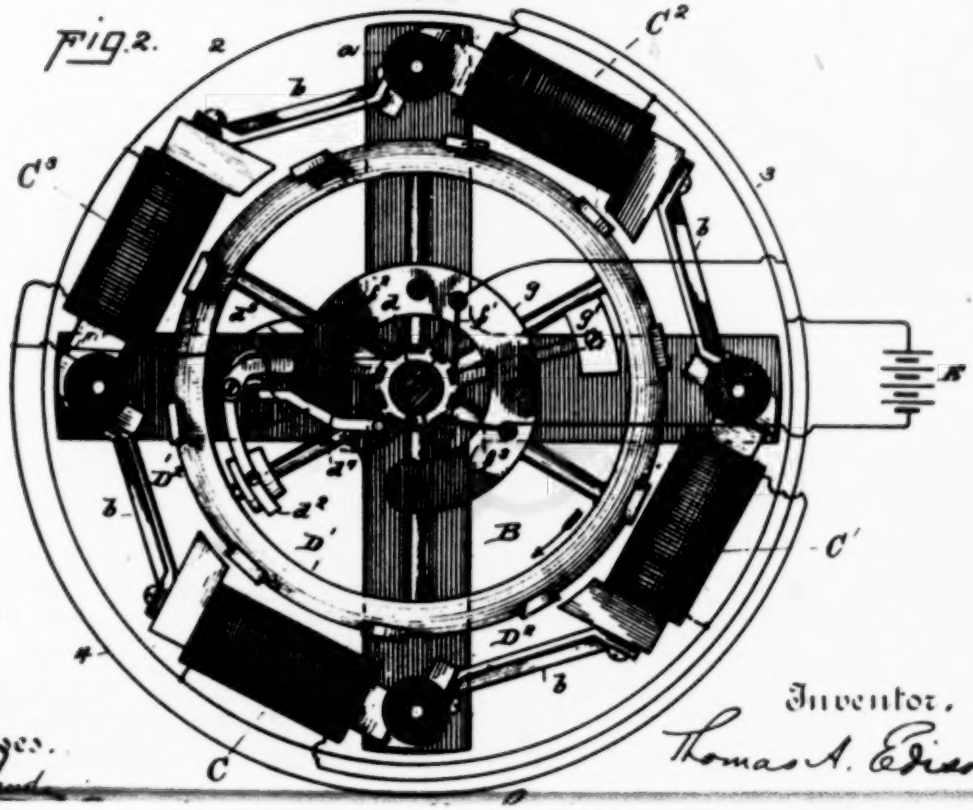

Witnesses.

Inventor.

Thomas A. Edison.

T. A. EDISON.

PHONOGRAPH.

No. 386,974. Patented July 31, 1888.

Fig. 1.

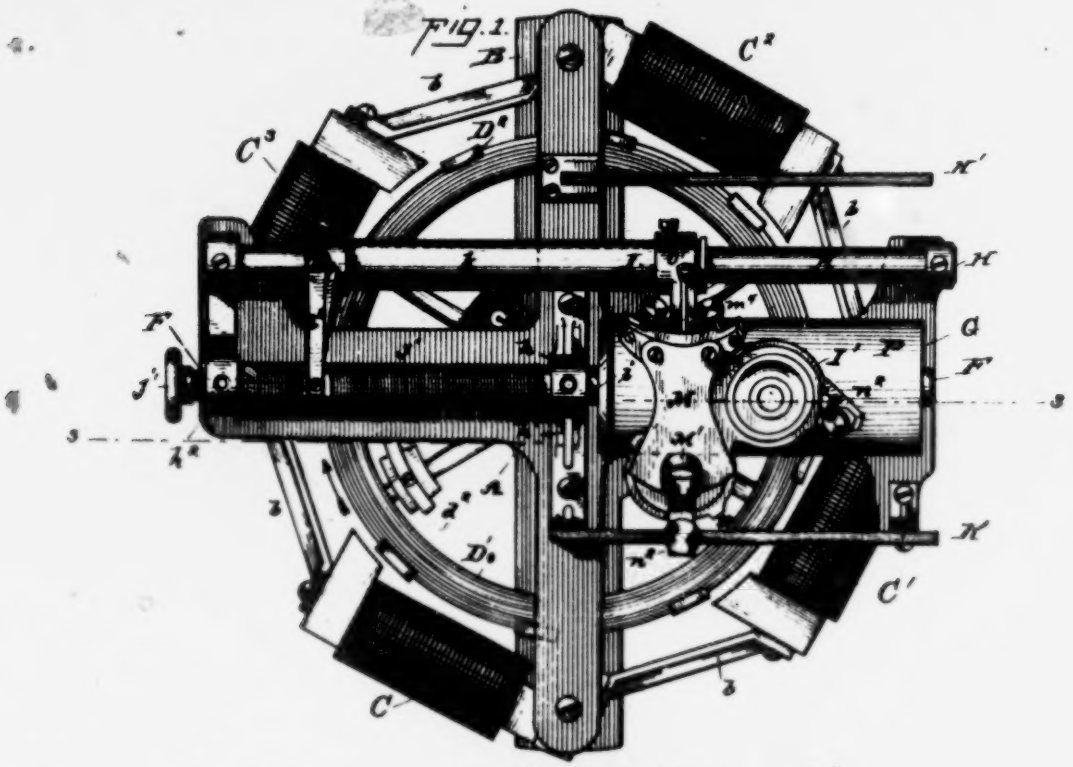

Fig. 2.

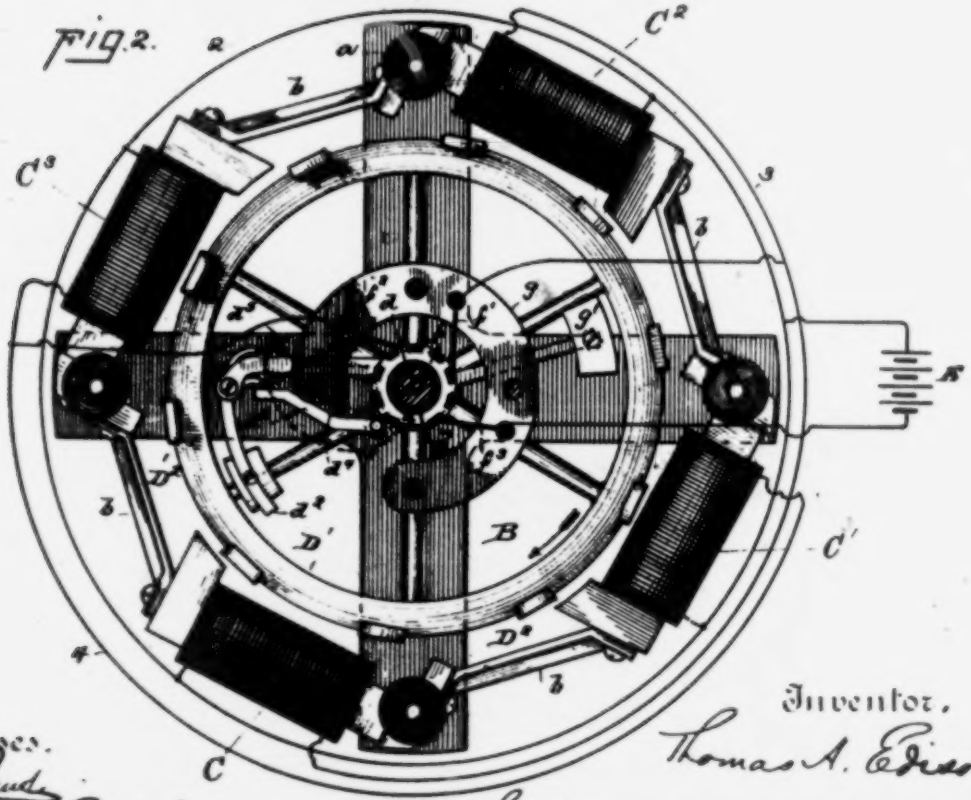

Witnesses.

E. L. Rowland

William Ayer.

Inventor.

Thomas A. Edison.

By his Attorneys

Dyer & Seely.

(No Model.) 3 Sheets—Sheet 2.

T. A. EDISON.

PHONOGRAPH.

No. 386,974. Patented July 31, 1888.

Fig. 3.

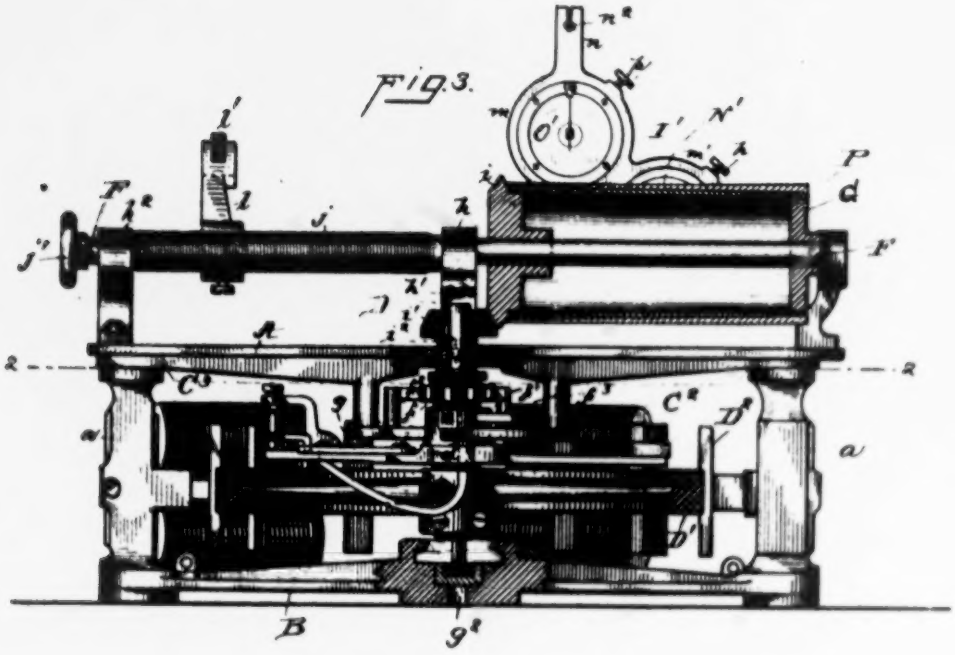

Fig. 4.

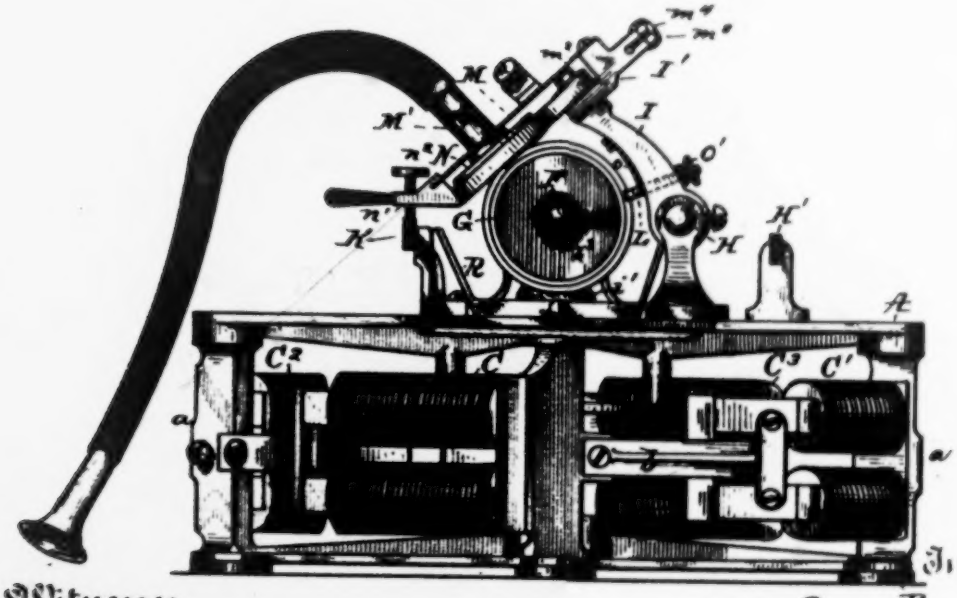

Witnesses:
E. C. Rowland

Inventor,
Thomas A. Edison.

T. A. EDISON.

PHONOGRAPH.

No. 386,974. Patented July 31, 1888.

Fig. 3.

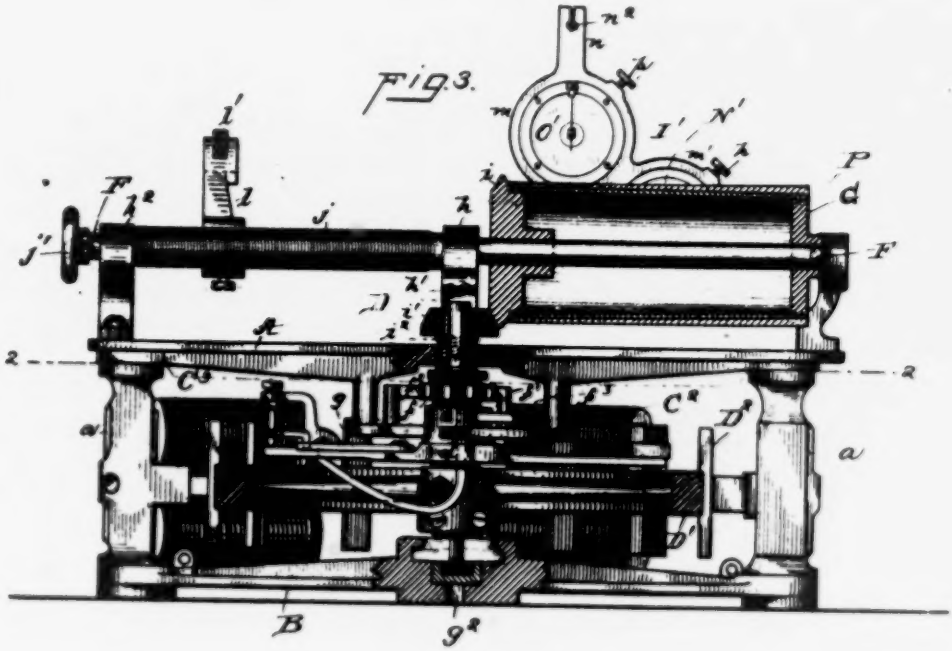

Fig. 4.

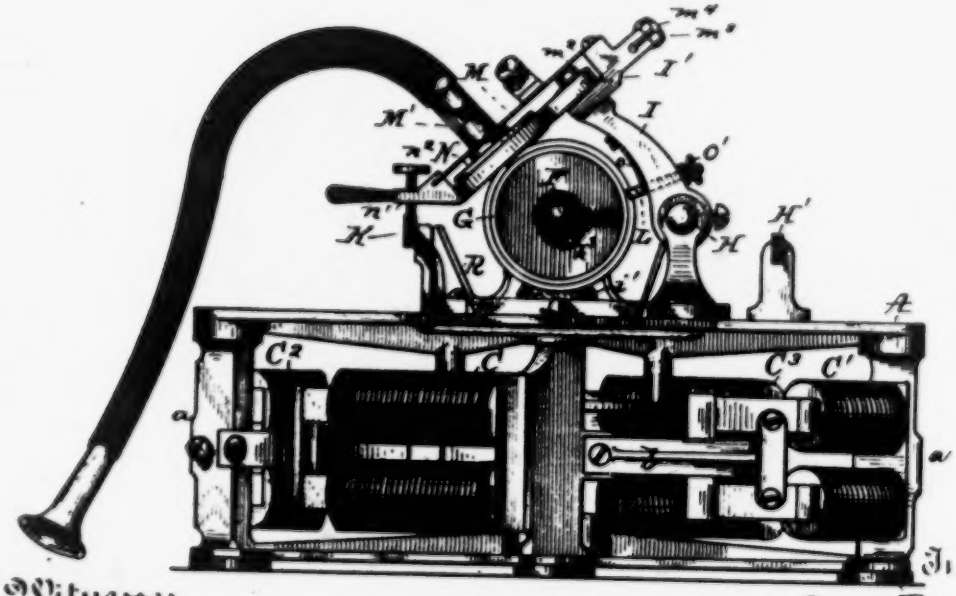

Witnesses.
E. L. Rowland
William Beyer

Inventor,
Thomas A. Edison.
By his Attorneys
Dyer & Seely.

812

(No Model.) 3 Sheets—Sheet 3.

T. A. EDISON.

PHONOGRAPH.

No. 386,974. Patented July 31, 1888.

Fig. 8

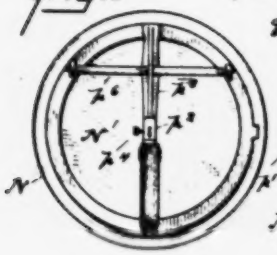

Fig. 9

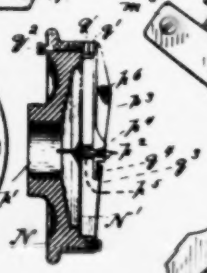

Fig. 5.

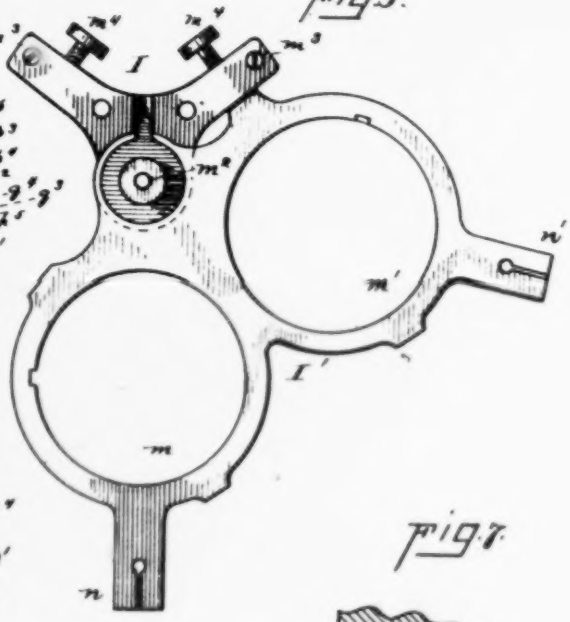

Fig. 10.

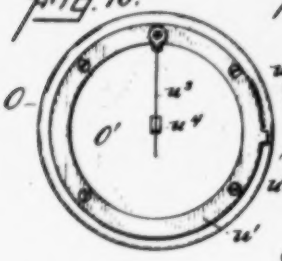

Fig. 11.

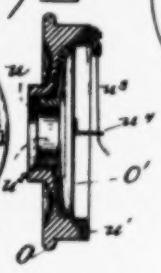

Fig. 7.

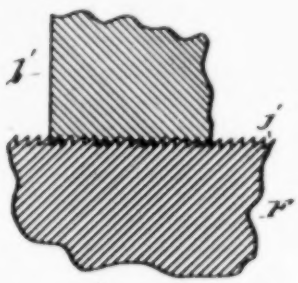

Fig. 6

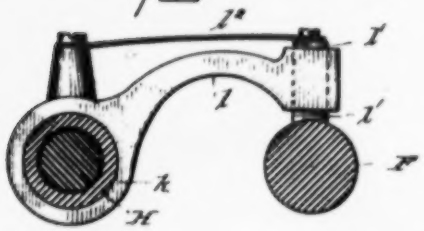

Fig. 12.

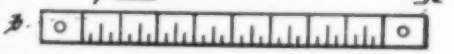

Fig. 13.

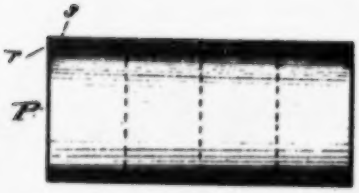

Fig. 14.

Witnesses

Inventor
Thomas A. Edison.

UNITED STATES PATENT OFFICE.

THOMAS A. EDISON, OF LLEWELLYN PARK, NEW JERSEY.

PHONOGRAPH.

SPECIFICATION forming part of Letters Patent No. 386,974, dated July 31, 1888.

Application filed November 26, 1887. Serial No. 256,149. (No model.)

To all whom it may concern:

Be it known that I, THOMAS A. EDISON, of Llewellyn Park, in the county of Essex and State of New Jersey, have invented a certain new and useful Improvement in Phonographs, (Case No. 741,) of which the following is a specification.

The object I have in view is, generally, to so improve the phonograph that it will be well adapted for use by the public and will be a convenient and efficient machine for various uses.

In the accompanying drawings, forming a part hereof, Figure 1 is a top view of the machine; Fig. 2, a horizontal section on the line 2 2 in Fig. 3, with a diagram of the motor connections; Fig. 3, a vertical section on the line 3 3 in Fig. 1, with the swinging holder and guide-arm thrown back; Fig. 4, an elevation of the machine looking at the end of the phonogram-cylinder; Fig. 5, top view of the swinging holder carrying the recorder and reproducer; Fig. 6, a side elevation of the guide-arm; Fig. 7, a sectional view, on an enlarged scale, showing the engagement of the spring guide-block with the lead-screw; Figs. 8 and 9, a bottom view and central section, respectively, of the recorder; Figs. 10 and 11, a bottom view and central section, respectively, of the reproducer; Fig. 12, an elevation of the guide-rest; Fig. 13, a sectional view of a phonogram blank showing by dotted lines its division into sections, and Fig. 14 an elevation showing the four different sizes of the phonogram-blank.

Like letters denote corresponding parts in all the figures.

The frame of the machine is constructed, for convenience, of a top and a bottom plate, A B, each constructed as a spider composed of four arms, the ends of the arms of the two frames being joined by vertical posts *a*. To these posts are connected the yokes of four magnets, C C' C² C³, each projecting from the post to which it is attached toward the adjoining post, to which its pole-pieces are connected by braces *b* of brass or other non-magnetic metal. The poles of the four magnets project inwardly, as shown, and are cut with concave faces, the poles of all four magnets being in the line of a circle. Within this is a fly-wheel, D', constructed of brass and having a heavy rim so as to increase its weight. Upon the periphery of the rim of the fly-wheel are secured a *number of armatures, D², of iron*, which are placed vertically, equal distances apart, and travel in their movement close to the pole-pieces of the magnets C, C', C², and C³. Upon the shaft D, above the wheel D', is mounted a sleeve, *d*, of insulating material, upon which is secured a metal collar, *e*, and above this collar a commutator, *f*, the commutator being composed of a ring of metal having its surface broken by blocks of insulating material, so that it presents alternate spaces of insulation and metal in a manner well understood. From the collar *e* projects an arm, *d'*, in a radial direction, and upon the end of this arm is pivoted a swinging weight arm, *d³*, which, by its outward movement, moves a lever, *d⁴*, which is held against its movement by an adjustable spring, *d⁵*. The lever *d⁴* bears normally upon the insulated contact-screw *d⁶*, which is connected by a wire with the base of the commutator *f*.

The magnets C C' C² C³ have one end of their windings connected together by a wire, 2. The other end of the windings of the two opposite magnets C and C² are connected together by a wire, 3, while the other ends of the windings of the opposite magnets C' and C³ are connected together by a wire, 4. The wires 3 and 4 are connected with two springs, *f'* and *f²*, which bear upon the face of the commutator *f*. A spring, *f³*, bears directly upon the collar *e*. These three springs are supported by a circular piece of insulation, *g*, which is supported above the wheel D' and below the top plate by means of posts extending down from the top plate.

One pole of the battery E which drives the motor is connected with the wire 2, which joins one end of the windings of all the magnets, while the other pole of the battery is connected with the spring *f³*, bearing upon the collar *e*. The parts are arranged so that the wheel D' will be turned by the magnets always in the direction shown by the arrow in the drawings.

The magnets C and C² first receive the current and attract two armatures upon the

(No Model.) 3 Sheets—Sheet 3.

T. A. EDISON.

PHONOGRAPH.

No. 386,974. Patented July 31, 1888.

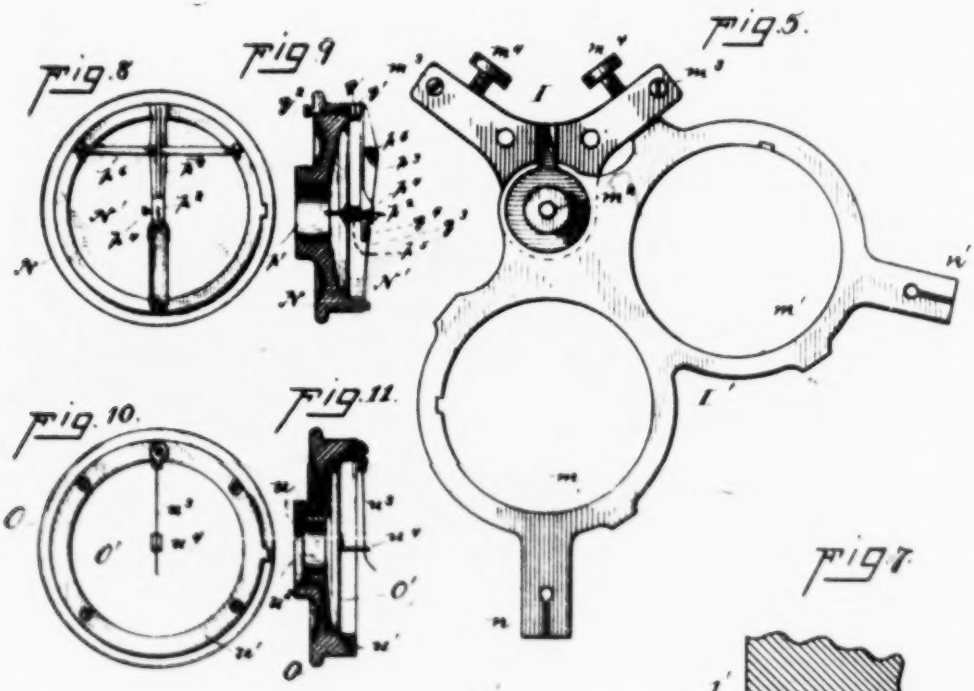

Witnesses:
E. C. Howland.
William Ayer

Inventor
Thomas A. Edison.

By his Attorneys
Dyer & Seely.

UNITED STATES PATENT OFFICE.

THOMAS A. EDISON, OF LLEWELLYN PARK, NEW JERSEY.

PHONOGRAPH.

SPECIFICATION forming part of Letters Patent No. 386,974, dated July 31, 1888.

Application filed November 26, 1887. Serial No. 256,189. (No model.)

To all whom it may concern:

Be it known that I, THOMAS A. EDISON, of Llewellyn Park, in the county of Essex and State of New Jersey, have invented a certain new and useful Improvement in Phonographs, (Case No. 741,) of which the following is a specification.

The object I have in view is, generally, to so improve the phonograph that it will be well adapted for use by the public and will be a convenient and efficient machine for various uses.

In the accompanying drawings, forming a part hereof, Figure 1 is a top view of the machine; Fig. 2, a horizontal section on the line 2 2 in Fig. 3, with a diagram of the motor connections; Fig. 3, a vertical section on the line 3 3 in Fig. 1, with the swinging holder and guide-arm thrown back; Fig. 4, an elevation of the machine looking at the end of the phonogram-cylinder; Fig. 5, top view of the swinging holder carrying the recorder and reproducer; Fig. 6, a side elevation of the guide-arm; Fig. 7, a sectional view, on an enlarged scale, showing the engagement of the spring guide-block with the lead-screw; Figs. 8 and 9, a bottom view and central section, respectively, of the recorder; Figs. 10 and 11, a bottom view and central section, respectively, of the reproducer; Fig. 12, an elevation of the guide-rest; Fig. 13, a sectional view of a phonogram blank showing by dotted lines its division into sections, and Fig. 14 an elevation showing the four different sizes of the phonogram-blank.

Like letters denote corresponding parts in all the figures.

The frame of the machine is constructed, for convenience, of a top and a bottom plate, A B, each constructed as a spider composed of four arms, the ends of the arms of the two frames being joined by vertical posts *a*. To these posts are connected the yokes of four magnets, C C' C² C³, each projecting from the post to which it is attached toward the adjoining post, to which its pole-pieces are connected by braces *b* of brass or other non-magnetic metal. The poles of the four magnets project inwardly, as shown, and are cut with concave faces, the poles of all four magnets being in the line of a circle. Within this circle and mounted upon a vertical shaft, D, is a fly-wheel, D', constructed of brass and having a heavy rim so as to increase its weight. Upon the periphery of the rim of the fly-wheel are secured a number of armatures, D², of iron, which are placed vertically, equal distances apart, and travel in their movement close to the pole-pieces of the magnets C, C', C², and C³. Upon the shaft D, above the wheel D', is mounted a sleeve, *d*, of insulating material, upon which is secured a metal collar, *e*, and above this collar a commutator, *f*, the commutator being composed of a ring of metal having its surface broken by blocks of insulating material, so that it presents alternate spaces of insulation and metal in a manner well understood. From the collar *e* projects an arm, *d'*, in a radial direction, and upon the end of this arm is pivoted a swinging weight arm, *d²*, which, by its outward movement, moves a lever, *d³*, which is held against its movement by an adjustable spring, *d⁴*. The lever *d³* bears normally upon the insulated contact-screw *d⁵*, which is connected by a wire with the base of the commutator *f*.

The magnets C C' C² C³ have one end of their windings connected together by a wire, 2. The other end of the windings of the two opposite magnets C and C² are connected together by a wire, 3, while the other ends of the windings of the opposite magnets C' and C³ are connected together by a wire, 4. The wires 3 and 4 are connected with two springs, *f'* and *f²*, which bear upon the face of the commutator *f*. A spring, *f³*, bears directly upon the collar *e*. These three springs are supported by a circular piece of insulation, *g*, which is supported above the wheel D' and below the top plate by means of posts extending down from the top plate.

One pole of the battery E which drives the motor is connected with the wire 2, which joins one end of the windings of all the magnets, while the other pole of the battery is connected with the spring *f²*, bearing upon the collar *e*. The parts are arranged so that the wheel D' will be turned by the magnets always in the direction shown by the arrow in the drawings.

The magnets C and C² first receive the current and attract two armatures upon the wheel, and then the magnets C' and C³ receive the current and attract two armatures upon

the wheel, the current being transferred from one pair of magnets to another in succession, so that the wheel is given a continuous rotary movement. An excess of battery-power is preferably used, and the speed of the wheel controlled by the governor, formed by the spring-retracted arms d^2 and d^3. This governor opens the circuit when the speed exceeds the normal, so that within limits of variation which are so small as to be practically of no effect in the operation of the machine the speed will be kept uniform. By the adjustment of the spring d^4 the governor can be made to work at any desired point. By the use of an electro-magnetic motor of this description—namely, one composed of a heavy fly-wheel carrying armatures on its periphery, which are attracted by magnets arranged in a circle around the fly-wheel—a slow and uniform motion can be obtained, which is a matter of the highest importance in the operation of the phonograph, and tends to simplify the construction, since the complication introduced by the employment of a number of speed-reducing wheels is avoided. Projecting from the collar *e* on the opposite side to the governor is an arm, g', carrying a weight at its end for counterbalancing the weight of the governor, so that the wheel may be a balanced one. The shaft D is stepped on a jewel, g^3, at the center of the bottom plate, A, giving freedom of movement to the wheel and reducing the noise of friction to the minimum, so as to not affect materially the operation of the phonograph.

Upon the top plate, A, is journaled the horizontal shaft F, this shaft being carried by a journal-box, *h*, in the top of an arched standard, h', at the center of the top plate, and at one end by a journal-box, h^2, at the end of one of the arms of the top plate. Between the bearings *h* and h^2 the shaft F is larger than it is outside of such bearings, so that it bears against the inner faces of the bearings by shoulders which prevent any longitudinal movement of the shaft. The shaft F projects beyond the bearing *h* to the opposite side of the machine from the bearing h^2, but is not supported at its end, it being free to receive the phonogram-cylinder G, which is slipped upon this shaft, preferably removably, and held by a spring-pin, h^3, taking into a hole in the end of the shaft. This phonogram-cylinder is made hollow, of brass or other suitable metal, its heads bearing upon the shaft, so as to center the cylinder properly. The cylinder is made slightly tapering, for a purpose which will be presently explained, its inner end—that next to the bearing *h*—being somewhat larger than its outer end. The inner end of the phonogram-cylinder is constructed as a beveled friction-wheel, *i*, upon which bears a beveled pinion, i', of some suitable soft material. This pinion i' is mounted upon the upper end of the with an operative face, of leather or other similar material, mounted upon a metal hub. This metal hub is preferably constructed to slide vertically upon the shaft D, it being prevented from turning thereon by a suitable key, and beneath the pinion is a spiral spring, i^2, which forces the pinion upwardly and keeps it solidly against the beveled wheel on the inner end of the phonogram cylinder, so that the wear of the surfaces is taken up and the pinion is kept in firm contact. By the use of this beveled friction-gearing, of which the soft-surfaced pinion is a part, I am enabled to change the motion from the vertical shaft of the motor to the horizontal shaft of the phonogram-cylinder without the production of noise, which would be detrimental to the operation of the instrument.

The horizontal arrangement of the motor permits a large fly-wheel to be used, while the compactness of the instrument is maintained. Between the bearings *h* and h^2 the shaft F is cut with an exceedingly fine screw-thread, *j*, of the peculiar construction which will be explained farther on, while outside of the bearing h^2 the shaft is provided with a hand-wheel, j', by which it can be held when it is desired to remove the phonogram-cylinder from the shaft or remove the phonogram-blank or phonogram from the phonogram cylinder without taking the latter off of the shaft.

Parallel with the shaft F, and located in the rear of the same, is a guide-rod, H, mounted in suitable supports at its ends and extending entirely across the machine. Upon this guide-rod is an accurately-fitting tube, *k*, which is of such length that it can be moved upon the rod between the supports at the end of the rod a distance equal to the length of the phonogram-cylinder. Upon the end of this tube next to the phonogram cylinder is secured the holding arm, which carries the recorder and reproducer, while at the opposite end of this tube is the guide-arm, which engages with the lead-screw *j*. The guide-arm is a rigid arm, *l*, having a hub which slips on the tube *k*, and is secured thereto by a set-screw. This guide-arm projects toward the shaft F, terminating at its free end above the screw-thread *j*. The end of the arm *l* is slotted, so as to form two guide-cheeks, between which plays a vertically-sliding block, l'. This block l' bears upon the screw-thread *j*, and is cut with a section of the corresponding thread. A spring, l^2, extends along the top of the arm *l*, and is secured to the block l', forcing such block downwardly upon the screw-thread, so that a rocking movement of the tube *k* can be made within certain limits without disengaging the block l' from the screw-thread *j*. The screw-thread *j* and the thread upon the block l' are cut as fine as it is possible to make a screw-thread having the desired wearing capacity. I make this screw-thread, preferably, with

being forced back, I construct these threads as a ratchet, as shown in Fig. 7, the engaging sides of the threads being straight and the other sides beveled, so that the danger of slipping backward is entirely obviated. Upon the other end of the tube *k* is secured the arm I by means of a set-screw, such arm projecting forward over the center of the phonogram-cylinder. Upon the upper end of this arm I is pivoted the holding-frame I'; placed nearly at right angles to the arm I, and made, similar to the frame of spectacles, with two eyes, *m m'*. The pivoting-screw *m²* for this frame passes through the frame at one side and centrally between the eyes *m m'*, the nut for securing the frame bearing upon the spring-washer beneath it, so that the frame will hold itself at either limit of its throw and will not be jarred from position.

The arm I has two horns, *m³*, through which the set-screws *m⁴* pass for limiting the movement of the frame I' and for adjusting the point at which the frame will be stopped when swung in either direction, so as to bring its holding eyes in the correct relation to the phonogram-cylinder. These holding-eyes carry the recorder and reproducer, the construction of which will be presently explained, and the object of the swinging frame is to permit either the recorder or reproducer to be brought into operative relation with the phonogram-cylinder.

The screws *m⁴*, bearing upon the swinging frame I', form a means for adjusting such frame and the recorder or reproducer carried by it laterally with respect to the spiral line of record upon the surface of the phonogram-blank. This adjustment is a matter of especial importance so far as the reproducer is concerned. The recorder produces the record, and hence makes its own track; but the reproducer must follow that track. It has been proposed to mount the reproducing-point in such a flexible manner that it will follow the track made by the recorder without adjustment; but I have found that the lateral adjustment of the reproducer enables me to bring its point readily into the track of the record, and to give it the proper relation to the record for producing the maximum effects. The adjustment is made while the operator has his ear to the listening-tube, the character of the reproduced sounds determining when the proper adjustment is reached.

The eyes *m m'* have fingers *n n'*, which project forward and have passing through them adjusting screws *n²*, which rest as each eye is brought into position for operation upon a guide-rest, K, which extends parallel to the shaft F in front of the phonogram-cylinder and supports the holding-frame at the required elevation to bring the recorder or reproducer into accurate adjustment. The fingers *n n'* to receive the arm I when it is thrown back. This rest is preferably more or less springy in its character, so as not to jar the parts injuriously when the arm is thrown back upon it. Passing through the arm I near the tube *k* is the shank of a cutting-tool, L, which is thrown forward by a spring, *o*, on the inner side of the arm and is retracted by a thumb-nut, *o'*, on the screw-threaded end of the shank outside of the arm. This cutter L is designed to turn off the surface of the phonogram or phonogram-blank, so as to make it true for recording, or to turn off one record and leave the surface ready for another record. This enables one phonogram-blank to be used over and over again for recording and reproducing, the recorder and reproducer being brought into operative relation with the clear surface, as the diameter of the phonogram-blank is decreased, by the adjustment of the screws *n²*, the yielding guide-block *l'* permitting this to be done.

Upon the arm I, above the swinging holding-frame for the recorder and reproducer, is secured a carrying-plate, M, to which is connected a tube, M'. This tube serves as the mouth and ear piece of the instrument, or it may have mouth and ear pieces removably attached to it. The plate M is stationary, and the holding-eyes are swung under it alternately, so that one tube answers both for recording and reproducing, thus adding to the simplicity of the instrument.

The recorder N is a circular plate, which fits either eye, *m* or *m'*, of the carrying-frame, it being provided with a rib engaging with a groove in the eye, so that it will always have the same position in the eye. It is shown as held by the eye *m'*. A set-screw, *p*, is used for holding the plate in the eye. This plate N has an opening, *p'*, through it, which is brought into line with the tube M' when the eye *m'* is swung into position for the operation of the recorder. The back of the plate N is recessed to form a circular chamber, on a shoulder in which is placed the diaphragm N', which is preferably made of celluloid or some other light material, and is placed in the recess at the back of the plate N, but is left free at its edges. The recording-point *p²* is secured to the center of the diaphragm by wax or in any other suitable way. This point is constructed of a thin plate of steel, which is cut or ground to a point on one edge and is beveled backwardly away from that edge, so as to give a support for the indenting-point and prevent vibration of that point in operation. This point passes through the end of the lever *p³*, and is secured therein by a set-screw, *p⁴*, the point being surrounded between the lever and the diaphragm by a small tube, *p⁵*, of rubber or other suitable material. The lever *p³* is rigid in its construction, and is mounted upon a cross-pin, *p⁶*, of considerable length

the wheel, the current being transferred from one pair of magnets to another in succession, so that the wheel is given a continuous rotary movement. An excess of battery-power is preferably used, and the speed of the wheel controlled by the governor, formed by the spring-retracted arms d^2 and d^3. This governor opens the circuit when the speed exceeds the normal, so that within limits of variation which are so small as to be practically of no effect in the operation of the machine the speed will be kept uniform. By the adjustment of the spring d^4 the governor can be made to work at any desired point. By the use of an electro-magnetic motor of this description—namely, one composed of a heavy fly-wheel carrying armatures on its periphery, which are attracted by magnets arranged in a circle around the fly-wheel—a slow and uniform motion can be obtained, which is a matter of the highest importance in the operation of the phonograph, and tends to simplify the construction, since the complication introduced by the employment of a number of speed-reducing wheels is avoided. Projecting from the collar *e* on the opposite side to the governor is an arm, g', carrying a weight at its end for counterbalancing the weight of the governor, so that the wheel may be a balanced one. The shaft D is stepped on a jewel, g^2, at the center of the bottom plate, A, giving freedom of movement to the wheel and reducing the noise of friction to the minimum, so as to not affect materially the operation of the phonograph.

Upon the top plate, A, is journaled the horizontal shaft F, this shaft being carried by a journal-box, h, in the top of an arched standard, h', at the center of the top plate, and at one end by a journal-box, h^2, at the end of one of the arms of the top plate. Between the bearings h and h^2 the shaft F is larger than it is outside of such bearings, so that it bears against the inner faces of the bearings by shoulders which prevent any longitudinal movement of the shaft. The shaft F projects beyond the bearing h to the opposite side of the machine from the bearing h^2, but is not supported at its end, it being free to receive the phonogram-cylinder G, which is slipped upon this shaft, preferably removably, and held by a spring-pin, h^3, taking into a hole in the end of the shaft. This phonogram-cylinder is made hollow, of brass or other suitable metal, its heads bearing upon the shaft, so as to center the cylinder properly. The cylinder is made slightly tapering, for a purpose which will be presently explained, its inner end—that next to the bearing h—being somewhat larger than its outer end. The inner end of the phonogram-cylinder is constructed as a beveled friction-wheel, i, upon which bears a beveled pinion, i', of some suitable soft material. This pinion i' is mounted upon the upper end of the shaft D, which projects through the top plate into the space between the legs of the arched standard h'. The pinion i' may be provided with an operative face, of leather or other similar material, mounted upon a metal hub. This metal hub is preferably constructed to slide vertically upon the shaft D, it being prevented from turning thereon by a suitable key, and beneath the pinion is a spiral spring, i^2, which forces the pinion upwardly and keeps it solidly against the beveled wheel on the inner end of the phonogram cylinder, so that the wear of the surfaces is taken up and the pinion is kept in firm contact. By the use of this beveled friction-tion-gearing, of which the soft-surfaced pinion is a part, I am enabled to change the motion from the vertical shaft of the motor to the horizontal shaft of the phonogram-cylinder without the production of noise, which would be detrimental to the operation of the instrument.

The horizontal arrangement of the motor permits a large fly-wheel to be used, while the compactness of the instrument is maintained. Between the bearings h and h' the shaft F is cut with an exceedingly fine screw-thread, j, of the peculiar construction which will be explained farther on, while outside of the bearing h' the shaft is provided with a hand-wheel, j', by which it can be held when it is desired to remove the phonogram-cylinder from the shaft or remove the phonogram-blank or phonogram from the phonogram cylinder without taking the latter off of the shaft.

Parallel with the shaft F, and located in the rear of the same, is a guide-rod, H, mounted in suitable supports at its ends and extending entirely across the machine. Upon this guide-rod is an accurately-fitting tube, k, which is of such length that it can be moved upon the rod between the supports at the end of the rod a distance equal to the length of the phonogram-cylinder. Upon the end of this tube next to the phonogram cylinder is secured the holding arm, which carries the recorder and reproducer, while at the opposite end of this tube is the guide-arm, which engages with the lead-screw j. The guide-arm is a rigid arm, l, having a hub which slips on the tube k, and is secured thereto by a set-screw. This guide-arm projects toward the shaft F, terminating at its free end above the screw-thread j. The end of the arm l is slotted, so as to form two guide-cheeks, between which plays a vertically-sliding block, l'. This block l' bears upon the screw-thread j, and is cut with a section of the corresponding thread. A spring, l^2, extends along the top of the arm l, and is secured to the block l', forcing such block downwardly upon the screw-thread, so that a rocking movement of the tube k can be made within certain limits without disengaging the block l' from the screw-thread j. The screw-thread j and the thread upon the block l' are cut as fine as it is possible to make a screw-thread having the desired wearing capacity. I make this screw-thread, preferably, with about one hundred threads to the inch, and in order to make such a fine thread do the work required of it without danger of the guide-arm

being forced back, I construct these threads as a ratchet, as shown in Fig. 7, the engaging sides of the threads being straight and the other sides beveled, so that the danger of slipping backward is entirely obviated. Upon the other end of the tube *k* is secured the arm I by means of a set-screw, such arm projecting forward over the center of the phonogram-cylinder. Upon the upper end of this arm I is pivoted the holding-frame I′, placed nearly at right angles to the arm I, and made, similar to the frame of spectacles, with two eyes, *m m′*. The pivoting-screw *m²* for this frame passes through the frame at one side and centrally between the eyes *m m′*, the nut for securing the frame bearing upon the spring-washer beneath it, so that the frame will hold itself at either limit of its throw and will not be jarred from position.

The arm I has two horns, *m³*, through which the set-screws *m⁴* pass for limiting the movement of the frame I′ and for adjusting the point at which the frame will be stopped when swung in either direction, so as to bring its holding eyes in the correct relation to the phonogram-cylinder. These holding-eyes carry the recorder and reproducer, the construction of which will be presently explained, and the object of the swinging frame is to permit either the recorder or reproducer to be brought into operative relation with the phonogram-cylinder.

The screws *m⁴*, bearing upon the swinging frame I′, form a means for adjusting such frame and the recorder or reproducer carried by it laterally with respect to the spiral line of record upon the surface of the phonogram-blank. This adjustment is a matter of especial importance so far as the reproducer is concerned. The recorder produces the record, and hence makes its own track; but the reproducer must follow that track. It has been proposed to mount the reproducing-point in such a flexible manner that it will follow the track made by the recorder without adjustment; but I have found that the lateral adjustment of the reproducer enables me to bring its point readily into the track of the record, and to give it the proper relation to the record for producing the maximum effects. The adjustment is made while the operator has his ear to the listening-tube, the character of the reproduced sounds determining when the proper adjustment is reached.

The eyes *m m′* have fingers *n n′*, which project forward and have passing through them adjusting screws *n²*, which rest as each eye is brought into position for operation upon a guide-rest, K, which extends parallel to the shaft F in front of the phonogram-cylinder and supports the holding-frame at the required elevation to bring the recorder or reproducer into accurate adjustment. The fingers *n n′* have small handles attached to them, as shown in Fig. 4, by which the swinging holding frame can be more conveniently manipulated. Back of the guide-rod H there is another rest, H′, to receive the arm I when it is thrown back. This rest is preferably more or less springy in its character, so as not to jar the parts injuriously when the arm is thrown back upon it. Passing through the arm I near the tube *k* is the shank of a cutting-tool, L, which is thrown forward by a spring, *o*, on the inner side of the arm and is retracted by a thumb-nut, *o′*, on the screw-threaded end of the shank outside of the arm. This cutter L is designed to turn off the surface of the phonogram or phonogram-blank, so as to make it true for recording, or to turn off one record and leave the surface ready for another record. This enables one phonogram-blank to be used over and over again for recording and reproducing, the recorder and reproducer being brought into operative relation with the clear surface, as the diameter of the phonogram-blank is decreased, by the adjustment of the screws *n²*, the yielding guide-block *l′* permitting this to be done.

Upon the arm I, above the swinging holding-frame for the recorder and reproducer, is secured a carrying-plate, M, to which is connected a tube, M′. This tube serves as the mouth and ear piece of the instrument, or it may have mouth and ear pieces removably attached to it. The plate M is stationary, and the holding-eyes are swung under it alternately, so that one tube answers both for recording and reproducing, thus adding to the simplicity of the instrument.

The recorder N is a circular plate, which fits either eye, *m* or *m′*, of the carrying-frame, it being provided with a rib engaging with a groove in the eye, so that it will always have the same position in the eye. It is shown as held by the eye *m′*. A set-screw, *p*, is used for holding the plate in the eye. This plate N has an opening, *p′*, through it, which is brought into line with the tube M′ when the eye *m′* is swung into position for the operation of the recorder. The back of the plate N is recessed to form a circular chamber, on a shoulder in which is placed the diaphragm N′, which is preferably made of celluloid or some other light material, and is placed in the recess at the back of the plate N, but is left free at its edges. The recording-point *p²* is secured to the center of the diaphragm by wax or in any other suitable way. This point is constructed of a thin plate of steel, which is cut or ground to a point on one edge and is beveled backwardly away from that edge, so as to give a support for the indenting-point and prevent vibration of that point in operation. This point passes through the end of the lever *p³*, and is secured therein by a set-screw, *p⁴*, the point being surrounded between the lever and the diaphragm by a small tube, *p⁵*, of rubber or other suitable material. The lever *p³* is rigid in its construction, and is mounted upon a cross-pin, *p⁶*, of considerable length, which is journaled at its ends at the sides of the plate N. The lever *p³* extends beyond the pivoting-pin *p⁶* and rests at its outer end against a block, *q*, which is faced with a piece

of pure india-rubber, q'. This block is set in a recess in the edge of the plate N, and is adjusted forward by a screw, q^2. The adjustable block q and its elastic face q' form a yielding limiting-stop for the movement of the indenting-point. The other end of the lever p^2 extends beyond the indenting-point p^3 and receives inward pressure from a spring, q^3, which is secured to the rim of the plate N, opposite to the block q, and presses the lever p^2 and the indenting-point inwardly, so as to give the center of the diaphragm a slight inward bend, producing an initial strain upon the diaphragm. Between the end of the spring q^3 and the lever p^2 a piece of india-rubber, q^4, is placed. The lever p^2, being rigid in its construction and in its support by the long bearing, prevents any vibration of the indenting-point, while the adjustable limit-stop formed by the block q and rubber q' limit the movement of the diaphragm to a small compass. This construction of recorder I have found exceedingly effective in use. The diaphragm is highly sensitive and responds accurately to speech vibrations. The movement of the indenting-point is quite free within exceedingly small limits; but the resistance to its movement increases enormously as the extent of the movement is increased; hence the importance of the fundamental tones in the operation of the instrument is reduced, while the hissing tones which produce movements of a small extent are given an undue importance in the record. This makes the reproduced sound clear and intelligible, since the hissing sounds are brought out clearly and can be distinguished from the scraping noises of the instrument.

It will be observed that the diaphragm is under constant tension and can have no movement at all except that which is permitted by the elasticity of the yielding limit-stop q'. Heretofore the diaphragm of the phonograph-recorder and the indenting point have not been limited in their forward movement, except by the capacity of the diaphragm for vibration. This has permitted strong waves, owing to great momentum and the small amount of energy stored up as a retracting-force, to give abnormal and untruthful vibrations to the diaphragm. With my present recorder the diaphragm does not force the lever forward into space, but compresses matter always in contact—viz., the rubber q'; hence nearly all the work is stored up in the compression of q' to effect the return movement, and momentum becoming a small factor compared to the power stored up, the diaphragm is not given untruthful vibrations. This principle of construction of the recorder I have termed a "closed" or "constrained" system of movement as distinguished from the open or free system of movement heretofore employed.

I do not claim herein the peculiar recorder *per se*, since it is made the subject of a separate

The reproducer which I employ is also an improved instrument of great effectiveness. It has a plate, O, similar to the plate N, which is held removably in the eye m' in the same way that the plate N is held in the eye m'. This plate O has an opening, n, through it, which is brought into line with the tube M, for bringing the reproducer into operative relation with the phonogram cylinder. The plate O is recessed at its back and has stretched across it a diaphragm, O', which is preferably a thin animal membrane. This diaphragm is secured in place by a ring, n', which is secured to the back of the plate O, while the diaphragm is stretched by another ring, n^2, which has a neck screwing into the opening n of the plate, and is capable of being turned by a tool, so as to stretch the diaphragm O' more or less. To one edge of the ring n' is secured a fine spring-wire, n^3, which is long enough to reach from the point where it is secured to the center of the diaphragm, and has its inner end turned downwardly, as shown, to follow the spiral line of indentations upon the phonogram. The inner end of this spring wire n^3 is attached to the center of the diaphragm by a strip, n^4, of rubber. The tendency of the spring-wire is to bend away from the diaphragm, so that it strains the small rubber strip n^4 and places the diaphragm under an initial tension. The movement of the point of the wire n^3 in reproducing is so slight that the strain is never wholly removed from the rubber strip n^4, and hence the diaphragm is always under tension, which tends to draw it outwardly at the center. This makes the instrument exceedingly sensitive and capable of reproducing sounds accurately. The end of the wire n^3 being rounded and burnished, it will not obliterate the phonogram-record, even though that record is made in quite soft material.

I have found that by connecting the reproducing-point with the diaphragm by a strip of elastic material—such as rubber held under tension—the proper wave motion is transmitted to the diaphragm, but the scratching noises, which seem to require molecular transmission, are largely obliterated.

I do not claim herein the peculiar reproducer *per se*, since this is made the subject of a separate application for patent filed March 2, 1888, Serial No. 265,888.

The indenting-point of the recorder has an appreciable width, while the reproducing-point of the reproducer is much finer; hence the track of indentations on the phonogram will be much wider than the reproducing-point and the adjustment of the reproducing-point laterally with respect to the indented track need not be extremely accurate. Should the reproducing-point be found to rest only on the edge of the indented track—which will be indicated by imperfect reproduction—the adjustment of one of the screws m^4 while the listening-tube is held to the ear will cause the

dented track to give the required clearness of reproduction.

It will be observed that both the recorder and reproducer are complete instruments, each in itself, held by a plate readily removable from the machine. This enables these instruments, which are delicate parts of the apparatus, to be readily removed from the machine for repairs, adjustment, or replacement by other similar parts. As has been previously stated, the phonogram-cylinder is slightly tapering. This is also true of the bore of the phonogram-blanks P, which are constructed of a cylinder, *r*, of some hard material and covered with a recording-surface, *s*, of wax or a wax-like substance. The recording-surface *s* is a true cylinder, while, as before stated, the internal bore of the cylinder *r* is tapering to fit the phonogram-cylinder, so that the phonogram-blank can be pushed upon the cylinder and will be held thereon by friction. I propose to make these phonogram-blanks the entire length of the phonogram-cylinder and also to divide such full-length phonogram-blanks into parts, so that sectional phonogram-blanks will be produced, which will be, for illustration, one-fourth, one-half, and three-fourths the length of the full sized phonogram-blank. All of these sectional phonogram-blanks as well as the full-sized phonogram-blank will have the tapering bore, so that they can be pushed upon the tapering phonogram-cylinder until they bind and the instrument can then be adjusted to them for recording and reproducing.

I do not claim herein a phonogram-blank or phonogram having a recording-surface of wax or a wax-like material, nor such a device when the wax surface is mounted on a backing of tougher material, such features being claimed in my application No. 734, Serial No. 252,964. Neither do I claim herein a phonogram-blank or phonogram having a tapering bore, or such a bore and a cylindrical recording-surface, since these latter features are set forth and claimed in my Patent No. 382,418, dated May 8, 1888.

By having the phonogram-cylinder mounted upon the shaft F outside of the bearing *h* the phonogram-blanks can be slipped onto and off of the cylinder without disturbing any part of the machine. Upon the guide-rest K, I mark a graduated scale, *t*, by which I can set the reproducing-instrument for reproducing from any part of the phonogram.

A phonogram may have upon its surface the record of two or more letters or other papers or memoranda, and a note may be filed with the phonogram stating between what numbers on the scale *t* each letter or memorandum is recorded on the phonogram. This will enable the instrument to be set for reproducing the exact letter or memorandum by adjustment phonogram-blank when the cutter L is being used.

For the control of the instrument it is only necessary that a proper circuit-breaker should be placed in the circuit between the battery and the motor, so that the motor can be stopped and started at will. It will be observed that by raising the recorder or reproducer off of the phonogram-cylinder the yielding guide-block *l'*, which takes into the lead-screw *j*, will also be raised out of engagement with the lead-screw, and, although the phonogram-cylinder continues to turn, the recorder or reproducer is not advanced. This enables an operator of the instrument to set the instrument back any distance he may desire to reproduce over again any portion of the matter which he has misunderstood or desires to have repeated.

What I claim as my invention is—

1. In a phonograph, the combination, with the revolving phonogram-carrying shaft and phonogram-cylinder adapted to carry a removable phonogram-blank, of an electric motor having a heavy fly-wheel, armatures carried by such fly-wheel, electro-magnets attracting such armatures, and a commutator, substantially as set forth.

2. In a phonograph, the combination, with the horizontal shaft carrying the phonogram, of a vertical shaft, an electro-magnetic motor mounted upon such vertical shaft, and a beveled friction-gearing transmitting the motion from the vertical shaft to the horizontal shaft, substantially as set forth.

3. In a phonograph, the combination, with the vertical shaft carrying the balance-wheel, electro-magnetic motor, and stepped in a jewel-bearing, of the horizontal phonogram-carrying shaft, and the beveled friction-gearing having one wheel of soft material, substantially as set forth.

4. In a phonograph, the combination of the electro-magnetic motor, consisting of a heavy fly-wheel carrying armatures on its periphery, magnets attracting such armatures, and a commutator with a centrifugal governor controlling the electric circuit of the motor and maintaining a uniform speed of such motor, and a phonogram-carrying shaft connected with the motor by friction-gearing, substantially as set forth.

5. The combination, with the vertical motor-shaft, of the horizontal phonogram-shaft carrying a beveled friction-wheel, and a beveled friction-pinion of soft material mounted on the motor-shaft and pressed against the wheel on the phonogram-shaft by a spring, substantially as set forth.

6. In a phonograph, the combination, with a phonogram-cylinder and advancing screw-thread, of a swinging frame carrying together

of pure india-rubber, q'. This block is set in a recess in the edge of the plate N, and is adjusted forward by a screw, q^2. The adjustable block q and its elastic face q' form a yielding limiting-stop for the movement of the indenting-point. The other end of the lever p^3 extends beyond the indenting-point p^2 and receives inward pressure from a spring, q^3, which is secured to the rim of the plate N, opposite to the block q, and presses the lever p^3 and the indenting-point inwardly, so as to give the center of the diaphragm a slight inward bend, producing an initial strain upon the diaphragm. Between the end of the spring q^3 and the lever p^3 a piece of india-rubber, q^4, is placed. The lever p^3, being rigid in its construction and in its support by the long bearing, prevents any vibration of the indenting-point, while the adjustable limit-stop formed by the block q and rubber q' limit the movement of the diaphragm to a small compass. This construction of recorder I have found exceedingly effective in use. The diaphragm is highly sensitive and responds accurately to speech vibrations. The movement of the indenting-point is quite free within exceedingly small limits; but the resistance to its movement increases enormously as the extent of the movement is increased; hence the importance of the fundamental tones in the operation of the instrument is reduced, while the hissing tones which produce movements of a small extent are given an undue importance in the record. This makes the reproduced sound clear and intelligible, since the hissing sounds are brought out clearly and can be distinguished from the scraping noises of the instrument.

It will be observed that the diaphragm is under constant tension and can have no movement at all except that which is permitted by the elasticity of the yielding limit-stop q'. Heretofore the diaphragm of the phonograph-recorder and the indenting point have not been limited in their forward movement, except by the capacity of the diaphragm for vibration. This has permitted strong waves, owing to great momentum and the small amount of energy stored up as a retracting-force, to give abnormal and untruthful vibrations to the diaphragm. With my present recorder the diaphragm does not force the lever forward into space, but compresses matter always in contact—viz., the rubber q'; hence nearly all the work is stored up in the compression of q' to effect the return movement, and momentum becoming a small factor compared to the power stored up, the diaphragm is not given untruthful vibrations. This principle of construction of the recorder I have termed a "closed" or "constrained" system of movement as distinguished from the open or free system of movement heretofore employed.

I do not claim herein the peculiar recorder *per se*, since it is made the subject of a separate application for patent filed March 2, 1888, Serial No. 265,887.

The reproducer which I employ is also an improved instrument of great effectiveness. It has a plate, O, similar to the plate N, which is held removably in the eye w' in the same way that the plate N is held in the eye w'. This plate O has an opening, s, through it, which is brought into line with the tube M, for bringing the reproducer into operative relation with the phonogram cylinder. The plate O is recessed at its back and has stretched across it a diaphragm, O', which is preferably a thin animal membrane. This diaphragm is secured in place by a ring, s', which is secured to the back of the plate O, while the diaphragm is stretched by another ring, s^2, which has a neck screwing into the opening s of the plate, and is capable of being turned by a tool, so as to stretch the diaphragm O' more or less. To one edge of the ring s' is secured a fine spring-wire, s^3, which is long enough to reach from the point where it is secured to the center of the diaphragm, and has its inner end turned downwardly, as shown, to follow the spiral line of indentations upon the phonogram. The inner end of this spring wire s^3 is attached to the center of the diaphragm by a strip, s^4, of rubber. The tendency of the spring-wire is to bend away from the diaphragm, so that it strains the small rubber strip s^4 and places the diaphragm under an initial tension. The movement of the point of the wire s^3 in reproducing is so slight that the strain is never wholly removed from the rubber strip s^4, and hence the diaphragm is always under tension, which tends to draw it outwardly at the center. This makes the instrument exceedingly sensitive and capable of reproducing sounds accurately. The end of the wire s^3 being rounded and burnished, it will not obliterate the phonogram-record, even though that record is made in quite soft material.

I have found that by connecting the reproducing-point with the diaphragm by a strip of elastic material—such as rubber held under tension—the proper wave motion is transmitted to the diaphragm, but the scratching noises, which seem to require molecular transmission, are largely obliterated.

I do not claim herein the peculiar reproducer *per se*, since this is made the subject of a separate application for patent filed March 2, 1888, Serial No. 265,888.

The indenting-point of the recorder has an appreciable width, while the reproducing-point of the reproducer is much finer; hence the track of indentations on the phonogram will be much wider than the reproducing-point and the adjustment of the reproducing-point laterally with respect to the indented track need not be extremely accurate. Should the reproducing-point be found to rest only on the edge of the indented track—which will be indicated by imperfect reproduction—the adjustment of one of the screws m' while the listening-tube is held to the ear will cause the spectacles to be adjusted so as to bring the reproducing-point sufficiently into the in-

dented track to give the required clearness of reproduction.

It will be observed that both the recorder and reproducer are complete instruments, each in itself, held by a plate readily removable from the machine. This enables these instruments, which are delicate parts of the apparatus, to be readily removed from the machine for repairs, adjustment, or replacement by other similar parts. As has been previously stated, the phonogram-cylinder is slightly tapering. This is also true of the bore of the phonogram-blanks P, which are constructed of a cylinder, *r*, of some hard material and covered with a recording-surface, *s*, of wax or a wax-like substance. The recording-surface *s* is a true cylinder, while, as before stated, the internal bore of the cylinder *r* is tapering to fit the phonogram-cylinder, so that the phonogram-blank can be pushed upon the cylinder and will be held thereon by friction. I propose to make these phonogram-blanks the entire length of the phonogram-cylinder and also to divide such full-length phonogram-blanks into parts, so that sectional phonogram-blanks will be produced, which will be, for illustration, one-fourth, one-half, and three-fourths the length of the full sized phonogram-blank. All of these sectional phonogram-blanks as well as the full-sized phonogram-blank will have the tapering bore, so that they can be pushed upon the tapering phonogram-cylinder until they bind and the instrument can then be adjusted to them for recording and reproducing.

I do not claim herein a phonogram-blank or phonogram having a recording-surface of wax or a wax-like material, nor such a device when the wax surface is mounted on a backing of tougher material, such features being claimed in my application No. 734, Serial No. 252,964. Neither do I claim herein a phonogram-blank or phonogram having a tapering bore, or such a bore and a cylindrical recording-surface, since these latter features are set forth and claimed in my Patent No. 382,418, dated May 8, 1888.

By having the phonogram-cylinder mounted upon the shaft F outside of the bearing *h* the phonogram-blanks can be slipped onto and off of the cylinder without disturbing any part of the machine. Upon the guide-rest K, I mark a graduated scale, *t*, by which I can set the reproducing-instrument for reproducing from any part of the phonogram.

A phonogram may have upon its surface the record of two or more letters or other papers or memoranda, and a note may be filed with the phonogram stating between what numbers on the scale *t* each letter or memorandum is recorded on the phonogram. This will enable the instrument to be set for reproducing the exact letter or memorandum by adjustment with reference to the scale *t*. As shown in Fig. 4, a pan, R, may be slipped under the phonogram-cylinder G upon the frame A, for receiving the shavings from the phonogram or phonogram-blank when the cutter L is being used.

For the control of the instrument it is only necessary that a proper circuit-breaker should be placed in the circuit between the battery and the motor, so that the motor can be stopped and started at will. It will be observed that by raising the recorder or reproducer off of the phonogram-cylinder the yielding guide-block *l'*, which takes into the lead-screw *j*, will also be raised out of engagement with the lead-screw, and, although the phonogram-cylinder continues to turn, the recorder or reproducer is not advanced. This enables an operator of the instrument to set the instrument back any distance he may desire to reproduce over again any portion of the matter which he has misunderstood or desires to have repeated.

What I claim as my invention is—

1. In a phonograph, the combination, with the revolving phonogram-carrying shaft and phonogram-cylinder adapted to carry a removable phonogram-blank, of an electric motor having a heavy fly-wheel, armatures carried by such fly-wheel, electro-magnets attracting such armatures, and a commutator, substantially as set forth.

2. In a phonograph, the combination, with the horizontal shaft carrying the phonogram, of a vertical shaft, an electro-magnetic motor mounted upon such vertical shaft, and a beveled friction-gearing transmitting the motion from the vertical shaft to the horizontal shaft, substantially as set forth.

3. In a phonograph, the combination, with the vertical shaft carrying the balance-wheel, electro-magnetic motor, and stepped in a jewel-bearing, of the horizontal phonogram-carrying shaft, and the beveled friction-gearing having one wheel of soft material, substantially as set forth.

4. In a phonograph, the combination of the electro-magnetic motor, consisting of a heavy fly-wheel carrying armatures on its periphery, magnets attracting such armatures, and a commutator with a centrifugal governor controlling the electric circuit of the motor and maintaining a uniform speed of such motor, and a phonogram-carrying shaft connected with the motor by friction-gearing, substantially as set forth.

5. The combination, with the vertical motor-shaft, of the horizontal phonogram-shaft carrying a beveled friction-wheel, and a beveled friction-pinion of soft material mounted on the motor-shaft and pressed against the wheel on the phonogram-shaft by a spring, substantially as set forth.

6. In a phonograph, the combination, with a phonogram-cylinder and advancing screw-thread, of a swinging frame carrying together the separate recorder and reproducer and adapted to bring either into position for operation by the swinging of the frame, substantially as set forth.

7. In a phonograph, the combination, with

the revolving recording-surface, of a swinging spectacle-frame carrying the recorder and reproducer and adapted to be swung so as to bring either into operative relation with the surface, substantially as set forth.

8. In a phonograph, the combination, with a revolving recording-surface, of a swinging frame carrying the recorder and reproducer, and a stationary plate carrying the single speaking or listening tube, the swinging of the frame bringing either the recorder or reproducer into operative relation with the surface and with the speaking or listening tube, substantially as set forth.

9. In a phonograph, the combination, with a revolving phonogram-cylinder, an arm having a movement parallel with the axis of said cylinder, and the reproducer carried by a frame mounted on such arm and adjustable laterally thereon, whereby the reproducer can be readily adjusted to the record, substantially as set forth.

10. In a phonograph, the reproducer carried by a pivoted frame swinging across the lines of record, and an adjusting-screw for determining the lateral position of the reproducer, substantially as set forth.

11. In a phonograph, the combination, with the revolving phonogram-cylinder, of the holding-arm mounted to swing toward and away from the surface of said cylinder, and the reproducer mounted on such arm and laterally adjustable thereon, substantially as set forth.

12. In a phonograph, the combination, with the revolving phonogram-cylinder, of the holding-arm mounted to swing toward and away from the surface of such cylinder, the reproducer mounted on such arm and laterally adjustable thereon, an adjusting-screw for determining the position of the holding-arm relative to the phonogram-cylinder, and an adjusting-screw for determining the lateral position of the reproducer, substantially as set forth.

13. In a phonograph, the combination, with the revolving phonogram-cylinder, of the advancing holding-arm carrying the recorder or reproducer, and a stationary guide-rest for supporting the holding-arm in proper relation with the phonogram-cylinder, substantially as set forth.

14. In a phonograph, the combination, with the revolving phonogram-cylinder, of the advancing holding-arm carrying the recorder or reproducer, a stationary guide-rest for supporting the holding-arm in proper relation with the phonogram-cylinder, and an adjusting-screw for adjusting the height of the holding-arm above the guide-rest, substantially as set forth.

15. In a phonograph, the combination, with the phonogram-cylinder and the lead-screw, an arm carrying the recorder or reproducer, a guide-arm connected with the carrying-arm, a yielding guide-block engaging with the lead-screw, a guide rest, and an adjusting-screw for adjusting the height of the carrying-arm upon the guide-rest, substantially as set forth.

16. In a phonograph, the combination, with the swinging arm and the recorder or reproducer carried thereby, of the springy back-rest upon which such carrying arm is thrown, substantially as set forth.

17. In a phonograph, the combination, with the revolving phonogram-cylinder, of the advancing recorder or reproducer, and the scale for determining the position of the recording or reproducing point upon the phonogram or blank, substantially as set forth.

18. In a phonograph, the combination, with the revolving phonogram-cylinder, and recorder and reproducer mounted upon an advancing holding arm and adjustable toward and away from the phonogram-cylinder, of a cutting-tool movable with such holding-arm and independently adjustable toward and away from the phonogram-cylinder, whereby the recorder and reproducer can be adjusted out of operative engagement with the phonogram-blank, and the cutting-tool can be adjusted forward into engagement with such blank, substantially as set forth.

19. In a phonograph, the combination, with the revolving phonogram-cylinder and the lead-screw, of the arm carrying the recorder or reproducer, a cutting-tool on such arm for reducing the surface of the phonogram or blank, and a guide-arm engaging the lead-screw and advancing the carrying-arm, substantially as set forth.

20. In a phonograph, the combination, with the revolving phonogram-cylinder, of the swinging arm carrying the recorder or reproducer, a cutting-tool also carried by said arm, a guide-rest, a screw for adjusting the position of the recorder or reproducer and said cutting-tool with relation to the phonogram or blank surface, and a yielding guide-block engaging with the lead-screw and advancing said carrying-arm, substantially as set forth.

21. In a phonograph, the combination, with the cylinder-shaft having a fine screw-thread, the phonogram-cylinder mounted on such shaft, a stationary guide-rod, a sleeve mounted on such guide-rod and capable of sliding and turning movements thereon, a guide-arm secured to said sleeve and having a screw-threaded guide-block engaging the screw-thread, and the holding-arm for the recorder or reproducer, also secured to said sleeve, substantially as set forth.

22. In a phonograph, the combination, with the cylinder-shaft having a fine screw-thread, the phonogram-cylinder mounted on such shaft, a stationary guide-rod, a sleeve mounted on such guide-rod and capable of sliding and turning movements thereon, a guide-arm secured to said sleeve and having a screw-threaded guide-block engaging the screw-thread, the holding-arm for the recorder or re-

producer, also secured to said sleeve, and a guide-rest for determining the rotary position of the guide-sleeve, substantially as set forth.

23. In a phonograph, the combination, with the cylinder-shaft having a fine screw-thread, the phonogram-cylinder mounted on such shaft, a guide-rod and sleeve, a guide-arm secured to said sleeve and having a screw-threaded yielding guide-block engaging the screw-thread, the holding-arm for the recorder or reproducer, also secured to said sleeve, and a guide-rest for determining the rotary position of the guide-sleeve, substantially as set forth.

24. In a phonograph, the phonogram-cylinder tapering throughout its length, substantially as set forth.

25. In a phonograph, the combination, with the cylinder-shaft mounted in bearings and projecting at one end beyond such bearings, of a smooth surface phonogram-cylinder tapering throughout its length and carried by the shaft outside of its bearings, substantially as set forth.

26. In a phonograph, the combination, with a tapering phonogram-cylinder, of two or more phonogram-blanks of different lengths having tapering bores adapted to fit said phonogram-cylinder and provided with cylindrical recording-surfaces, substantially as set forth.

27. In a phonograph, the combination, with a tapering phonogram-cylinder, of a phonogram having a tapering bore and a cylindrical outer surface held upon said cylinder by friction, substantially as set forth.

28. In a phonograph, the combination, with a holding-frame, of the recording and reproducing devices constructed each as a complete self-contained body removably attached to said holding-frame, substantially as set forth.

This specification signed and witnessed this 22d day of November, 1887.

THOS. A. EDISON.

Witnesses:

WILLIAM PELZER,

E. C. ROWLAND.

822 (No Model.)

E. OXLEY.

PHONOGRAPH.

No. 458,916. Patented Sept. 1, 1891.

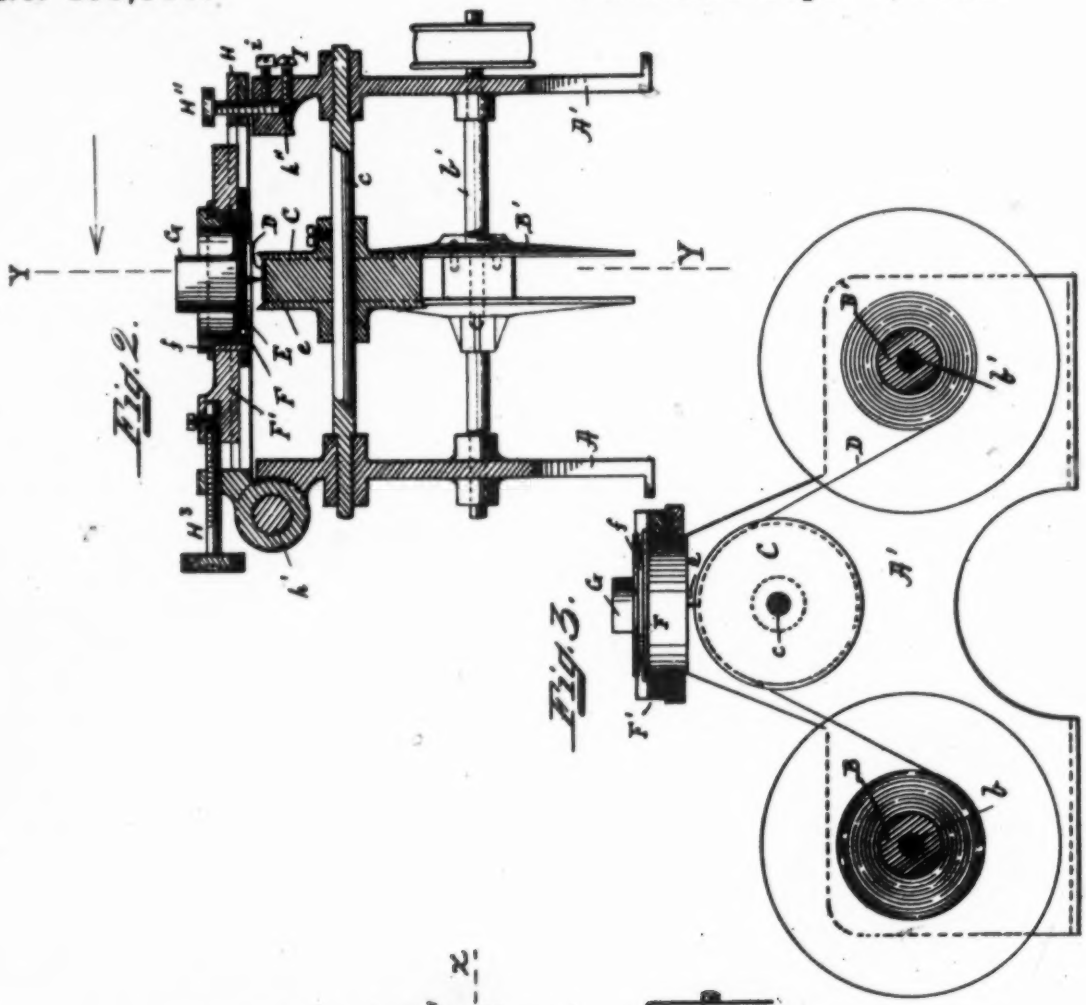

Fig. 2.

Fig. 3.

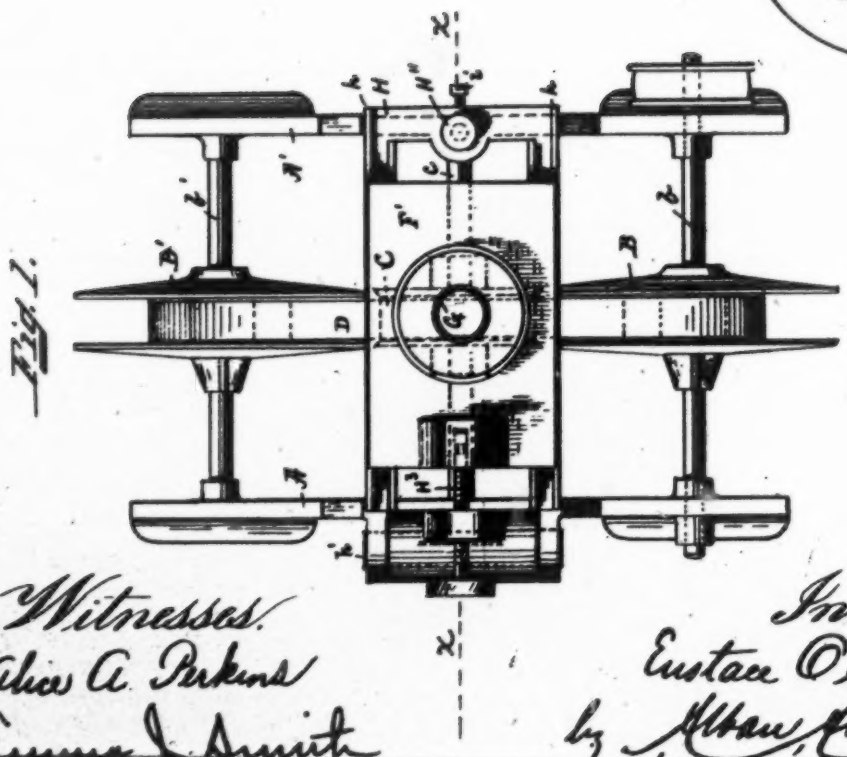

Fig. 1.

Witnesses.
Alice A. Perkins
Emma L. Smith

Inventor.
Eustace Oxley.
by Albert G. Davis his atty

UNITED STATES PATENT OFFICE.

EUSTACE OXLEY, OF BOSTON, MASSACHUSETTS.

PHONOGRAPH.

SPECIFICATION forming part of Letters Patent No. 458,916, dated September 1, 1891.

Application filed November 12, 1890. Serial No. 371,161. (No model.)

To all whom it may concern:

Be it known that I, EUSTACE OXLEY, a citizen of Great Britain, and a resident of Boston, in the county of Suffolk and State of Massachusetts, have invented new and useful Improvements in Phonographs, of which the following, taken in connection with the accompanying drawings, is a specification.

This invention relates to improvements in phonographs or speaking-machines; and it is carried out as follows, reference being had to the accompanying drawings, wherein—

Figure 1 represents a plan view of the invention. Fig. 2 represents a vertical section on the line X X shown in Fig. 1, and Fig. 3 represents a cross-section on the line Y Y shown in Fig. 2.

Similar letters refer to similar parts wherever they occur on the different parts of the drawings.

A and A′ are frames preferably made of metal and secured together at a proper distance apart.

B and B′ are reels secured to the respective shafts *b* and *b′*, journaled in the frames A and A′, as shown.

C is a loosely-journaled guide-roller located on a shaft *c*, as shown in Figs. 2 and 3.

D is a tape or ribbon, which is guided and carried around a a portion of the guide-roller C from the reel B to the reel B′, or vice versa, during the operation of the phonograph. The said ribbon D is coated on its upper side with wax or suitable composition, or other ductile material, adapted to receive impressions from the stylus when the latter is agitated.

Above the guide-roller C is located the vibratory diaphragm E, having secured to its under side the usual stylus or needle *e*, or equivalent recording device. The said diaphragm is preferably secured within the case F by means of a screw-cap *f*, to which the speaking-tube G is connected, as is common in phonographic apparatus.

In practice I make the case F and its diaphragm E adjustable in a direction parallel with the guide-roller shaft *c*, so as to change the position of the stylus or needle *e* laterally ribbon, thus causing its entire surface to be utilized for receiving indentures or impressions from the stylus or needle during the vibrating movement of the diaphragm caused by the operator speaking against it.

In the drawings I have shown the case F as attached to a plate F′, which is adapted to slide in and between guide-ribs *h h* on the cover H, which latter is preferably hinged at *h′* to the frame A, and provided in its opposite end with a regulating-screw H″, screwed through said cover H and having its tapering lower end *h″* adapted to rest against the lateral adjustable screw I for the purpose of adjusting the position of the stylus or needle properly in relation to the ribbon D where it passes over the roller C, as shown.

i is a set-screw for securing the cover H in position after it has been adjusted for the purpose above mentioned.

H³ is a feed-screw for adjusting the position of the slide F′ with its diaphragm and stylus relative to the ribbon D, for the purpose set forth.

The reels B and B′ may be provided with suitable tension devices, so as to cause the ribbon or tape D to be held taut while passing around the guide-roller C, as it is being wound off from one reel and wound onto the other, during the use of the phonograph. Such tension device is, however, not shown in the drawings.

The reels B and B′ may be set in motion by clock-work or other well-known automatic or other mechanism without departing from the essence of my invention, such mechanism being, however, not represented in the drawings.

The operation of the improved phonograph is as follows: We will suppose that the ribbon D is fed from one reel to the other and around a portion of the guide or guide-roller C. If during such movement of the ribbon the diaphragm E should be set in vibration by acoustic sound-waves, the human voice, or other sounds, the vibratory movements of the stylus or needle will be recorded on the plastic or ductile surface of the traveling ribbon D. After the entire length of the rib-

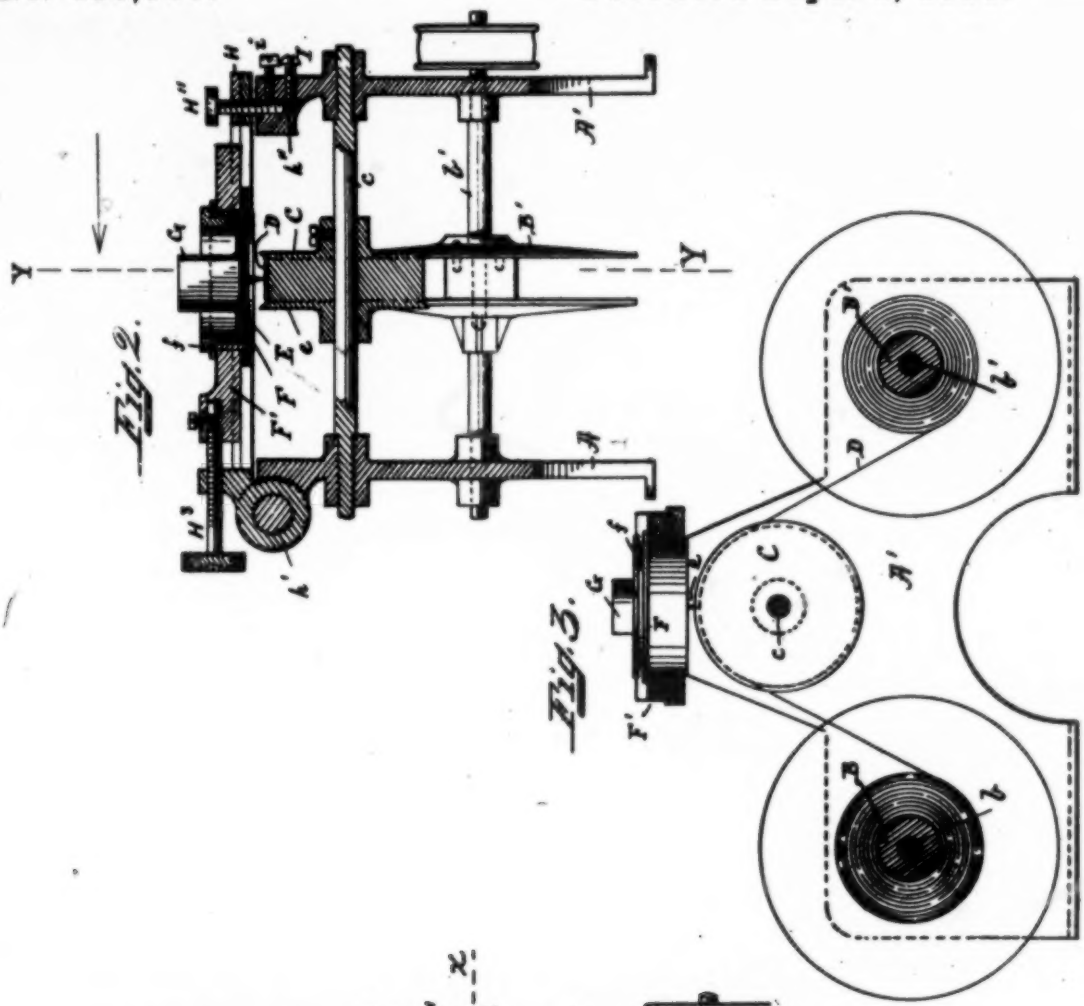

Fig. 2.

Fig. 3.

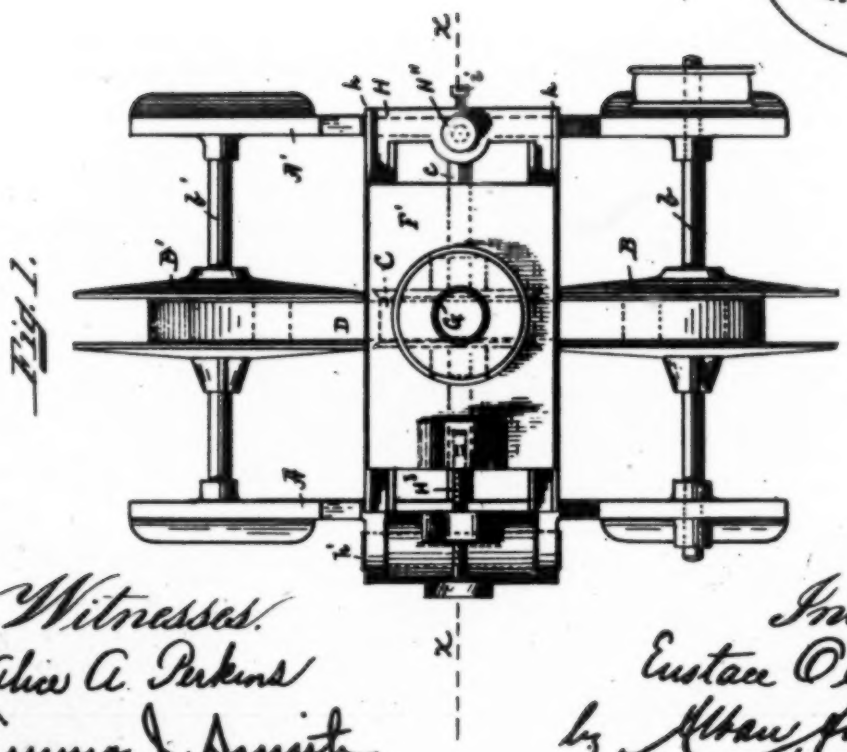

Fig. 1.

Witnesses.
Alice A. Perkins
Emma J. Smith

Inventor.
Eustace Oxley.
by Albert G. Davis his atty.

UNITED STATES PATENT OFFICE.

EUSTACE OXLEY, OF BOSTON, MASSACHUSETTS.

PHONOGRAPH.

SPECIFICATION forming part of Letters Patent No. 458,916, dated September 1, 1891.

Application filed November 12, 1890. Serial No. 371,161. (No model.)

To all whom it may concern:

Be it known that I, EUSTACE OXLEY, a citizen of Great Britain, and a resident of Boston, in the county of Suffolk and State of Massachusetts, have invented new and useful Improvements in Phonographs, of which the following, taken in connection with the accompanying drawings, is a specification.

This invention relates to improvements in phonographs or speaking-machines; and it is carried out as follows, reference being had to the accompanying drawings, wherein—

Figure 1 represents a plan view of the invention. Fig. 2 represents a vertical section on the line X X shown in Fig. 1, and Fig. 3 represents a cross-section on the line Y Y shown in Fig. 2.

Similar letters refer to similar parts wherever they occur on the different parts of the drawings.

A and A′ are frames preferably made of metal and secured together at a proper distance apart.

B and B′ are reels secured to the respective shafts *b* and *b′*, journaled in the frames A and A′, as shown.

C is a loosely-journaled guide-roller located on a shaft *c*, as shown in Figs. 2 and 3.

D is a tape or ribbon, which is guided and carried around a a portion of the guide-roller C from the reel B to the reel B′, or vice versa, during the operation of the phonograph. The said ribbon D is coated on its upper side with wax or suitable composition, or other ductile material, adapted to receive impressions from the stylus when the latter is agitated.

Above the guide-roller C is located the vibratory diaphragm E, having secured to its under side the usual stylus or needle *e*, or equivalent recording device. The said diaphragm is preferably secured within the case F by means of a screw-cap *f*, to which the speaking-tube G is connected, as is common in phonographic apparatus.

In practice I make the case F and its diaphragm E adjustable in a direction parallel with the guide-roller shaft *c*, so as to change the position of the stylus or needle *e* laterally in relation to the tape or ribbon D after a record has been made on the latter throughout its length, by which a series of parallel records may be made successively on the said ribbon, thus causing its entire surface to be utilized for receiving indentures or impressions from the stylus or needle during the vibrating movement of the diaphragm caused by the operator speaking against it.

In the drawings I have shown the case F as attached to a plate F′, which is adapted to slide in and between guide-ribs *h h* on the cover H, which latter is preferably hinged at *h′* to the frame A, and provided in its opposite end with a regulating-screw H″, screwed through said cover H and having its tapering lower end *h″* adapted to rest against the lateral adjustable screw I for the purpose of adjusting the position of the stylus or needle properly in relation to the ribbon D where it passes over the roller C, as shown.

i is a set-screw for securing the cover H in position after it has been adjusted for the purpose above mentioned.

H³ is a feed-screw for adjusting the position of the slide F′ with its diaphragm and stylus relative to the ribbon D, for the purpose set forth.

The reels B and B′ may be provided with suitable tension devices, so as to cause the ribbon or tape D to be held taut while passing around the guide-roller C, as it is being wound off from one reel and wound onto the other, during the use of the phonograph. Such tension device is, however, not shown in the drawings.

The reels B and B′ may be set in motion by clock-work or other well-known automatic or other mechanism without departing from the essence of my invention, such mechanism being, however, not represented in the drawings.

The operation of the improved phonograph is as follows: We will suppose that the ribbon D is fed from one reel to the other and around a portion of the guide or guide-roller C. If during such movement of the ribbon the diaphragm E should be set in vibration by acoustic sound-waves, the human voice, or other sounds, the vibratory movements of the stylus or needle will be recorded on the plastic or ductile surface of the traveling ribbon D. After the entire length of the ribbon has thus been indented I adjust the position of the diaphragm-case, its diaphragm, and stylus relative to the guide-roller C, so as to bring a fresh portion of the said ribbon be-

low the said vibratory stylus, and so on until the entire length and width of the ribbon has been used for the purpose mentioned. By feeding the indented ribbon in contact with the stylus *e* the diaphragm is caused to vibrate, and thereby to reproduce the original sound, as is the case in phonographs or speaking-machines generally.

The advantages of a tape or ribbon as a recording medium over the usual cylinders are as follows: The machine is very much simplified in its construction. The capacity of the recording medium is materially increased. The recording medium is much lighter, less bulky and fragile than the ordinary rolls, and is therefore preferable for transportation by mail or otherwise, and said recording medium is not affected by variations in temperature liable to make the ordinary rolls untrue and more or less inoperative and defective.

Having thus fully described the nature, construction, and operation of my invention, I wish to secure by Letters Patent and claim—

1. In a phonograph or speaking-machine, the combination, with a flexible ribbon having a ductile surface adapted to receive impressions from a stylus, reels for causing the ribbon to travel lengthwise, and a rotating support arranged under the ribbon between the reels, of a cover-plate hinged at one end and provided with a sliding plate, and having a vibratory diaphragm and a stylus to act upon the ribbon, and means for adjusting the sliding plate on the hinged cover-plate for moving the diaphragm and stylus in a direction at right angles to the line of travel of the ribbon for recording sounds in parallel lines thereupon, substantially as described.

2. In a phonograph or speaking-machine, the combination of a frame, a pair of reels journaled in the frame, a flexible ribbon having a ductile surface and engaging the reels, a rotating ribbon-support between the reels, a cover-plate hinged at one extremity and provided at the opposite extremity with an adjusting-screw by which to adjust the cover-plate to and from the ribbon, a slide-plate mounted on the cover-plate and provided with a vibratory diaphragm having a stylus, and a set-screw for adjusting the sliding plate to move the diaphragm and stylus in a direction at right angles to the line of travel of the ribbon for recording sounds in parallel lines thereupon, substantially as described.

In testimony whereof I have signed my name to this specification, in the presence of two subscribing witnesses, on this 3d day of November, A. D. 1890.

EUSTACE OXLEY.

Witnesses:
ALBAN ANDREN,
ALICE A. PERKINS.

826

(No Model.) 7 Sheets—Sheet 1.

T. A. EDISON.

PHONOGRAPH.

No. 499,879. Patented June 20, 1893.

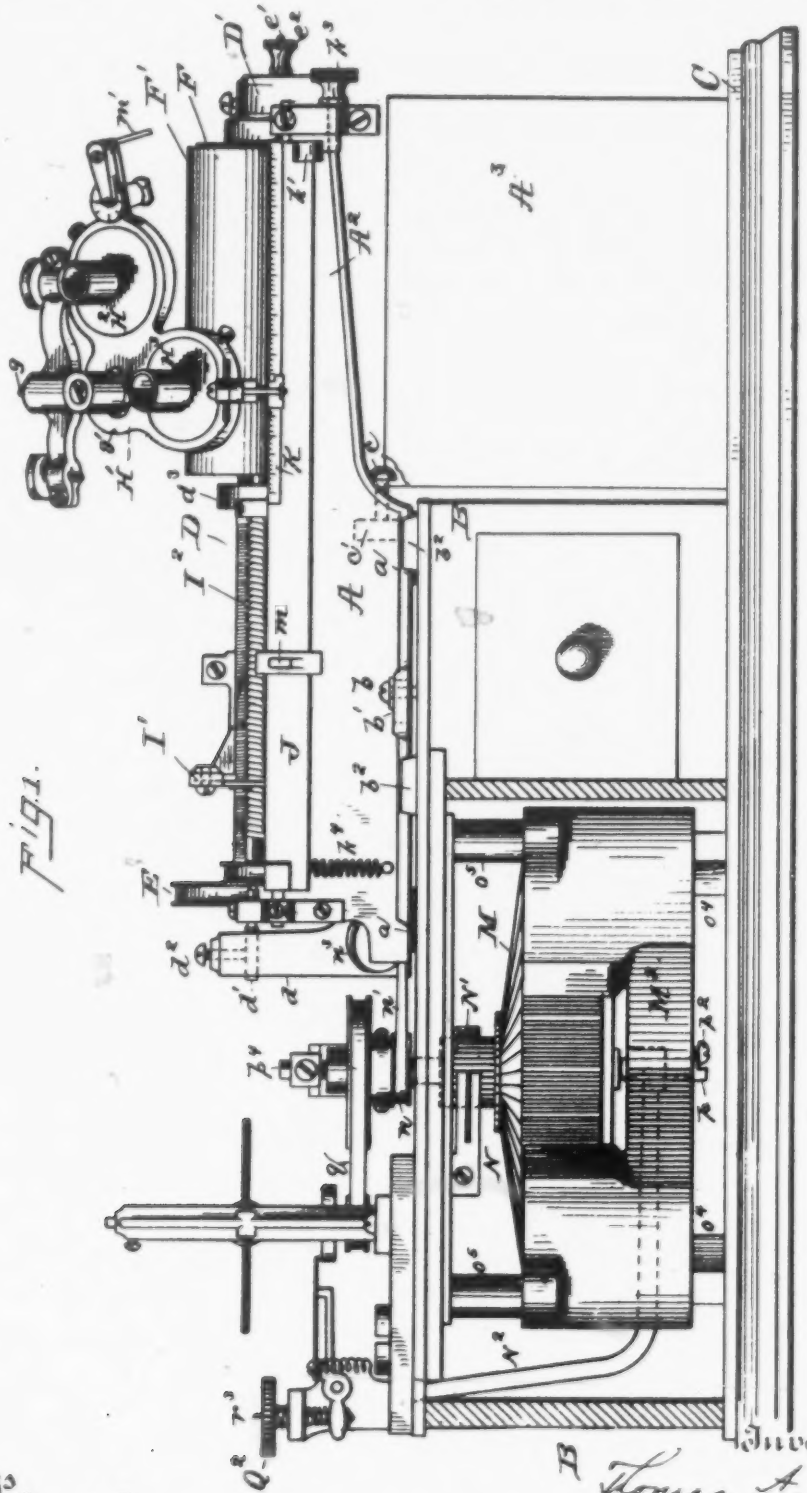

Fig. 1.

Witnesses
E. L. Howland

Inventor
Thomas A. Edison.

(No Model.) 7 Sheets—Sheet 1.

T. A. EDISON.

PHONOGRAPH.

No. 499,879. Patented June 20, 1893.

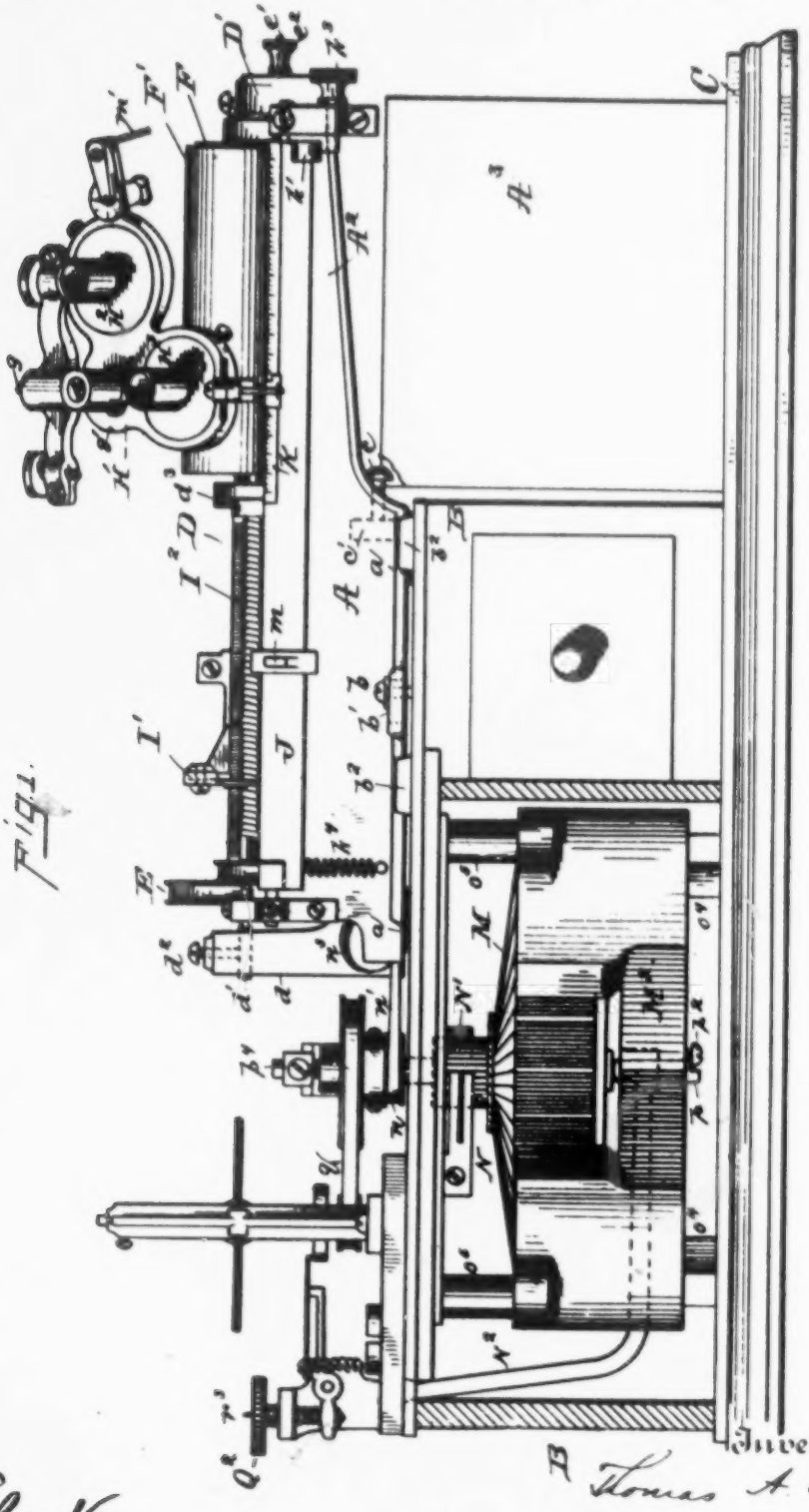

Fig. 1.

Witnesses
E. C. Howland
William Pitzer

Inventor
Thomas A. Edison.
By his Attorneys
Dyer & Seely.

(No Model.) 7 Sheets—Sheet 2.

T. A. EDISON.

PHONOGRAPH.

No. 499,879. Patented June 20, 1893.

Fig 2.

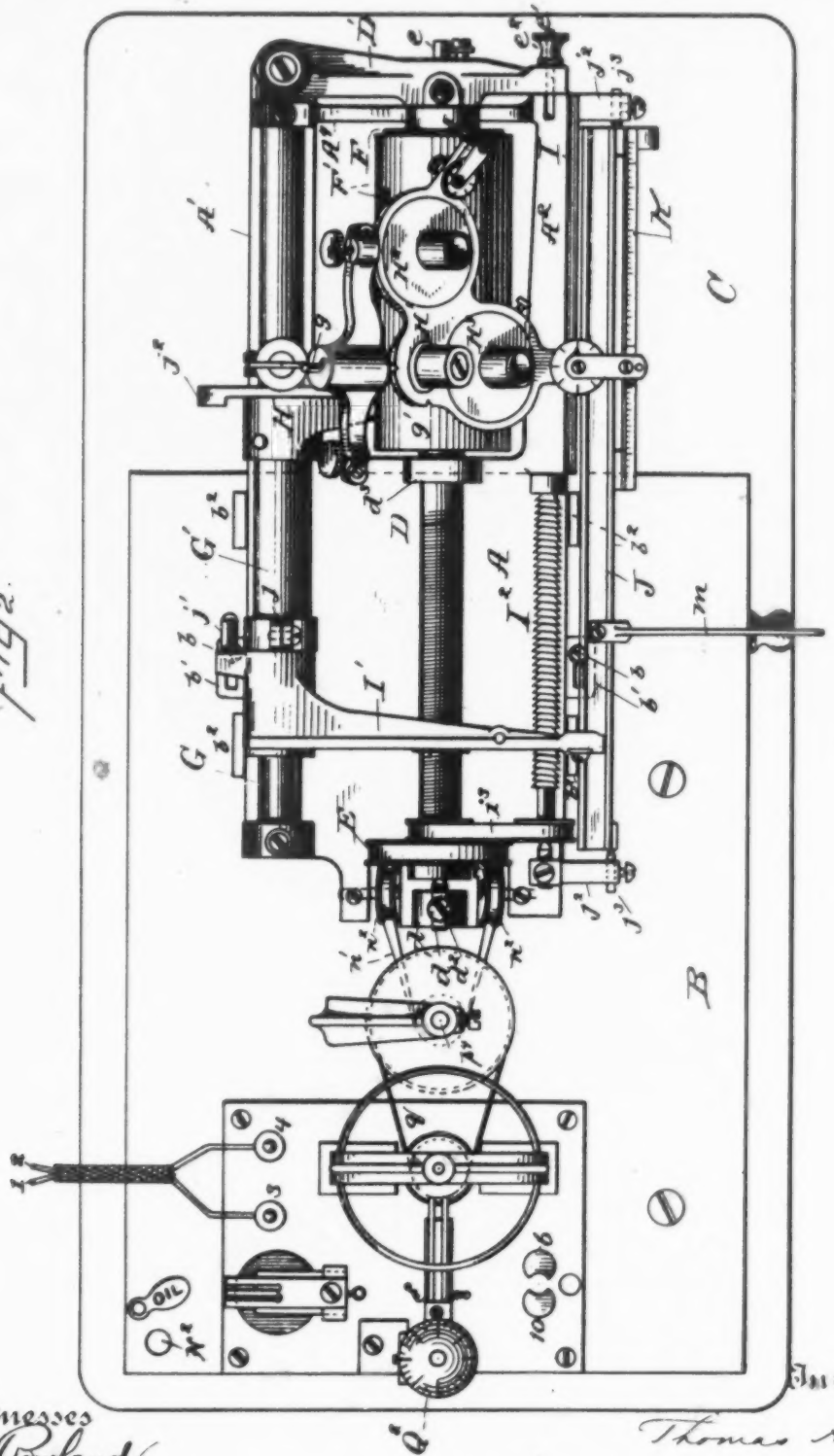

Witnesses
E. C. Rowland
William Pfizer

Inventor
Thomas A. Edison.
By his Attorneys
Dyer & Seely

(No Model.) 7 Sheets—Sheet 3.

T. A. EDISON.

PHONOGRAPH.

No. 499,879. Patented June 20, 1893.

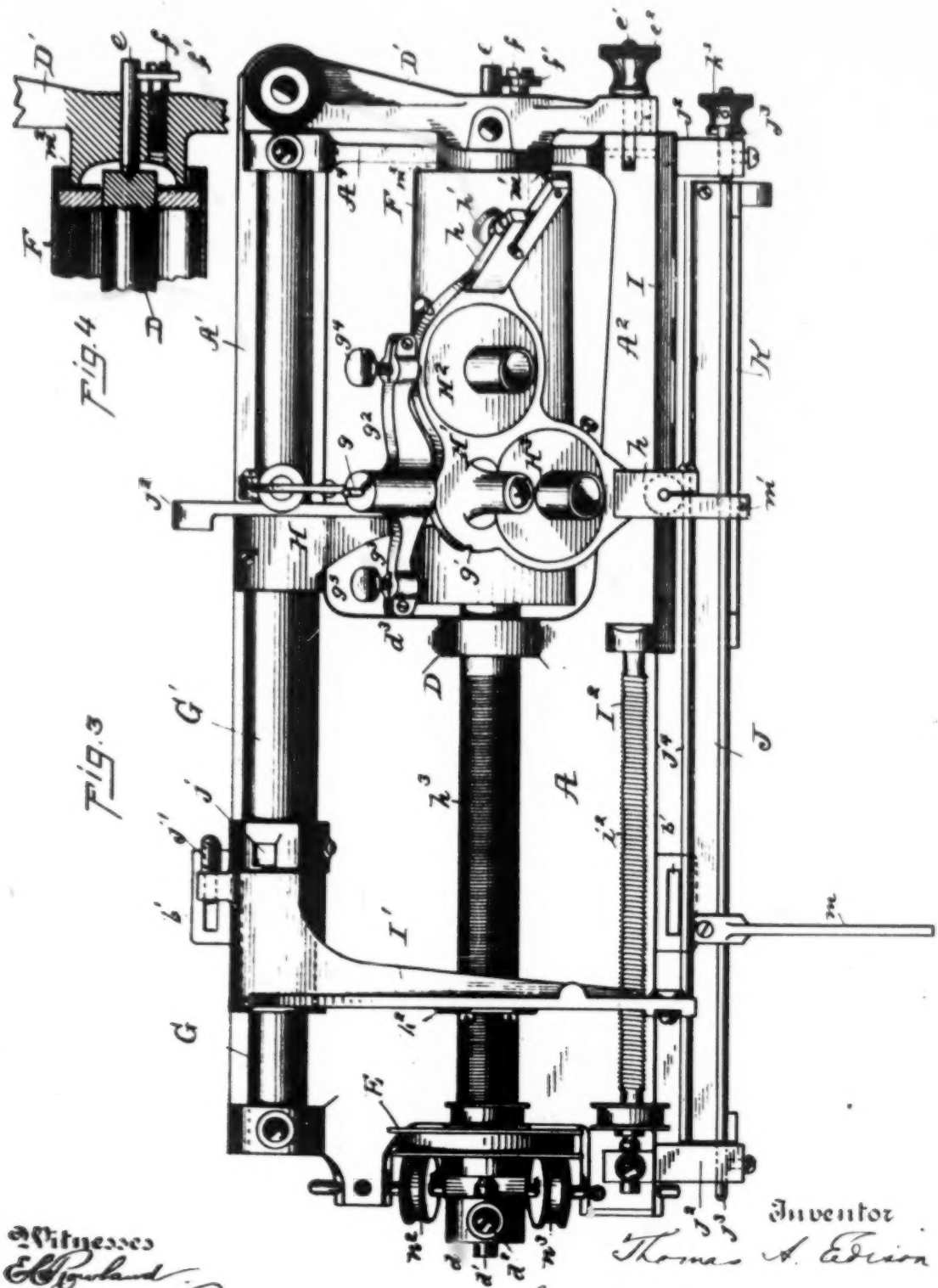

Witnesses
E. C. Rowland
[illegible]

Inventor
Thomas A. Edison
By his Attorneys

(No Model.) 7 Sheets—Sheet 3.

T. A. EDISON.

PHONOGRAPH.

No. 499,879. Patented June 20, 1893.

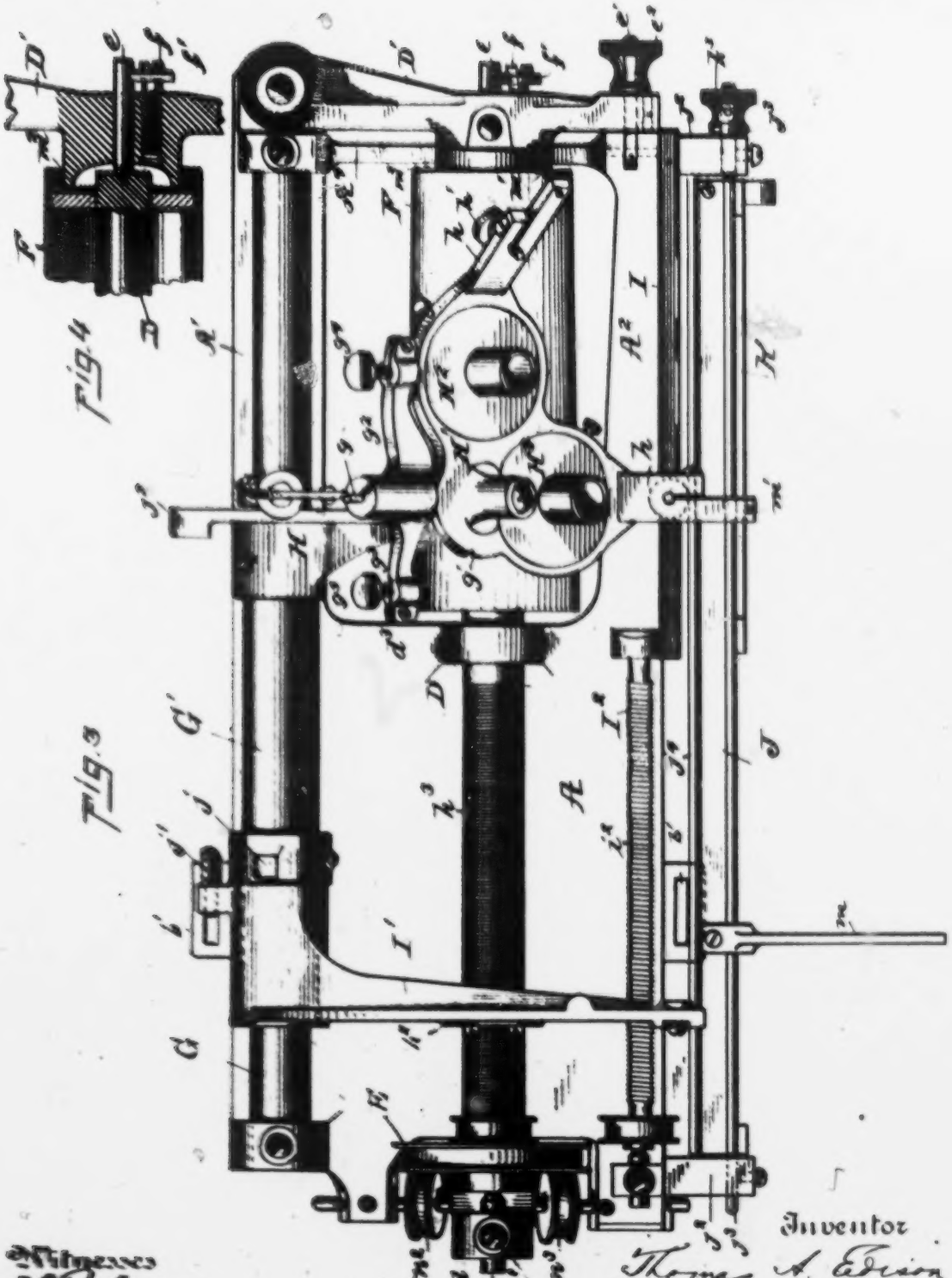

Witnesses
E. S. Ryland
William Ayre

Inventor
Thomas A. Edison

By his Attorneys
Dyer & Seely.

832

(No Model.) 7 Sheets—Sheet 4.

T. A. EDISON.

PHONOGRAPH.

No. 499,879. Patented June 20, 1893.

Fig. 5.

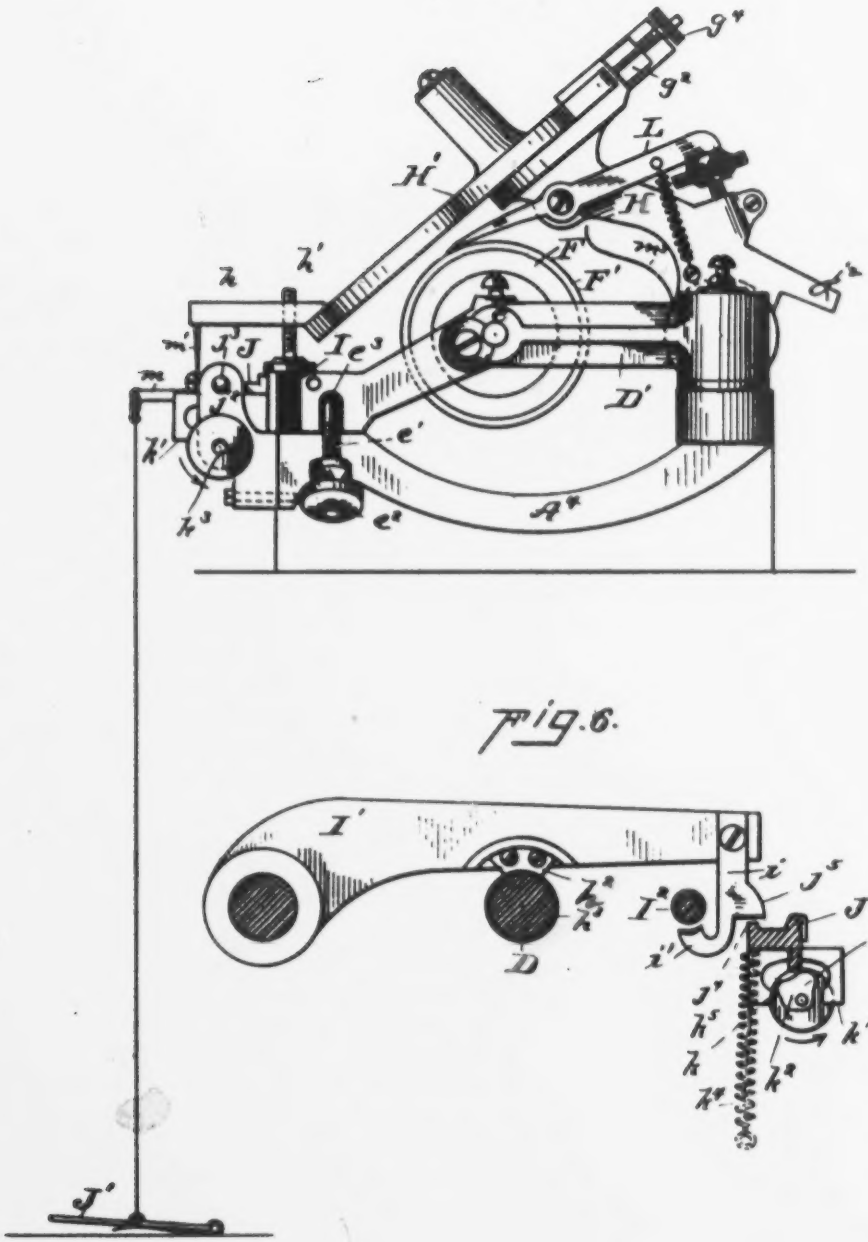

Fig. 6.

Witnesses
E. C. Rowland.
William Pelzer

Inventor
Thomas A. Edison.

By his Attorneys
Dyer & Seely.

834

(No Model.) 7 Sheets—Sheet 5.

T. A. EDISON.

PHONOGRAPH.

No. 499,879. Patented June 20, 1893.

Fig. 7.

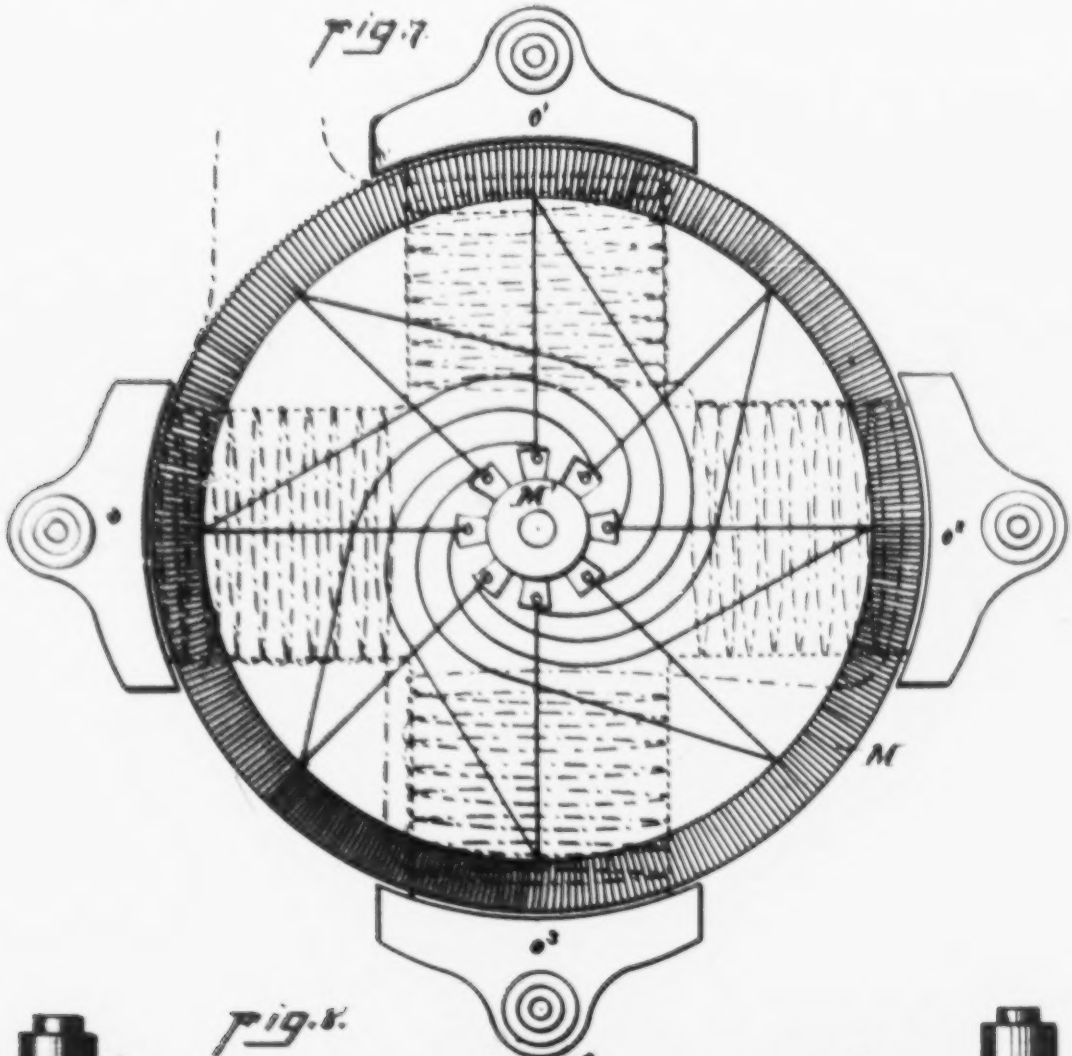

Fig. 8.

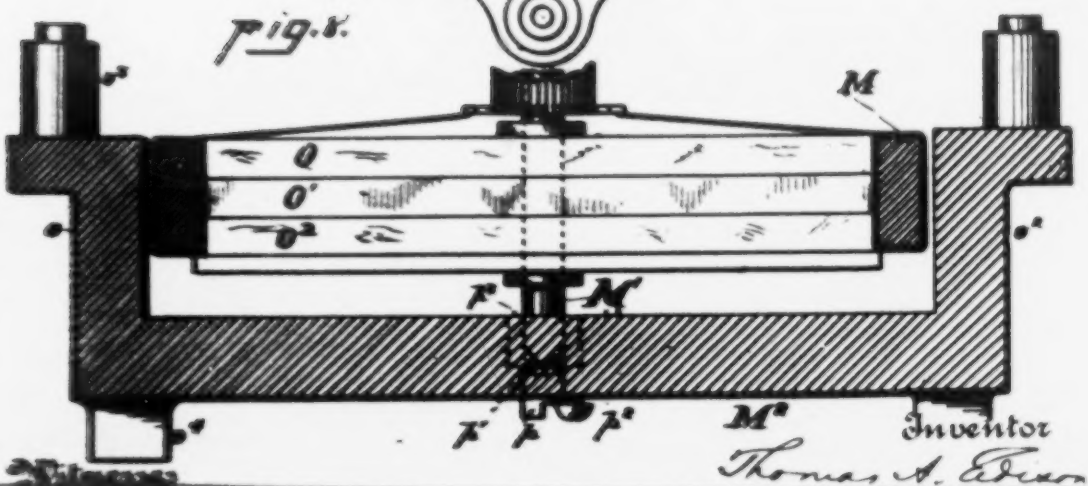

Witnesses

Inventor
Thomas A. Edison

(No Model.) 7 Sheets—Sheet 5.

T. A. EDISON.

PHONOGRAPH.

No. 499,879. Patented June 20, 1893.

Fig. 7.

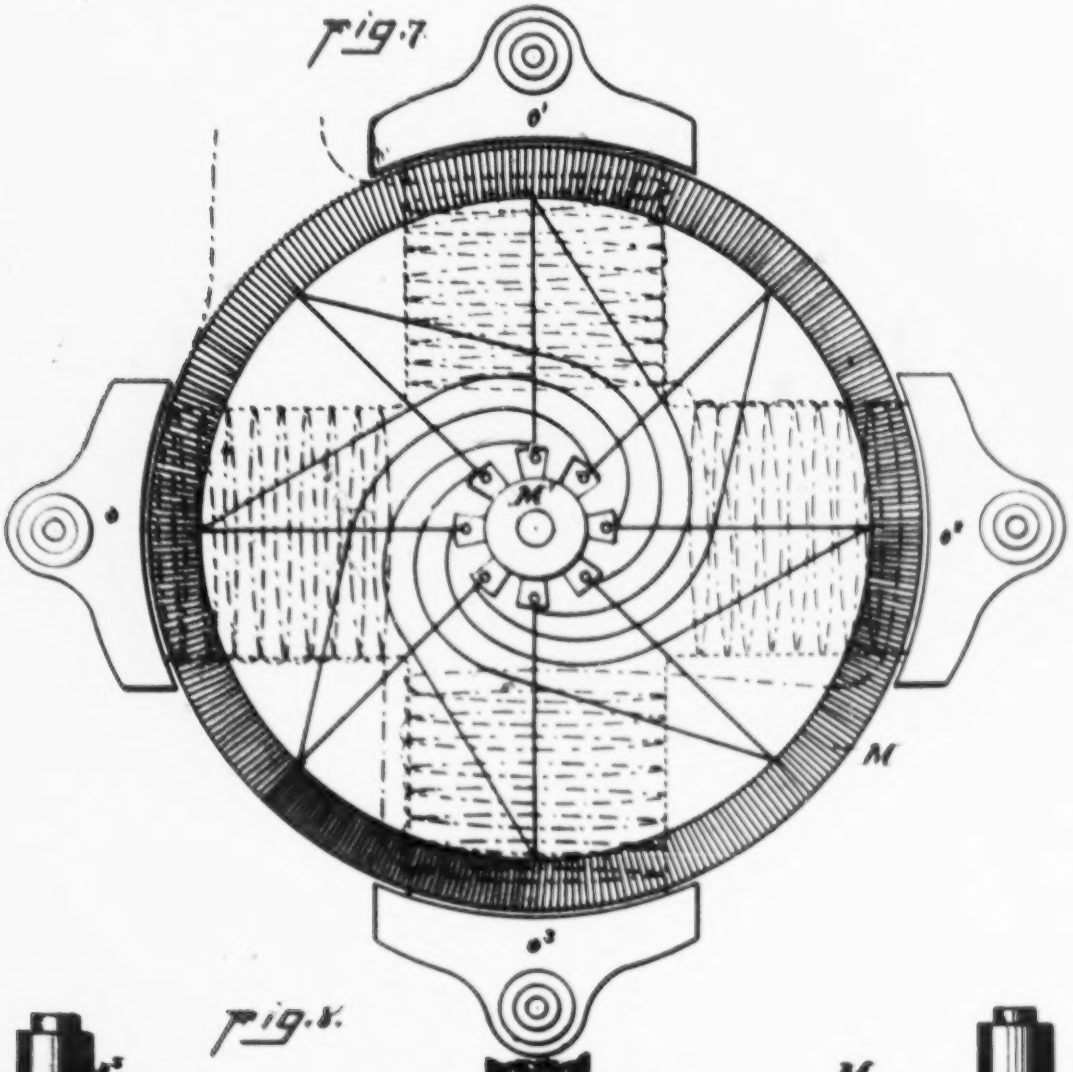

Fig. 8.

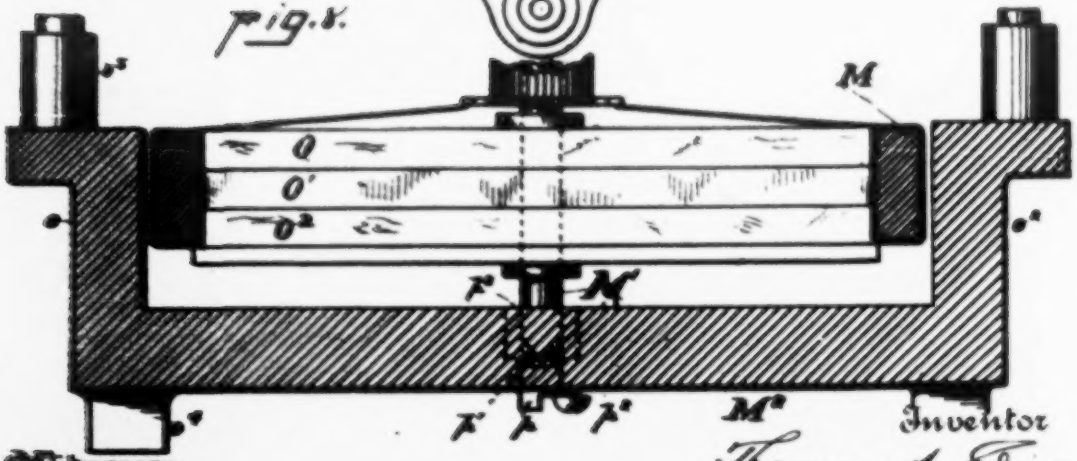

Witnesses:
William Ofer

Inventor
Thomas A. Edison.

By his Attorneys
Dyer & Seely

7 Sheets—Sheet 6.

T. A. EDISON.

PHONOGRAPH.

No. 499,879. Patented June 20, 1893.

Fig. 9

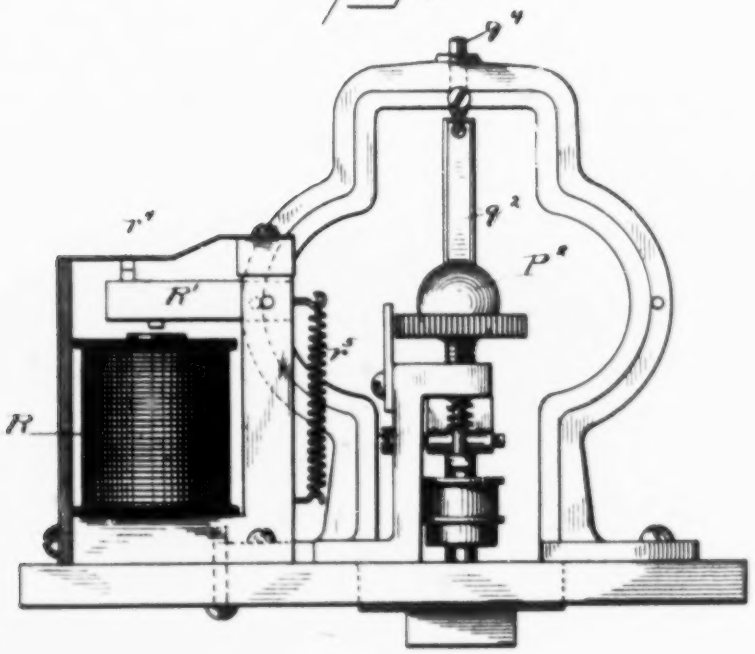

Fig. 11.

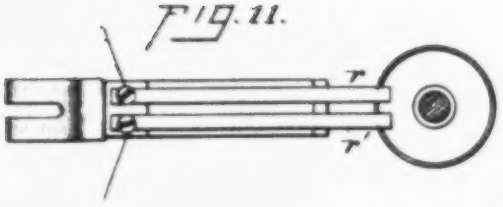

Fig. 10.

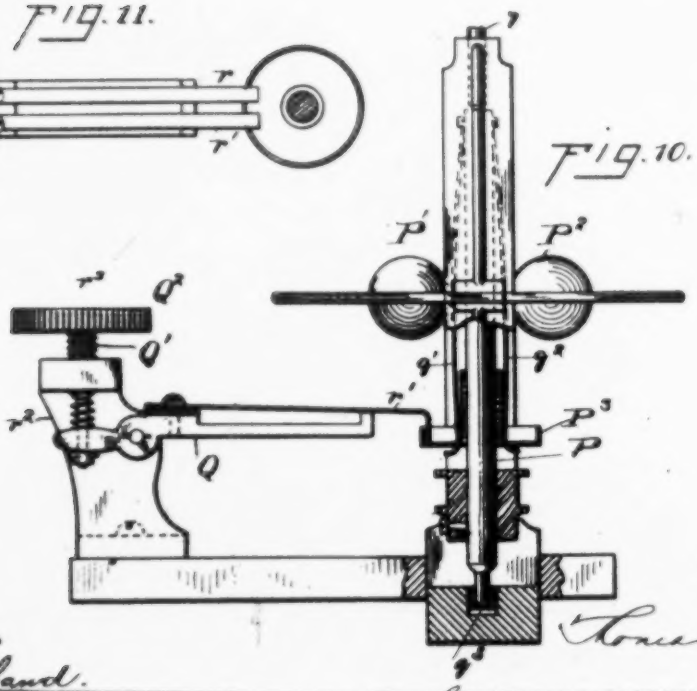

Witnesses
E. C. Rowland.

Inventor.
Thomas A. Edison

T. A. EDISON.

PHONOGRAPH.

No. 499,879. Patented June 20, 1893.

Fig. 9.

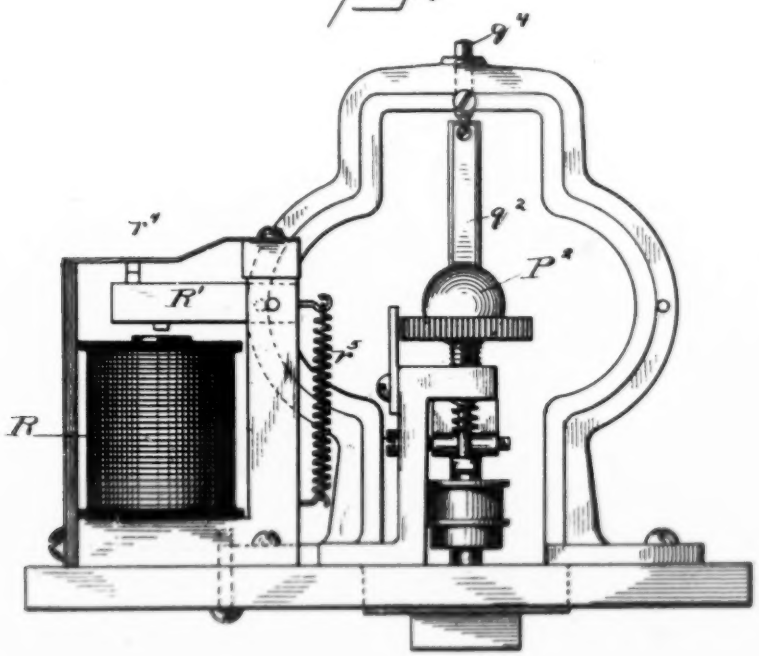

Fig. 11.

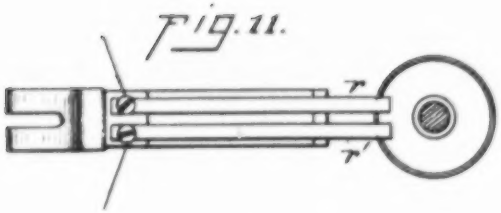

Fig. 10.

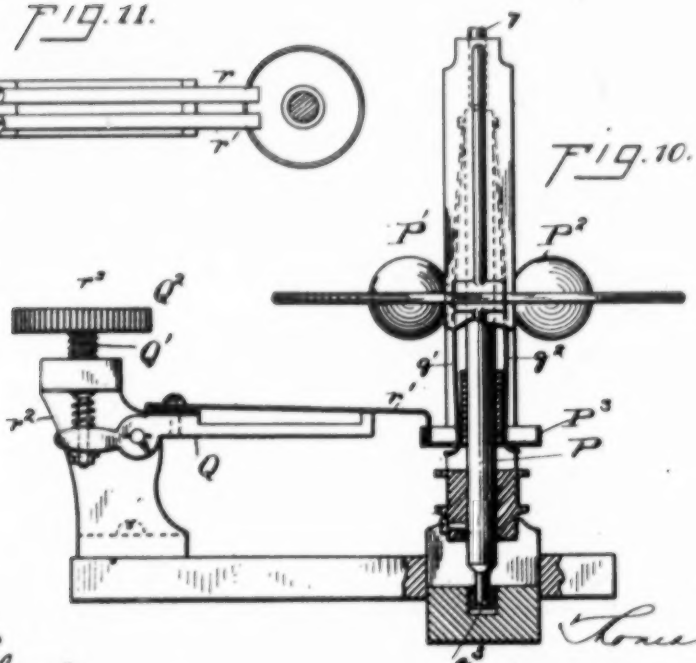

Witnesses
E. C. Rowland.
William Pelzer

Inventor,
Thomas A. Edison

By his Attorneys
Dyer & Seely.

(No Model.) 7 Sheets—Sheet 7.

T. A. EDISON.

PHONOGRAPH.

No. 499,879. Patented June 20, 1893.

Fig. 12.

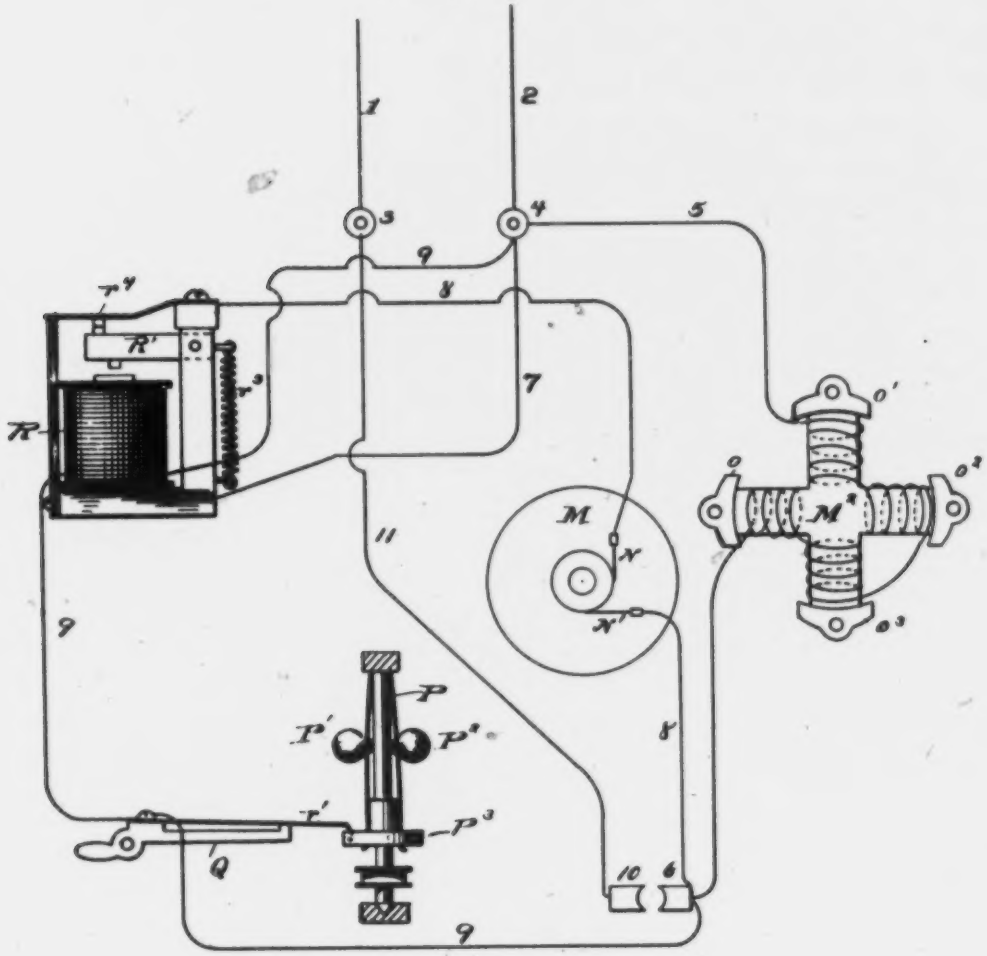

Witnesses
E. C. Rowland.

Inventor
Thomas A. Edison

By his Attorneys

UNITED STATES PATENT OFFICE.

THOMAS A. EDISON, OF LLEWELLYN PARK, NEW JERSEY, ASSIGNOR TO THE EDISON PHONOGRAPH COMPANY, OF NEW JERSEY.

PHONOGRAPH.

SPECIFICATION forming part of Letters Patent No. 499,879, dated June 20, 1893.

Application filed July 30, 1888. Serial No. 281,453. (No model.)

To all whom it may concern:

Be it known that I, THOMAS A. EDISON, a citizen of the United States, residing at Llewellyn Park, in the county of Essex and State of New Jersey, have invented a certain new and useful Improvement in Phonographs, (Case No. 792,) of which the following is a specification.

My invention relates to improvements in the mechanism of my phonograph, whereby it is made more convenient and efficient in operation.

The invention consists in the various novel devices and combinations of parts and in the method as fully hereinafter explained and pointed out by the claims.

In the accompanying drawings forming a part hereof,—Figure 1, is a front elevation of the complete machine with the front of the case broken away to show the driving motor. Fig. 2, is a top view of the complete machine. Fig. 3, is a top view of the phonograph proper on a somewhat larger scale omitting the driving and governing devices. Fig. 4, is a sectional view illustrating the movable center for supporting the outer end of the phonogram cylinder carrying shaft. Fig. 5, is an end view of the phonograph. Fig. 6, is a sectional view showing the traveler arm and connected parts. Fig. 7, is a top view of the driving motor. Fig. 8, is a sectional view of such motor. Fig. 9, is an end elevation of the speed governor. Fig. 10, is an elevation and partial section of the governor taken at right angles to Fig. 9. Fig. 11, is a top view of the contact arm of the governor; and Fig. 12, is a view principally in diagram showing the circuit connections of the electric motor and governor.

A is the frame of the phonograph proper which is mounted upon a box B, which in turn is mounted upon a suitable base C. The frame A is supported upon one end of the box B so that it overhangs such box to make room for a receptacle A^3, which stands upon the base C under the overhanging phonograph frame extent, prevent the vibrations of the motor contained within the box B from being transferred to the phonograph frame to the injury of the recording or reproduction of the sounds.

The frame A is secured to the box B by means of screws *b* which pass through slotted lugs *b'* on the frame A into the top of the box B. Lugs b^2 on the base B rise up on each side of the bottom edge of the frame A so as to hold such frame against lateral displacement. A screw *c* passing through a part of the frame A sets against a lug *c'* on the base B (shown in dotted lines in Fig. 1).

The screw *c* serves to adjust the frame A on the box B for the purpose of tightening the driving belt as will be presently explained, and the lugs *b'* are slotted to permit of this movement, the screws *b* being finally tightened after the proper adjustment of the driving belt has been secured.

D is the shaft of the phonograph, which is arranged horizontally and longitudinally upon the frame A. This shaft is held upon stationary centers so as to turn true and for the purpose of compensating for any wear. At the inner end of the frame A a standard *d* rises, through which passes the adjustable and removable centering pin *d'*, which is held by a set screw d^2 passing through the top of the standard *d*. At the outer end of the phonograph shaft D the centering pin *e* is carried by a swinging arm D'. This swinging arm D' is pivoted upon a side extension A' of the frame A at one end and at its other end it is removably attached to a side extension A^2 of the frame A by means of a bolt *e'* and a thumb nut e^2. This bolt *e'* is pivoted on the end of the side extension A^2 of the frame A so as to swing vertically and it enters a slot e^3 in the end of the swinging arm D'. By loosening the nut e^2, the bolt *e'* can be swung downwardly out of the slot e^3 when the arm D' is free to be swung upon its pivot thus exposing the outer end of the phonograph shaft D, while by swinging the arm D' inwardly, the center *e* will properly engage with the end

(No Model.) 7 Sheets—Sheet 1.

T. A. EDISON.

PHONOGRAPH.

No. 499,879. Patented June 20, 1893.

Fig. 1R.

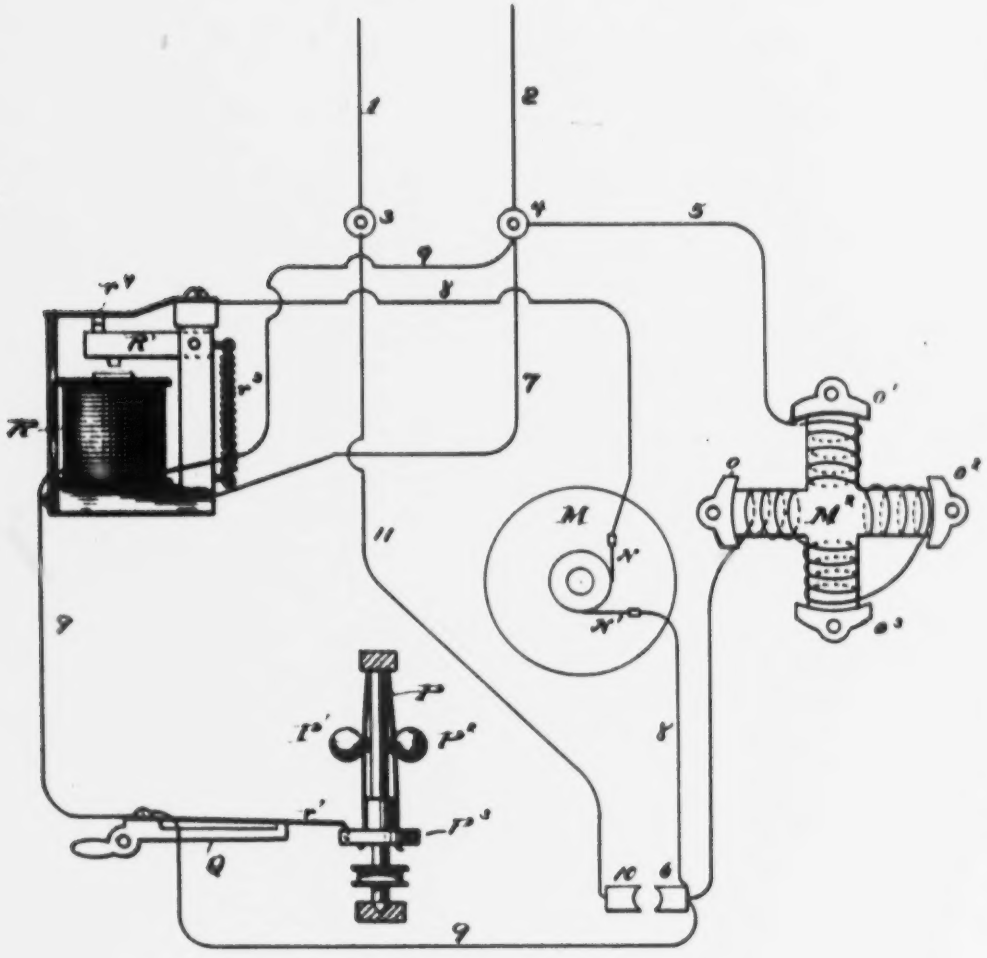

Witnesses
E. C. Rowland.
William Pyle

Inventor
Thomas A. Edison

By his Attorneys
Dyer & Seely.

UNITED STATES PATENT OFFICE.

THOMAS A. EDISON, OF LLEWELLYN PARK, NEW JERSEY, ASSIGNOR TO THE EDISON PHONOGRAPH COMPANY, OF NEW JERSEY.

PHONOGRAPH.

SPECIFICATION forming part of Letters Patent No. 499,879, dated June 20, 1893.

Application filed July 30, 1888. Serial No. 281,463. (No model.)

To all whom it may concern:

Be it known that I, THOMAS A. EDISON, a citizen of the United States, residing at Llewellyn Park, in the county of Essex and State of New Jersey, have invented a certain new and useful Improvement in Phonographs, (Case No. 792,) of which the following is a specification.

My invention relates to improvements in the mechanism of my phonograph, whereby it is made more convenient and efficient in operation.

The invention consists in the various novel devices and combinations of parts and in the method as fully hereinafter explained and pointed out by the claims.

In the accompanying drawings forming a part hereof,—Figure 1, is a front elevation of the complete machine with the front of the case broken away to show the driving motor. Fig. 2, is a top view of the complete machine. Fig. 3, is a top view of the phonograph proper on a somewhat larger scale omitting the driving and governing devices. Fig. 4, is a sectional view illustrating the movable center for supporting the outer end of the phonogram cylinder carrying shaft. Fig. 5, is an end view of the phonograph. Fig. 6, is a sectional view showing the traveler arm and connected parts. Fig. 7, is a top view of the driving motor. Fig. 8, is a sectional view of such motor. Fig. 9, is an end elevation of the speed governor. Fig. 10, is an elevation and partial section of the governor taken at right angles to Fig. 9. Fig. 11, is a top view of the contact arm of the governor; and Fig. 12, is a view principally in diagram showing the circuit connections of the electric motor and governor.

A is the frame of the phonograph proper which is mounted upon a box B, which in turn is mounted upon a suitable base C. The frame A is supported upon one end of the box B so that it overhangs such box to make room for a receptacle A^3, which stands upon the base C under the overhanging phonograph frame and receives the shavings which are cut from the phonogram cylinder.

Between the phonograph frame A and the box B are placed cushions *a* of elastic material such as soft rubber, which, to a desirable extent, prevent the vibrations of the motor contained within the box B from being transferred to the phonograph frame to the injury of the recording or reproduction of the sounds.

The frame A is secured to the box B by means of screws *b* which pass through slotted lugs *b'* on the frame A into the top of the box B. Lugs b^2 on the base B rise up on each side of the bottom edge of the frame A so as to hold such frame against lateral displacement. A screw *c* passing through a part of the frame A sets against a lug *c'* on the base B (shown in dotted lines in Fig. 1).

The screw *c* serves to adjust the frame A on the box B for the purpose of tightening the driving belt as will be presently explained, and the lugs *b'* are slotted to permit of this movement, the screws *b* being finally tightened after the proper adjustment of the driving belt has been secured.

D is the shaft of the phonograph, which is arranged horizontally and longitudinally upon the frame A. This shaft is held upon stationary centers so as to turn true and for the purpose of compensating for any wear. At the inner end of the frame A a standard *d* rises, through which passes the adjustable and removable centering pin *d'*, which is held by a set screw d^2 passing through the top of the standard *d*. At the outer end of the phonograph shaft D the centering pin *e* is carried by a swinging arm D'. This swinging arm D' is pivoted upon a side extension A' of the frame A at one end and at its other end it is removably attached to a side extension A^2 of the frame A by means of a bolt *e'* and a thumb nut e^2. This bolt *e'* is pivoted on the end of the side extension A^2 of the frame A so as to swing vertically and it enters a slot e^3 in the end of the swinging arm D'. By loosening the nut e^2, the bolt *e'* can be swung downwardly out of the slot e^3 when the arm D' is free to be swung upon its pivot thus exposing the outer end of the phonograph shaft D, while by swinging the arm D' inwardly, the center *e* will properly engage with the end of the shaft D and by lifting the bolt *e'* and tightening the thumb nut e^2 the arm D' will be fastened rigidly against the end of the side extension A^2 of the frame A. To prevent the shaft D from too great a displacement when the arm D' is

swung outwardly, it passes through a slotted standard d^2, which rises from the base A and encircles the shaft D loosely.

The shaft D is prevented from longitudinal displacement by means of the pulley E which is secured to the inner end of the shaft D and extends below the top of the frame A, so that when the arm D' is swung outwardly the pulley E will prevent the inner end of the shaft from disengaging totally from the center d^2 by reason of its impingement against the base A.

The center *e* is a pin which passes through the arm D' and is made adjustable by means of a screw *f* which turns into the arm D' and has a flange *f'* on its head which engages with a slot in the side of the pin *e*. By turning the screw *f* it will be seen that the center pin *e* will be adjusted and this without turning the center pin; the turning of the center pin might be attended with a disturbance of the relative adjustment of the parts.

Upon the shaft D between the standard d^2 and the swinging arm D' is mounted the phonogram cylinder F. This is preferably a cylinder having a slight taper on its external surface, its smaller end being at the outer end of the shaft. The standard d^2 is at the end of the top plate of the frame A, the extension of such frame beyond the box B being effected by the side bars A' A^2. The phonogram cylinder F being located between the side bars A' A^2 overhangs the frame, leaving a clear space beneath the cylinder through which the cuttings from the blank drop into the receptacle A^4. The tapering cylinder F is adapted to receive a cylindrical phonogram blank F' having a tapering bore adapted to fit the surface of the cylinder. By swinging the arm D' outwardly, the phonogram blank F' can be removed from the cylinder or placed upon it. To stiffen the side bars A' A^2 of the frame and to prevent a vibrating or tuning fork action, which would injure the record, such side bars are connected by a cross bar A^3 at their outer ends, such cross bar A^3 curving downwardly out of the way so as not to interfere with the manipulations of the blanks.

G is a stationary rod which is mounted in standards on the frame A and its side bar A' in rear of and parallel with the shaft D. Upon the rod G is a sleeve G', which is adapted to slide and turn freely upon such rod, and which is of less length than the rod, so that its longitudinal movement thereon will be equal at least to the length of the phonogram cylinder F. Secured to the outer end of the sleeve G' is the rocking holding arm H which is rigidly fixed to said sleeve and projects upwardly and forward over the top of the phonogram cylinder. On its upper end the rocking holding arm H carries the swinging spectacle frame H' which is mounted to said rock-frame so as to hold the spectacle frame by spring pressure at either limit of its swinging movement. The eyes of the spectacle frame carry the recorder H^1 and the reproducer H^2, which are brought alternately into operative relation with the surface of the phonogram blank by the swinging of the spectacle frame.

The head of the rocking holding arm H is provided with laterally extending arms g^1 g^3 through which pass set screws g^1 g^3. These set screws bear against the spectacle frame when it is swung in one direction or the other, so as to adjust the spectacle frame to bring the recorder or reproducer into the desired relation with the surface of the blank. The screw g^1 effects this adjustment for the reproducer, the result being to adjust the reproducing point laterally across the track of record, so as to bring it into the best relation with the record for reproducing the sounds, which relation can be determined by listening to the instrument. The screw g^3 serves to adjust the relation of the recorder with the surface of the blank. The purpose of this is to enable the production of a double record upon the same blank and in parallel spiral lines.

It is evident that if the recording point be made narrow relative to the feeding movement, the space between the spiral lines of record may be as wide or wider than the track of the record itself. If such is the case the unoccupied space between the lines of record may be utilized for producing a second record. The screw g^2 enables the operator to adjust the recording point so as to track in this space between the lines of the first record, and the screw g^4 enables the operator to adjust the reproducer so that it will track on either record. The eyes of the spectacle frame are provided with fingers *h* through which pass the adjusting screws *h'* which rest upon the guide rest I, which is secured to the side bar A^2 of the frame in front of the phonogram cylinder and parallel with its axis. The bearing of the adjusting screw *h'* upon the straight guide rest I causes the recorder or reproducer to advance in a straight line along the surface of the blank. The ends of the adjusting screws *h'* which bear upon the guide rest I are enlarged so as to overlap said guide rest for a purpose which will be presently explained.

Upon the inner end of the sleeve G' is mounted the traveler arm I', which is adapted to turn freely on the sleeve G'. This traveler arm projects forward over the shaft D between the standard d^2 and the pulley E and has a section of a nut *h'* attached removably to its lower edge and engaging with a fine screw thread h^3, which is cut upon the shaft D between the standard d^2 and the pul-

able so that it can be made of steel and have a finely cut screw surface. The traveler arm itself may be of cast iron. The traveler arm projects over the shaft D and in front of it, and at its forward end is provided with a downwardly projecting finger i having its lower end i' turned upwardly to form a hook, the end of which hook terminates in a knife edge which engages the under side of a screw shaft i^2 mounted in standards on the top plate of the frame A in front of and parallel with the screw cut section of the shaft D. The shaft i^2 is provided with a screw thread i^3 which is coarser than the screw thread h^3. The function of the screw thread i^3 is to move the traveler arm back with a speed which is greater than the forward movement which is given such traveler arm by the screw thread h^3. This screw thread i^3 is a ratchet thread so as to engage effectively with the hook end of the finger i and to move the traveler arm backwardly without causing a friction which would result from a tendency to force the point i' out of the thread were such screw thread beveled equally in opposite directions. The shaft I^2 is driven from the shaft D by means of a belt i^4 which passes over small pulleys on both shafts. A lug j on the sleeve G′ engages with a lug j' on the hub of the traveler arm I′, when the sleeve G′ is turned back to the limit of its turning movement. This limit is determined by a finger j^2 on the rocking holding arm, which strikes the edge of the base A or the side bar A′ when the spectacle frame is thrown backwardly over the center so that it will maintain itself in the elevated position. The lug j does not strike the lug j' until the limit of movement is nearly reached so that the effect will be to just lift the traveler nut h^2 out of engagement with the screw thread h^3 without engaging the point i' of the finger i with the reversing thread i^3. Before this limit of the lifting movement of the spectacle frame is reached such movement does not affect the traveler arm. In front of the guide rest I and the reversing shaft I^2 and extending the entire length of the frame A and the side bar A^2 is a turning guide bar J. This turning guide bar is pivoted in lugs j^2 projecting from the frame, it being held eccentrically by centers j^3 passing through the lugs j^2 and engaging with the outer edge of the bar J at its ends. The inner edge j^4 of the bar J is made as a straight edge, and the enlarged ends of the adjusting screws h' project over this straight edge j^4, and likewise a projection j^5 on the finger i attached to the end of the traveler arm I′ projects over this edge j^4. To one end of the bar J are secured two fingers lift the edge j^4 against the tension of the spring. For this purpose the cam k^2 is provided with two risers k^5, k^6, the rise k^5 being less than the rise k^6. Now by turning the cam k^2 with the fingers the effect will be to turn the bar J and to lift the edge j^4 by two successive movements. The effect of the first movement, that produced by the rise k^5 of the cam, is to lift the spectacle frame so that the recorder or reproducer will be disengaged from the surface of the blank and to lift the traveler nut h^2 out of the feeding screw h^3 so that the further feeding of the spectacle frame will be stopped. The clearance between the edge j^4 and the shoulder j^5 is slightly greater than that between the edge j^4 and the adjusting screw h' so that the recorder or reproducer will be first disengaged from the surface of the blank before the traveler nut is disengaged from its feed screw in order to prevent injury to the blank or the record on it. The effect of the second step of the movement, that produced by the rise k^6 of the cam, is to simultaneously raise the spectacle frame and traveler arm to a farther extent and to throw the point i' of the finger i into engagement with the reversing screw thread i^3. This reverses the movement of the spectacle frame so that in reproducing the matter can be repeated to any extent desired. An arm m may be attached to the turning bar J and be connected by a cord or wire with a treadle J′ so that the movements of the bar J may be produced by the foot of the operator. A scale K is attached to the front of the bar J and pointers m' are secured to the fingers h and project down in front of this scale so that the position of the recorder or the reproducer with relation to the surface of the phonogram blank can be determined. An adjustable knife L is pivoted to the rocking holding arm H for the purpose of turning off the surface of the blank. The swinging arm D′ is provided with a projecting flange m^2 projecting inwardly around the center pin e and entering the end of the phonogram cylinder F, so as to act as a guard to the center pin, preventing the material which is cut from the blank from entering the space around the center and gumming up the bearing. A guard plate m^3 is attached to the side bar A′ in rear of the phonogram cylinder so as to guide the shavings cut from the blank into the receptacle A^3. Such shavings by reason of the movement given them by the turning of the cylinder, tend to pass over the extension A′ of the frame; they are intercepted by the guard plate m^3.

For driving the phonograph I prefer to employ an electric motor. This is inclosed in the box B, the armature M of the motor be-

encircles the shaft D loosely.

The shaft D is prevented from longitudinal displacement by means of the pulley E which is secured to the inner end of the shaft D and extends below the top of the frame A, so that when the arm D' is swung outwardly the pulley E will prevent the inner end of the shaft from disengaging totally from the center d^2 by reason of its impingement against the base A.

The center e is a pin which passes through the arm D' and is made adjustable by means of a screw f which turns into the arm D' and has a flange f' on its head which engages with a slot in the side of the pin e. By turning the screw f it will be seen that the center pin e will be adjusted and this without turning the center pin; the turning of the center pin might be attended with a disturbance of the relative adjustment of the parts.

Upon the shaft D between the standard d^2 and the swinging arm D' is mounted the phonogram cylinder F. This is preferably a cylinder having a slight taper on its external surface, its smaller end being at the outer end of the shaft. The standard d^2 is at the end of the top plate of the frame A, the extension of such frame beyond the box B being effected by the side bars A' A^2. The phonogram cylinder F being located between the side bars A' A^2 overhangs the frame, leaving a clear space beneath the cylinder through which the cuttings from the blank drop into the receptacle A^4. The tapering cylinder F is adapted to receive a cylindrical phonogram blank F' having a tapering bore adapted to fit the surface of the cylinder. By swinging the arm D' outwardly, the phonogram blank F' can be removed from the cylinder or placed upon it. To stiffen the side bars A' A^2 of the frame and to prevent a vibrating or tuning fork action, which would injure the record, such side bars are connected by a cross bar A^1 at their outer ends, such cross bar A^1 curving downwardly out of the way so as not to interfere with the manipulations of the blanks.

G is a stationary rod which is mounted in standards on the frame A and its side bar A' in rear of and parallel with the shaft D. Upon the rod G is a sleeve G', which is adapted to slide and turn freely upon such rod, and which is of less length than the rod, so that its longitudinal movement thereon will be equal at least to the length of the phonogram cylinder F. Secured to the outer end of the sleeve G' is the rocking holding arm H which is rigidly fixed to said sleeve and projects upwardly and forward over the top of the phonogram cylinder. On its upper end the rocking holding arm H carries the swinging spectacle frame H', which is pivoted to said rocking holding arm so as to swing laterally across it. A spring pin g having a beveled end enters bevel slots g' in the hub of the spectacle ing movement. The eyes of the spectacle frame carry the recorder H^3 and the reproducer H^2, which are brought alternately into operative relation with the surface of the phonogram blank by the swinging of the spectacle frame.

The head of the rocking holding arm H is provided with laterally extending arms g^2 g^3 through which pass set screws g^3 g^3. These set screws bear against the spectacle frame when it is swung in one direction or the other, so as to adjust the spectacle frame to bring the recorder or reproducer into the desired relation with the surface of the blank. The screw g^4 effects this adjustment for the reproducer, the result being to adjust the reproducing point laterally across the track of record, so as to bring it into the best relation with the record for reproducing the sounds, which relation can be determined by listening to the instrument. The screw g^5 serves to adjust the relation of the recorder with the surface of the blank. The purpose of this is to enable the production of a double record upon the same blank and in parallel spiral lines.

It is evident that if the recording point be made narrow relative to the feeding movement, the space between the spiral lines of record may be as wide or wider than the track of the record itself. If such is the case the unoccupied space between the lines of record may be utilized for producing a second record. The screw g^5 enables the operator to adjust the recording point so as to track in this space between the lines of the first record, and the screw g^4 enables the operator to adjust the reproducer so that it will track on either record. The eyes of the spectacle frame are provided with fingers h through which pass the adjusting screws h' which rest upon the guide rest I, which is secured to the side bar A^2 of the frame in front of the phonogram cylinder and parallel with its axis. The bearing of the adjusting screw h' upon the straight guide rest I causes the recorder or reproducer to advance in a straight line along the surface of the blank. The ends of the adjusting screws h' which bear upon the guide rest I are enlarged so as to overlap said guide rest for a purpose which will be presently explained.

Upon the inner end of the sleeve G' is mounted the traveler arm I', which is adapted to turn freely on the sleeve G'. This traveler arm projects forward over the shaft D between the standard d^2 and the pulley E and has a section of a nut h^2 attached removably to its lower edge and engaging with a fine screw thread h^3, which is cut upon the shaft D between the standard d^2 and the pulley E. The nut section h^2 is removably secured to the traveler arm I' by means of screws as shown, so that it can be readily replaced when worn out; it is also made remov-

able so that it can be made of steel and have a finely cut screw surface. The traveler arm itself may be of cast iron. The traveler arm projects over the shaft D and in front of it, and at its forward end is provided with a downwardly projecting finger i having its lower end i' turned upwardly to form a hook, the end of which hook terminates in a knife edge which engages the under side of a screw shaft i^2 mounted in standards on the top plate of the frame A in front of and parallel with the screw cut section of the shaft D. The shaft i^2 is provided with a screw thread i^3 which is coarser than the screw thread h^3. The function of the screw thread i^3 is to move the traveler arm back with a speed which is greater than the forward movement which is given such traveler arm by the screw thread h^3. This screw thread i^3 is a ratchet thread so as to engage effectively with the hook end of the finger i and to move the traveler arm backwardly without causing a friction which would result from a tendency to force the point i' out of the thread were such screw thread beveled equally in opposite directions. The shaft I^2 is driven from the shaft D by means of a belt i^4 which passes over small pulleys on both shafts. A lug j on the sleeve G′ engages with a lug j' on the hub of the traveler arm I′, when the sleeve G′ is turned back to the limit of its turning movement. This limit is determined by a finger j^2 on the rocking holding arm, which strikes the edge of the base A or the side bar A′ when the spectacle frame is thrown backwardly over the center so that it will maintain itself in the elevated position. The lug j does not strike the lug j' until the limit of movement is nearly reached so that the effect will be to just lift the traveler nut h^2 out of engagement with the screw thread h^3 without engaging the point i' of the finger i with the reversing thread i^3. Before this limit of the lifting movement of the spectacle frame is reached such movement does not affect the traveler arm. In front of the guide rest I and the reversing shaft I^2 and extending the entire length of the frame A and the side bar A^2 is a turning guide bar J. This turning guide bar is pivoted in lugs j^2 projecting from the frame, it being held eccentrically by centers j^3 passing through the lugs j^2 and engaging with the outer edge of the bar J at its ends. The inner edge j^4 of the bar J is made as a straight edge, and the enlarged ends of the adjusting screws h' project over this straight edge j^4, and likewise a projection j^5 on the finger i attached to the end of the traveler arm I′ projects over this edge j^4. To one end of the bar J are secured two fingers k k' between which plays a cam k^2, secured to the end of a turning stud k^3 having a thumb piece on its end. A spring k^4 throws the finger k down against the cam k^2 throwing the straight edge j^4 downward. The function of the cam k^2 is to turn the bar J against the tension of the spring k^4 and to lift the edge j^4 against the tension of the spring. For this purpose the cam k^2 is provided with two risers k^5, k^6, the rise k^5 being less than the rise k^6. Now by turning the cam k^2 with the fingers the effect will be to turn the bar J and to lift the edge j^4 by two successive movements. The effect of the first movement, that produced by the rise k^5 of the cam, is to lift the spectacle frame so that the recorder or reproducer will be disengaged from the surface of the blank and to lift the traveler nut h^2 out of the feeding screw h^3 so that the further feeding of the spectacle frame will be stopped. The clearance between the edge j^4 and the shoulder j^5 is slightly greater than that between the edge j^4 and the adjusting screw h' so that the recorder or reproducer will be first disengaged from the surface of the blank before the traveler nut is disengaged from its feed screw in order to prevent injury to the blank or the record on it. The effect of the second step of the movement, that produced by the rise k^6 of the cam, is to simultaneously raise the spectacle frame and traveler arm to a farther extent and to throw the point i' of the finger i into engagement with the reversing screw thread i^3. This reverses the movement of the spectacle frame so that in reproducing the matter can be repeated to any extent desired. An arm m may be attached to the turning bar J and be connected by a cord or wire with a treadle J′ so that the movements of the bar J may be produced by the foot of the operator. A scale K is attached to the front of the bar J and pointers m' are secured to the fingers h and project down in front of this scale so that the position of the recorder or the reproducer with relation to the surface of the phonogram blank can be determined. An adjustable knife L is pivoted to the rocking holding arm H for the purpose of turning off the surface of the blank. The swinging arm D′ is provided with a projecting flange m^2 projecting inwardly around the center pin e and entering the end of the phonogram cylinder F, so as to act as a guard to the center pin, preventing the material which is cut from the blank from entering the space around the center and gumming up the bearing. A guard plate m^3 is attached to the side bar A′ in rear of the phonogram cylinder so as to guide the shavings cut from the blank into the receptacle A^3. Such shavings by reason of the movement given them by the turning of the cylinder, tend to pass over the extension A′ of the frame; they are intercepted by the guard plate m^3.

For driving the phonograph I prefer to employ an electric motor. This is inclosed in the box B, the armature M of the motor being mounted on a vertical shaft M′, which passes through the top plate of the box B above which it is provided with a pulley n. An endless belt n' passes around this pulley n and passes under two guide pulleys n^2, n^3, which are held by centers in the frame A near the lower edge of the pulley E. The horizon-

tal shaft D of the phonograph is thus driven from the vertical shaft M' of the motor through an endless belt, whose direction is changed from a horizontal to a vertical plane by means of the guide pulleys n^2, n^3. This belt connection between the motor and phonograph shaft is preferable to gearing since the slight mechanical vibrations of the motor are not transferred thereby to the phonograph. It will be seen that by adjusting the set screw s any tension desired can be given to the belt n'. The form of electric motor employed is a multipolar motor, it having four field magnet poles o o' o^2 o^3. These poles project upwardly from a four armed plate M^2. The armature M revolves above the plate M^2, the arms of the plate M^2 being wound with the field magnet wire. The plate M^2 is supported from the bottom of the box B by suitable legs o^4 and is steadied from the top plate of the box B by studs o^5. The vertical shaft M' of the motor is stepped in the center of the plate M^2. A hole is cut through the center of the plate M^2 and into this hole is introduced from the under side of the plate M^2 a block p of metal carrying in its upper end a flat agate p'. The ping step p is made adjustable by means of a screw p^2 entering the bottom of the plate M^2 and bearing at one side of its head on the plug p, so that by turning this screw the plug p can be adjusted. The lower end of the shaft M' is brought to a rounded point where it rests on the agate p', the shaft above the agate being surrounded by a bushing p^3 of brass or other suitable material; the shaft at its upper end is held by a center pin p^4. The commutator brushes of the motor are shown at N N'. An oil tube N^2 extends from the top plate of the box B down to the step bearing of the motor shaft. The armature of the motor is a Gramme ring which is secured to a hub on the shaft by means of three layers O, O', O^2 of wood, which are placed so that the grain of the middle layer is at right angles to the grain of the two outside layers. The ring armature is of considerable size, so as to act as a fly wheel and so as to have a considerable surface velocity with a relatively low axle speed. The motor employed, being an electro-dynamic motor, has a high degree of efficiency, which efficiency is increased by the fact that it is a multipolar motor, since the magnetism has a shorter distance to travel through the iron of the armature and a more intense field is produced. With the fly wheel form of armature it would not be possible to get an intense a field or one as uniform with a field magnet having but two poles. I have also found that by using a motor with a vertical shaft a great reduction can be made in the power of the driving battery over what would be required by a motor mounted on a horizontal shaft. The motor being nicely bal-

To control the speed of the motor and make it uniform, I provide a governor. This governor has a shaft I' which is driven by an endless belt q from a pulley on the motor shaft. Centrifugal balls I^2 I^3 are secured to springs q' q^2 which are attached at their upper ends to the shaft I' and at their lower ends hold a plate I^4 which surrounds the shaft I' and is raised and lowered by the centrifugal balls I^2 I^3. The shaft I' is a vertical shaft stepped at its lower end on the flat agate q^3 and held at its upper end by a center pin q^4. The movement of the plate I^4 by the governor balls serves to make and break circuit between two springs r r' which are held by a pivoted lever Q which is adjustable by means of a screw Q' passing through a suitable support with which its screw thread engages and also passing through the end of the lever Q below which it is provided with a nut and above which it has a spring r^2 to prevent any lost motion at the connection between the screw Q' and the lever Q. It will be seen that by adjusting the elevation of the lever Q the point at which the plate I^4 will touch both the springs r r' will be varied, and since this point is the point at which the speed of the motor is checked, it will be seen that the motor can be varied in its speed, which it is desirable to do in reproducing the sounds from phonogram blanks, since the speed at which the sound record was made will be indicated upon the blank and the machine can be set for that speed. The head Q^2 of the screw Q' is provided with a suitable index as shown, by means of which and the pointer r^3 the adjustment of the governor can be determined.

R is an electro-magnet whose armature R' breaks circuit at its back point r^4, the armature being retracted by a spring r^5.

The electric connections of the motor and the governor are illustrated in Fig. 12, in which 1, 2, represent the wires from the battery or other source of electrical energy leading to the binding posts 3, 4, which are located upon the box B. From the binding post 4, a wire 5 passes to the field magnet of the motor and from thence to the plate 6 of a plug switch. From the binding post 4 also extends a wire 7 connected to the base of the magnet R and hence to its armature R'. From the insulated back point r^4 of the magnet a wire 8 extends to the armature M of the motor and from thence to the plate 6 of the plug switch; also extending from the binding post 4 is a wire 9 which includes the coils of the magnet R and thence extends to the spring r at which the wire is broken. The wire 9 is continued however from the spring r' to the plate 6 of the plug switch. From the plate 10 of the plug switch a return wire 11 is run back to the binding post 3.

It will be seen that the armature of the motor, its field magnet and the governor magnet R are

opens all of the circuits at once. The circuit of the armature however of the motor is opened whenever the magnet R moves its armature R' off of the back point r^4. The magnet R is wound to a high resistance and is extremely sensitive in its action, so that the instant the circuit to this magnet is closed by the plate I^{13} touching the springs r r', the magnet will act and will open the circuit of the armature. This makes a much more sensitive governing device than if it were attempted to control the circuit of the armature by means of the governor directly. The field magnet circuit of the motor not being opened by the governor the spark which would be caused by the discharge of the field magnets will not be present.

What I claim as my invention is—

1. In a phonograph, the combination with the phonogram cylinder and its carrying shaft, of centers upon which said shaft turns and a swinging arm upon which one of said centers is mounted, substantially as set forth.

2. In a phonograph, the combination with the phonogram cylinder and its carrying shaft, of centers on which the said shaft turns, a swinging arm carrying one of said centers and a standard through which such shaft passes loosely for preventing displacement of the shaft when the center is swung away from its end, substantially as set forth.

3. In a phonograph, the combination with the phonogram cylinder and its carrying shaft, of centers on which said shaft turns, a swinging arm carrying one of said centers and the driving pulley on the shaft extending below the top of the frame so as to lock the shaft against longitudinal displacement, substantially as set forth.

4. In a phonograph, the combination with the cylinder shaft, of the cylinder mounted on one end of said shaft, centers on which the shaft turns and a swinging arm carrying the center at the cylinder end of the shaft whereby the end of the cylinder can be exposed for receiving or removing the phonogram blank, substantially as set forth.

5. In a phonograph, the combination with the supporting frame, of a shaft overhanging the frame, the phonogram cylinder placed on the overhanging portion of the shaft and a removable bearing for this overhanging end of the shaft, substantially as set forth.

6. In a phonograph, the combination with the supporting frame, of the cylinder shaft mounted upon such frame and overhanging the same at one end, the phonogram cylinder mounted on the overhanging end of the shaft, side bars extending from the frame out to the end of the shaft and a movable arm connecting such side bars and carrying the outer bearing of the shaft, substantially as set forth.

7. In a phonograph, the combination with side bars and locked to the other side bar by the swinging bolt e' and nut e^3, substantially as set forth.

8. In a phonograph, the combination with the frame A having side bars A' A^3 and the phonogram cylinder and shaft, of the swinging arm D' carrying the center for the outer end of the shaft and the bar A^4 connecting the side bars of the frame, substantially as set forth.

9. In a phonograph, the combination with the rocking holding arm and the traveler arm, of a movable bar acting upon both of such arms and lifting them together, substantially as set forth.

10. In a phonograph, the combination with the rocking holding arm and the traveler arm, of a bar having a straight edge extending beneath both of such arms and pivoted so as to be capable of a turning movement, whereby it will lift said arms together, substantially as set forth.

11. In a phonograph, the combination with the rocking holding arm and the traveler arm, of the pivoted lifting bar extending under both the rocking holding arm and the traveler arm and a cam for turning said lifting bar, substantially as set forth.

12. In a phonograph, the combination with the rocking holding arm and the traveler arm, of the feeding and reversing screws, the turning lifting bar and the cam having two rises for giving such lifting bar two successive movements, substantially as set forth.

13. In a phonograph, the combination with the rocking holding arm and the traveler arm, of the stud for lifting the traveler arm when the rocking holding arm has reached the limit of its lifting movement, substantially as set forth.

14. In a phonograph, the combination with the supporting rod and the sleeve sliding and turning thereon, of the rocking holding arm secured to said sleeve, the traveler arm turning upon such sleeve, a stop for determining the limit of the lifting movement of the rocking holding arm and studs for lifting the traveler arm when the rocking holding arm has reached the limit of its lifting movement, substantially as set forth.

15. In a phonograph, the combination with the rocking holding arm and the traveler arm, of the turning lifting bar acting upon both of said arms and the foot treadle connected with said turning lifting bar for operating it, substantially as set forth.

16. The method of producing more than one record on the same phonogram blank consisting of first making one record thereon and then adjusting the recording point to an intermediate position between the adjacent spiral lines of the preceding record and making

from the vertical shaft of the motor through an endless belt, whose direction is changed from a horizontal to a vertical plane by means of the guide pulleys n^2, n^3. This belt connection between the motor and phonograph shaft is preferable to gearing since the slight mechanical vibrations of the motor are not transferred thereby to the phonograph. It will be seen that by adjusting the set screw n any tension desired can be given to the belt n'. The form of electric motor employed is a multipolar motor, it having four field magnet poles n n' n^2 n^3. These poles project upwardly from a four armed plate M^2. The armature M revolves above the plate M^2, the arms of the plate M^2 being wound with the field magnet wire. The plate M^2 is supported from the bottom of the box B by suitable legs n^4 and is steadied from the top plate of the box B by studs n^5. The vertical shaft M' of the motor is stepped in the center of the plate M^2. A hole is cut through the center of the plate M^2 and into this hole is introduced from the under side of the plate M^2 a block p of metal carrying in its upper end a flat agate p'. The plug step p is made adjustable by means of a screw p^2 entering the bottom of the plate M^2 and bearing at one side of its head on the plug p, so that by turning this screw the plug p can be adjusted. The lower end of the shaft M' is brought to a rounded point where it rests on the agate p', the shaft above the agate being surrounded by a bushing p^3 of brass or other suitable material; the shaft at its upper end is held by a center pin p^4. The commutator brushes of the motor are shown at N N'. An oil tube N^2 extends from the top plate of the box B down to the step bearing of the motor shaft. The armature of the motor is a Gramme ring which is secured to a hub on the shaft by means of three layers O, O', O^2 of wood, which are placed so that the grain of the middle layer is at right angles to the grain of the two outside layers. The ring armature is of considerable size, so as to act as a fly wheel and so as to have a considerable surface velocity with a relatively low axle speed. The motor employed, being an electro-dynamic motor, has a high degree of efficiency, which efficiency is increased by the fact that it is a multipolar motor, since the magnetism has a shorter distance to travel through the iron of the armature and a more intense field is produced. With the fly wheel form of armature it would not be possible to get an intense a field or one as uniform with a field magnet having but two poles. I have also found that by using a motor with a vertical shaft a great reduction can be made in the power of the driving battery over what would be required by a motor mounted on a horizontal shaft. The motor being nicely balanced on its jewel step seems to require very little power to drive it and does not produce troublesome vibration in the phonograph.

It uniform, I provide a governor. This governor has a shaft I' which is driven by an endless belt n from a pulley on the motor shaft. Centrifugal balls I^2 I^2 are secured to springs q' q' which are attached at their upper ends to the shaft I' and at their lower ends hold a plate I^3 which surrounds the shaft I' and is raised and lowered by the centrifugal balls I^2 I^2. The shaft I' is a vertical shaft stepped at its lower end on the flat agate q^2 and held at its upper end by a center pin q^3. The movement of the plate I^3 by the governor balls serves to make and break circuit between two springs r r' which are held by a pivoted lever Q which is adjustable by means of a screw Q' passing through a suitable support with which its screw thread engages and also passing through the end of the lever Q below which it is provided with a nut and above which it has a spring r^2 to prevent any lost motion at the connection between the screw Q' and the lever Q. It will be seen that by adjusting the elevation of the lever Q the point at which the plate I^3 will touch both the springs r r' will be varied, and since this point is the point at which the speed of the motor is checked, it will be seen that the motor can be varied in its speed, which it is desirable to do in reproducing the sounds from phonogram blanks, since the speed at which the sound record was made will be indicated upon the blank and the machine can be set for that speed. The head Q^2 of the screw Q' is provided with a suitable index as shown, by means of which and the pointer r^3 the adjustment of the governor can be determined.

It is an electro-magnet whose armature R' breaks circuit at its back point r^4, the armature being retracted by a spring r^5.

The electric connections of the motor and the governor are illustrated in Fig. 13, in which 1, 2, represent the wires from the battery or other source of electrical energy leading to the binding posts 3, 4, which are located upon the box B. From the binding post 4, a wire 5 passes to the field magnet of the motor and from thence to the plate 6 of a plug switch. From the binding post 4 also extends a wire 7 connected to the base of the magnet R and hence to its armature R'. From the insulated back point r^4 of the magnet a wire 8 extends to the armature M of the motor and from thence to the plate 6 of the plug switch; also extending from the binding post 4 is a wire 9 which includes the coils of the magnet R and thence extends to the spring r at which the wire is broken. The wire 9 is continued however from the spring r' to the plate 6 of the plug switch. From the plate 10 of the plug switch a return wire 11 is run back to the binding post 2.

It will be seen that the armature of the motor, its field magnet and the governor magnet are in three separate multiples are circuits from the battery. The circuit of the field magnet is never opened except at the plug switch, which

opens all of the circuits at once. The circuit of the armature however of the motor is opened whenever the magnet R moves its armature R' off of the back point r^4. The magnet R is wound to a high resistance and is extremely sensitive in its action, so that the instant the circuit to this magnet is closed by the plate P^3 touching the springs r r', the magnet will act and will open the circuit of the armature. This makes a much more sensitive governing device than if it were attempted to control the circuit of the armature by means of the governor directly. The field magnet circuit of the motor not being opened by the governor the spark which would be caused by the discharge of the field magnets will not be present.

What I claim as my invention is—

1. In a phonograph, the combination with the phonogram cylinder and its carrying shaft, of centers upon which said shaft turns and a swinging arm upon which one of said centers is mounted, substantially as set forth.

2. In a phonograph, the combination with the phonogram cylinder and its carrying shaft, of centers on which the said shaft turns, a swinging arm carrying one of said centers and a standard through which such shaft passes loosely for preventing displacement of the shaft when the center is swung away from its end, substantially as set forth.

3. In a phonograph, the combination with the phonogram cylinder and its carrying shaft, of centers on which said shaft turns, a swinging arm carrying one of said centers and the driving pulley on the shaft extending below the top of the frame so as to lock the shaft against longitudinal displacement, substantially as set forth.

4. In a phonograph, the combination with the cylinder shaft, of the cylinder mounted on one end of said shaft, centers on which the shaft turns and a swinging arm carrying the center at the cylinder end of the shaft whereby the end of the cylinder can be exposed for receiving or removing the phonogram blank, substantially as set forth.

5. In a phonograph, the combination with the supporting frame, of a shaft overhanging the frame, the phonogram cylinder placed on the overhanging portion of the shaft and a removable bearing for this overhanging end of the shaft, substantially as set forth.

6. In a phonograph, the combination with the supporting frame, of the cylinder shaft mounted upon such frame and overhanging the same at one end, the phonogram cylinder mounted on the overhanging end of the shaft, side bars extending from the frame out to the end of the shaft and a movable arm connecting such side bars and carrying the outer bearing of the shaft, substantially as set forth.

7. In a phonograph, the combination with the frame A, having side bars A' A^2 and the phonogram cylinder and shaft, of the swinging arm D' carrying the center for the outer end of the shaft and pivoted upon one of said side bars and locked to the other side bar by the swinging bolt e' and nut e^4, substantially as set forth.

8. In a phonograph, the combination with the frame A having side bars A' A^2 and the phonogram cylinder and shaft, of the swinging arm D' carrying the center for the outer end of the shaft and the bar A^4 connecting the side bars of the frame, substantially as set forth.

9. In a phonograph, the combination with the rocking holding arm and the traveler arm, of a movable bar acting upon both of such arms and lifting them together, substantially as set forth.

10. In a phonograph, the combination with the rocking holding arm and the traveler arm, of a bar having a straight edge extending beneath both of such arms and pivoted so as to be capable of a turning movement, whereby it will lift said arms together, substantially as set forth.

11. In a phonograph, the combination with the rocking holding arm and the traveler arm, of the pivoted lifting bar extending under both the rocking holding arm and the traveler arm and a cam for turning said lifting bar, substantially as set forth.

12. In a phonograph, the combination with the rocking holding arm and the traveler arm, of the feeding and reversing screws, the turning lifting bar and the cam having two rises for giving such lifting bar two successive movements, substantially as set forth.

13. In a phonograph, the combination with the rocking holding arm and the traveler arm, of the stud for lifting the traveler arm when the rocking holding arm has reached the limit of its lifting movement, substantially as set forth.

14. In a phonograph, the combination with the supporting rod and the sleeve sliding and turning thereon, of the rocking holding arm secured to said sleeve, the traveler arm turning upon such sleeve, a stop for determining the limit of the lifting movement of the rocking holding arm and studs for lifting the traveler arm when the rocking holding arm has reached the limit of its lifting movement, substantially as set forth.

15. In a phonograph, the combination with the rocking holding arm and the traveler arm, of the turning lifting bar acting upon both of said arms and the foot treadle connected with said turning lifting bar for operating it, substantially as set forth.

16. The method of producing more than one record on the same phonogram blank consisting of first making one record thereon and then adjusting the recording point to an intermediate position between the adjacent spiral lines of the preceding record and making an additional record, whereby without increasing the fineness of the feeding screw more matter can be recorded upon a phonogram blank of given length, substantially as set forth.

17. In a phonograph, the combination with the rocking holding arm, of the guide rest and the adjustment upon such guide rest having a bearing overlapping the guide rest and a turning lifting bar beneath the overlapping bearing, substantially as set forth.

18. In a phonograph, the combination with the phonogram cylinder and shaft, of the swinging arm carrying the center for the cylinder end of the shaft and the wax guard surrounding such center and entering the end of the cylinder, substantially as set forth.

19. In a phonograph, the combination with the phonogram cylinder and the turning off knife or tool, of the wax guard in rear of such cylinder for directing the shavings into a receptacle beneath the cylinder, substantially as set forth.

20. In a phonograph, the combination with the horizontal main shaft, the phonogram blank carrier revolved thereby, and the recording and reproducing devices, of an electric motor mounted upon a vertical shaft, and a belt connection between the motor shaft and the phonograph shaft, substantially as set forth.

21. In a phonograph, the combination with the phonograph shaft, the phonogram blank carrier revolved thereby, and the recording and reproducing devices, of an electric motor connected with said shaft for driving the same, the armature and the field magnet of said motor being connected in multiple arc, and a speed governor controlling the armature circuit, substantially as set forth.

22. In a phonograph, the combination with the phonograph shaft, the phonogram blank carrier revolved thereby, and the recording and reproducing devices, of an electric motor connected with said shaft for driving the same, and having its armature and its field magnet in separate multiple arc circuits, a magnet controlling the armature circuit, and a centrifugal governor controlling the said magnet, substantially as set forth.

23. In a phonograph, the combination with the phonograph shaft, the phonogram blank carrier revolved thereby, and the recording and reproducing devices, of an electric motor connected with said shaft for driving the same, a speed governor controlling the speed of said motor by opening the circuit thereof when a predetermined speed has been obtained, and an adjusting screw for varying the point at which the governor will affect the circuit, substantially as set forth.

24. In a phonograph, the combination with the phonograph shaft, the phonogram blank carrier revolved thereby, and the recording and reproducing devices, of an electric motor connected with said shaft for driving the same, a centrifugal governor controlling such motor by closing circuit at contacts and an adjustment for varying the position of such contacts whereby the speed of the motor can be varied, substantially as set forth.

25. In a phonograph, the combination with the phonograph shaft, the phonogram blank carrier revolved thereby, and the recording and reproducing devices, of an electric motor connected with said shaft for driving the same, a magnet controlling said motor, contacts mounted upon an adjustably pivoted lever at which the magnet circuit is broken and a centrifugal governor moving a disk which closes the magnet circuit at such contacts, substantially as set forth.

26. In a phonograph, the combination with the frame supporting the phonograph shaft, the phonogram blank carrier, and the recording and reproducing devices, of an electric motor mounted upon a base and connected by a belt with the phonograph shaft, and means for adjusting the phonograph frame to tighten said belt, substantially as set forth.

27. In a phonograph, the combination with the phonograph proper in which are combined a phonograph shaft, a phonogram blank carrier revolved thereby, and recording and reproducing devices, the same being mounted upon a separate frame, of a base carrying a motor connected with the said shaft for driving the same, and cushions of elastic material between said base and the phonograph frame, substantially as set forth.

28. In a phonograph, the combination with the frame of the phonograph proper, of the base carrying a motor connected by a belt with the phonograph shaft, guiding lugs upon the base, slotted lugs and screws for securing the phonograph frame to the base and an adjusting screw for adjusting the phonograph frame upon the base for the purpose of tightening the belt, substantially as set forth.

29. In a phonograph, the combination with the feed screw and the traveler arm, of the nut section secured rigidly but removably to said traveler arm and engaging with said feed screw, substantially as set forth.

This specification signed and witnessed this 27th day of July, 1888.

THOS. A. EDISON.

Witnesses:
RICHD. N. DYER,
WILLIAM PELZER.

846 (No Model.) 4 Sheets—Sheet 1.

C. A. RANDALL.

APPARATUS FOR RECORDING AND REPRODUCING SPEECH, &c.

No. 502,382. Patented Aug. 1, 1893.

Fig. 1.

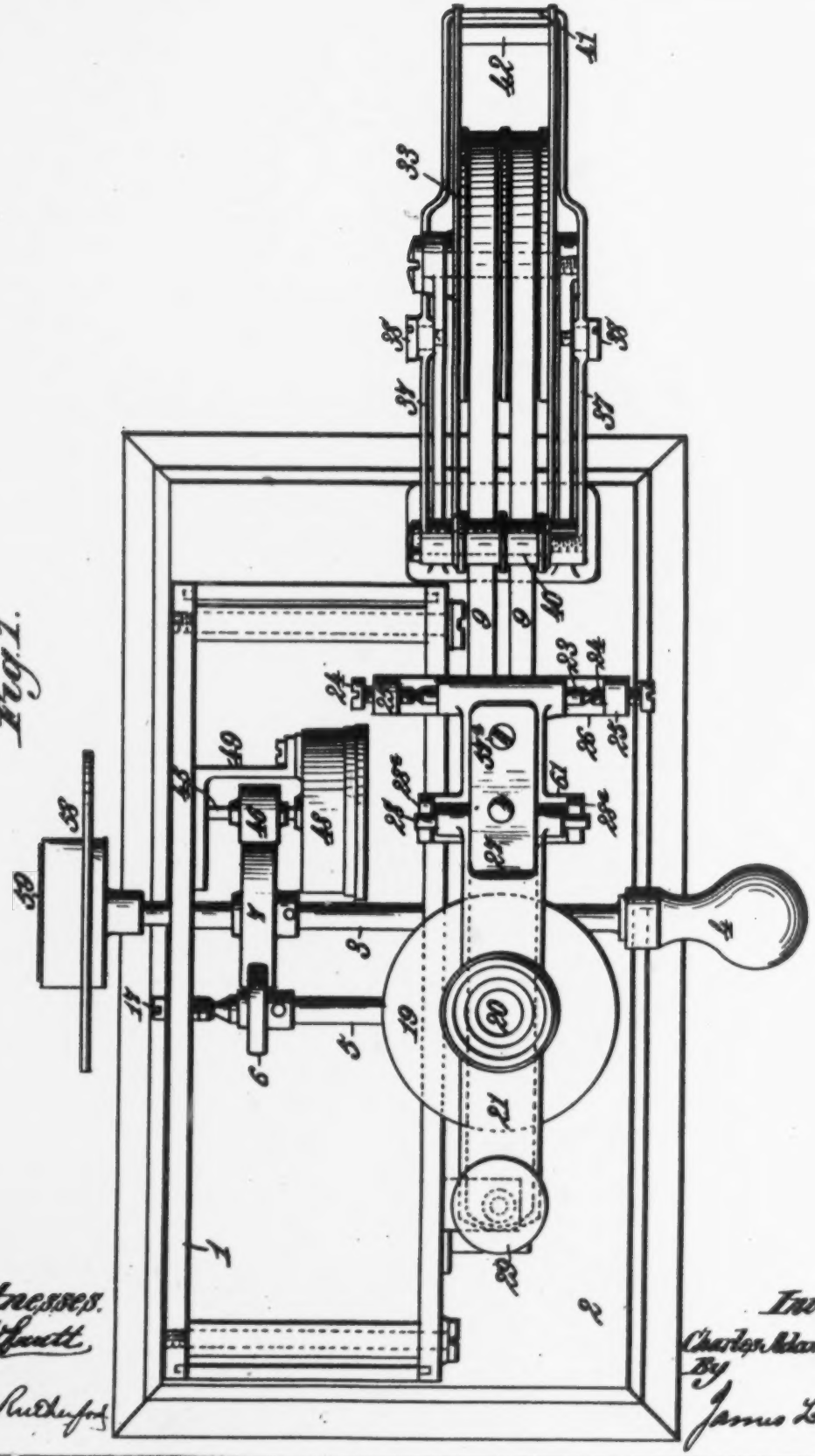

Witnesses.
Robt. Sewell
J. A. Ruthenford

Inventor:
Charles Adams Randall.
By
James L. Norris.
Atty.

848 (No Model.) 4 Sheets—Sheet 2.

C. A. RANDALL.

APPARATUS FOR RECORDING AND REPRODUCING SPEECH, &c.

No. 502,382. Patented Aug. 1, 1893.

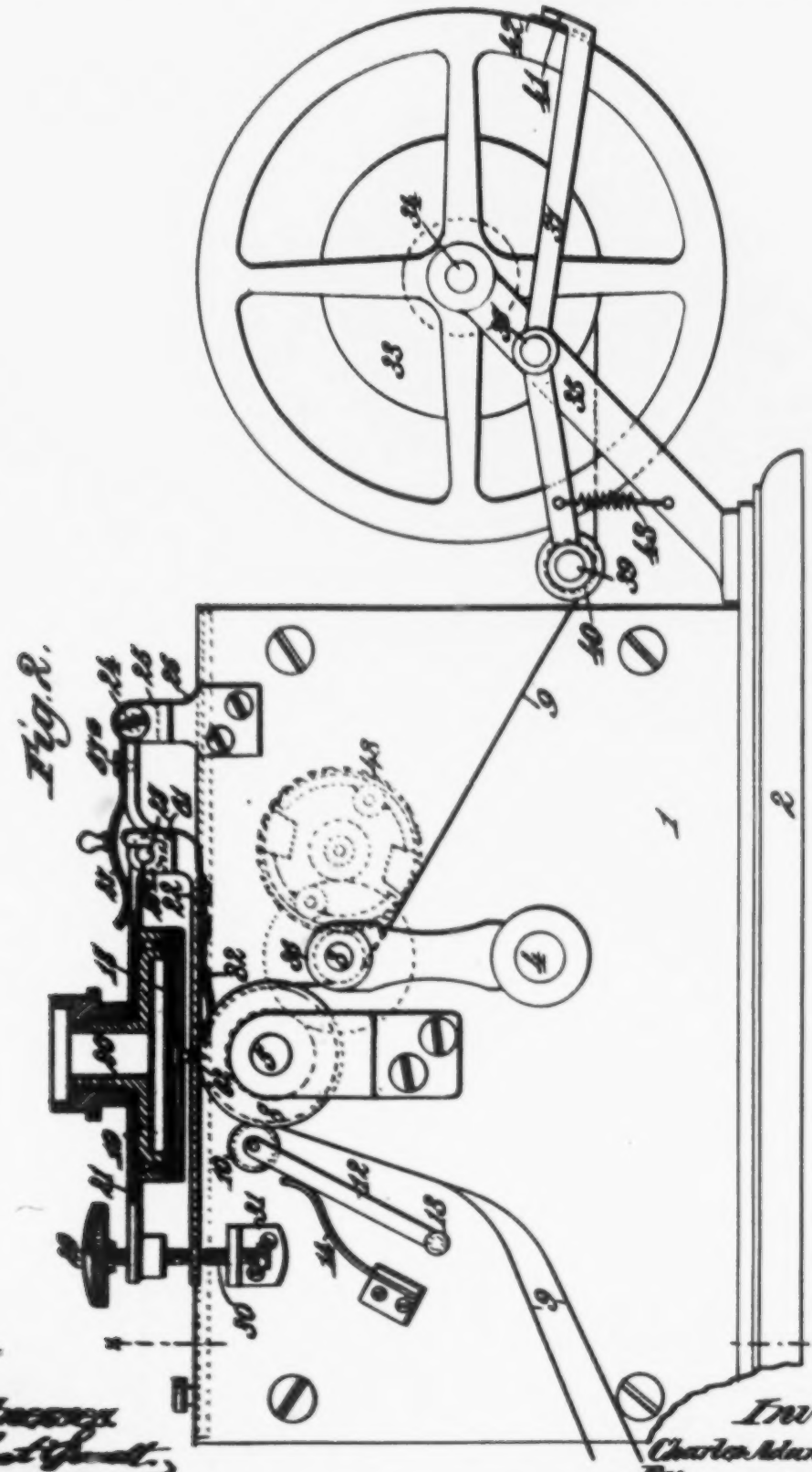

Witnesses:
Robert Sweet.
J. A. Rutherford.

Inventor:
Charles Adams Randall.
By
James L. Norris.
Atty.

(No Model.) 4 Sheets—Sheet 3.

C. A. RANDALL.

APPARATUS FOR RECORDING AND REPRODUCING SPEECH, &c.

No. 502,382. Patented Aug. 1, 1893.

Fig. 1.

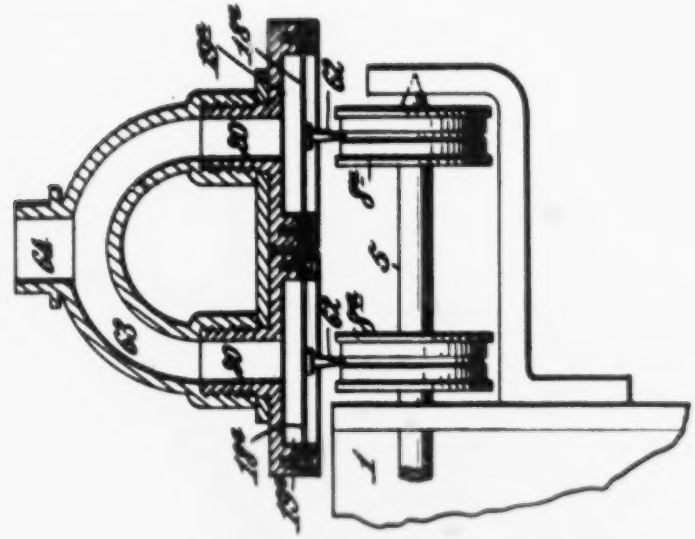

Fig. 3.

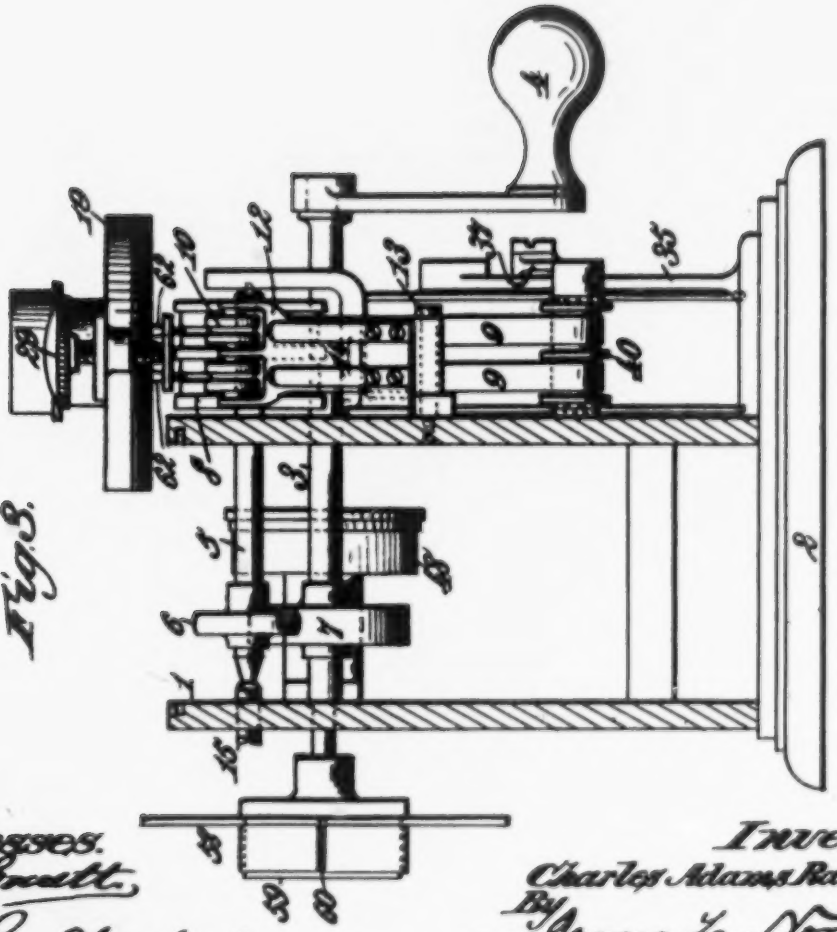

Witnesses.
Robt. Swatt.
J. A. Rutherford.

Inventor.
Charles Adams Randall.
By James L. Norris.
Atty.

852 (No Model.) 4 Sheets—Sheet 4.

C. A. RANDALL.

APPARATUS FOR RECORDING AND REPRODUCING SPEECH, &c.

No. 502,382. Patented Aug. 1, 1893.

Fig. 5.

Fig. 6.

Fig. 4.

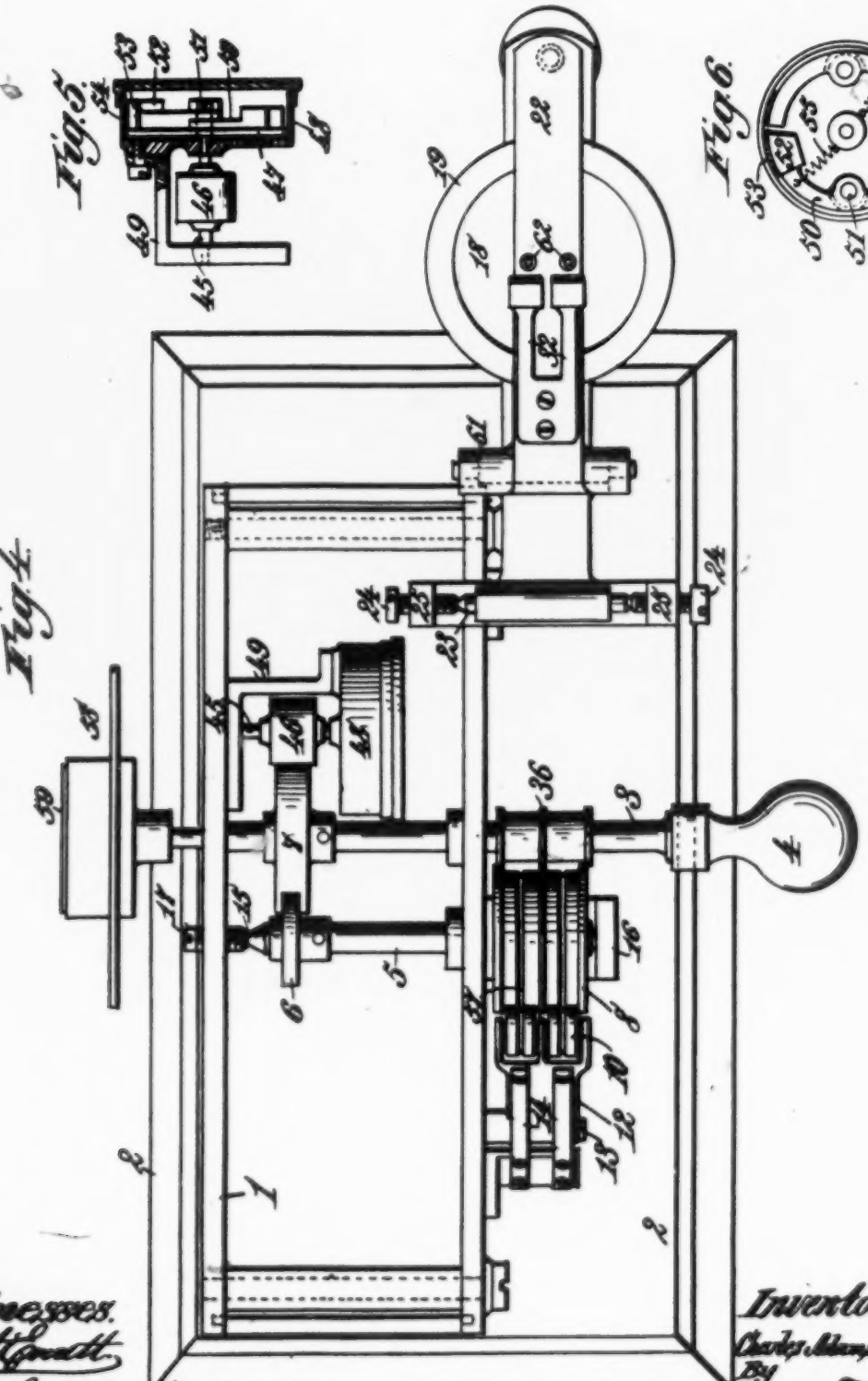

Witnesses.
Robt. Gratt
J. A. Rutherford.

Inventor:
Charles Adams Randall.
By
James L. Norris.
Atty.

UNITED STATES PATENT OFFICE.

CHARLES ADAMS RANDALL, OF LONDON, ENGLAND.

APPARATUS FOR RECORDING AND REPRODUCING SPEECH, &c.

SPECIFICATION forming part of Letters Patent No. 502,382, dated August 1, 1893.

Application filed June 11, 1892. Serial No. 436,369. (No model.) Patented in England June 18, 1891, No. 10,357.

To all whom it may concern:

Be it known that I, CHARLES ADAMS RANDALL, a citizen of the United States, residing at London, England, have invented new and useful Improvements in Apparatus for Recording and Reproducing Articulate Speech and other Sounds, (for which I have obtained a patent in Great Britain, No. 10,357, dated June 18, 1891,) of which the following is a specification.

My invention relates to apparatus for recording and reproducing articulate speech, said apparatus being known, broadly, as the phonograph, graphophone, &c.

It is the purpose of my said invention to provide an apparatus of this character which shall be convenient, efficient, and simple, in the construction and operation and by which a plurality of records may be obtained simultaneously, and certainly.

It is an especial object of my said invention to provide for the easy, simple, and economical production of a plurality of records from the same series of phonetic vibrations, one or more of said records being preserved, or retained, while the other passes into the hands of third persons, as is customary, in the methods heretofore in use, in the preparation of business letters and papers, of which press, or carbon copies are formed for retention.

My invention also contemplates and includes the provision of automatic brake-mechanism acting upon the devices by which the record-receiving material is held, in order to prevent it from being paid off too rapidly, and to maintain a practically uniform tension.

It is my purpose, also, to simplify and improve the construction of parts, the organization thereof and the operation of the completed mechanism, and the said invention consists, to these ends, in the novel features of construction and in the new combinations of parts hereinafter fully set forth and then more particularly pointed out and defined in the claims appended to this specification.

To enable others skilled in the art to which my invention pertains to understand and to make, construct, and use the same, I will now proceed to describe said invention in detail, reference being had to the accompanying drawings, in which—

Figure 1 is a plan view of a mechanism embodying my invention. Fig. 2 is a side elevation, partly in vertical section, the section plane being in the line x—x, in Fig. 1. Fig. 3 is a transverse vertical section upon the line y—y, Fig. 2. Fig. 4 is a plan view of that portion of the mechanism exposed to view by removing the top, or cover, of the housing, or casing, and turning back the diaphragm and its supporting-arm. Fig. 5 is a detail section of the speed-governor. Fig. 6 is a front elevation of the parts shown in Fig. 5, the face plate, or front of the casing, or housing, being removed. Fig. 7 is a sectional elevation showing a modified construction.

In the said drawings, the reference numeral 1 indicates the box, casing, or housing, inclosing the greater part of the operative elements of the mechanism, the housing being arranged upon any suitable base 2.

The reference numeral 3 indicates the driving-shaft of the apparatus, which is placed in suitable bearings and crosses the housing transversely to the length of the latter. In the present instance, the shaft is provided with a crank-handle 4, for manual rotation, but I do not confine myself to the use of any specific means for driving the same, as I may employ any mechanical or electrical mechanism suitable for the purpose. In bearings in said housing, near the driving-shaft 3, is a second shaft 5, parallel with the shaft 3, and having mounted thereon a feed-drum 6. Upon the driving-shaft 3, is fixed a friction-wheel, or pulley, 7, which has frictional engagement with the feed-drum 6. The frictionally engaged peripheries of the two parts last named may be, and preferably are, provided with a surfacing of india-rubber, leather, or other suitable material. Upon said shaft 5 is also rigidly mounted a drum, or roll 8, serving as a support for the strips, ribbons, or bands, 9, upon which the phonetic record is made, these strips being held between the drum 8 and independent rolls 10, which are journaled in the forked extremity of an arm 12, pivoted upon a stud 13, and held against the face of the drum by means of springs 14

No. 502,382. Patented Aug. 1, 1893.

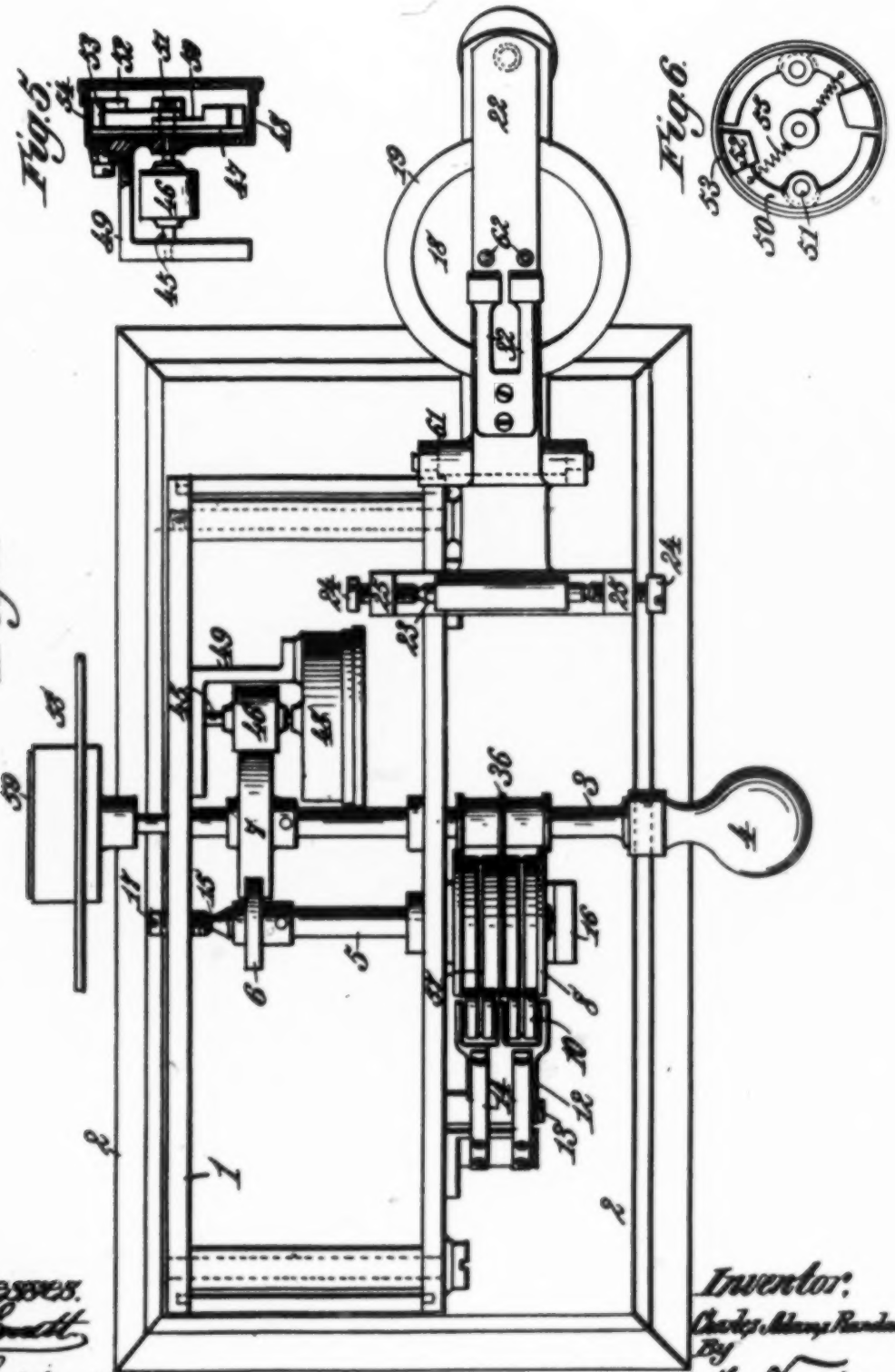

Witnesses.
Robt. Gandt
J. A. Rutherford.

Inventor:
Charles Albert Randall.
By
James L. Norris.
Atty.

UNITED STATES PATENT OFFICE.

CHARLES ADAMS RANDALL, OF LONDON, ENGLAND.

APPARATUS FOR RECORDING AND REPRODUCING SPEECH, &c.

SPECIFICATION forming part of Letters Patent No. 502,382, dated August 1, 1893.

Application filed June 11, 1892. Serial No. 436,369. (No model.) Patented in England June 18, 1891, No. 10,357.

To all whom it may concern:

Be it known that I, CHARLES ADAMS RANDALL, a citizen of the United States, residing at London, England, have invented new and useful Improvements in Apparatus for Recording and Reproducing Articulate Speech and other Sounds, (for which I have obtained a patent in Great Britain, No. 10,357, dated June 18, 1891,) of which the following is a specification.

My invention relates to apparatus for recording and reproducing articulate speech, said apparatus being known, broadly, as the phonograph, graphophone, &c.

It is the purpose of my said invention to provide an apparatus of this character which shall be convenient, efficient, and simple, in the construction and operation and by which a plurality of records may be obtained simultaneously, and certainly.

It is an especial object of my said invention to provide for the easy, simple, and economical production of a plurality of records from the same series of phonetic vibrations, one or more of said records being preserved, or retained, while the other passes into the hands of third persons, as is customary, in the methods heretofore in use, in the preparation of business letters and papers, of which press, or carbon copies are formed for retention.

My invention also contemplates and includes the provision of automatic brake-mechanism acting upon the devices by which the record-receiving material is held, in order to prevent it from being paid off too rapidly, and to maintain a practically uniform tension.

It is my purpose, also, to simplify and improve the construction of parts, the organization thereof and the operation of the completed mechanism, and the said invention consists, to these ends, in the novel features of construction and in the new combinations of parts hereinafter fully set forth and then more particularly pointed out and defined in the claims appended to this specification.

To enable others skilled in the art to which my invention pertains to understand and to make, construct, and use the same, I will now proceed to describe said invention fully and in detail, reference being had to the accompanying drawings, in which—

Figure 1 is a plan view of a mechanism embodying my invention. Fig. 2 is a side elevation, partly in vertical section, the section plane being in the line x—x, in Fig. 1. Fig. 3 is a transverse vertical section upon the line y—y, Fig. 2. Fig. 4 is a plan view of that portion of the mechanism exposed to view by removing the top, or cover, of the housing, or casing, and turning back the diaphragm and its supporting-arm. Fig. 5 is a detail section of the speed-governor. Fig. 6 is a front elevation of the parts shown in Fig. 5, the face plate, or front of the casing, or housing, being removed. Fig. 7 is a sectional elevation showing a modified construction.

In the said drawings, the reference numeral 1 indicates the box, casing, or housing, inclosing the greater part of the operative elements of the mechanism, the housing being arranged upon any suitable base 2.

The reference numeral 3 indicates the driving-shaft of the apparatus, which is placed in suitable bearings and crosses the housing transversely to the length of the latter. In the present instance, the shaft is provided with a crank-handle 4, for manual rotation, but I do not confine myself to the use of any specific means for driving the same, as I may employ any mechanical or electrical mechanism suitable for the purpose. In bearings in said housing, near the driving-shaft 3, is a second shaft 5, parallel with the shaft 3, and having mounted thereon a feed-drum 6. Upon the driving-shaft 3, is fixed a friction-wheel, or pulley, 7, which has frictional engagement with the feed-drum 6. The frictionally engaged peripheries of the two parts last named may be, and preferably are, provided with a surfacing of india-rubber, leather, or other suitable material. Upon said shaft 5 is also rigidly mounted a drum, or roll 8, serving as a support for the strips, ribbons, or bands, 9, upon which the phonetic record is made, these strips being held between the drum 8 and independent rolls 10, which are journaled in the forked extremity of an arm 12, pivoted upon a stud 13, and held against the face of the drum by means of springs 14. The drum, or roll 8, has its shaft 5 supported

in suitable bearings, preferably of the type known as cone-bearings 15 one of which rests in a seat in a fixed bracket 16, the other extremity of said shaft being held by a set-screw 17, tapped through one wall of the casing, or housing 1. Over this drum, thus supported, is arranged the diaphragm 18, supported in any preferred and familiar manner in a diaphragm-housing, or chamber, 19, which is provided with a central tube 20, opening into said chamber just behind, or above, the central portion of the diaphragm. This tube passes through an opening in an arm, or bar, by which the diaphragm and its chamber are supported. This supporting arm or bar 21 is pivotally connected at one end to a separate arm 22, which is itself, pivotally mounted upon a shaft 23, having cone-shaped extremities which lie in seats formed in the ends of set-screws 24, tapped through lugs 25 which rise from the ends of a bracket-support 26, screwed to the housing. Upon the second arm 22, is mounted a spring 27, which extends beyond the point of pivotal connection 28, between the two arms, the free end of said spring resting upon the arm 21 and pressing the same downward, the free end of said arm, or bar, being supplied with an adjusting and sustaining set-screw 29, which is tapped through a boss on the arm. The point of this screw rests upon the arm 22, which, after dropping somewhat below the point of pivotal connection 28, is extended beneath, and in substantial parallelism with the diaphragm, to a point on the other side thereof, where its end lies beneath the point of the screw 29, (Fig. 2.)

Below the end of the bar 22, and substantially in line with the set-screw 29, is a second set-screw 30, tapped through a bracket 31 and presenting an upwardly turned, conical point, which engages the lower surface of the arm 22. These two set-screws act in unison in the support given to the arms, or bars 21 and 22, and by their reciprocal adjustment the diaphragm may be placed in any required relation to the surface of the drum 8. The bar 22 passes between the latter and the diaphragm, and out of contact with either. One function of said bar is to sustain leaf-springs 32, fastened by one end to the lower surface of the bar, and having their free ends resting upon the record-receiving material as the latter is fed by the drum. These spring-pads have comparatively light tension and by their action give stability and steadiness to the material they act upon.

The record-receiving material is formed, preferably, in the form of tapes, ribbons, or strips, and is wound upon reels, or spools 33, which are mounted upon a shaft 34, the journals of which lie in bearings in inclined brackets 35, mounted upon the base-piece 2. The tapes, strips, or ribbons are taken from said the latter and between its face and the two frictional feed-rolls 10.

To avoid too rapid pay-off, or unwinding, from the spools, or reels, 33, I provide a brake-lever 37, which is mounted upon a pivot 38 on the brackets, or arms, 35. The lever 37 consists, essentially, of a frame, the parallel arms of which lie close to the outer faces of the brackets 35, the ends which lie next the base-piece 2, being connected by a spindle, or shaft, 39, upon which is mounted a guide-roll 40, beneath which the record-receiving tapes, ribbons, or strips, are conducted in passing to the guide-roll 36. At their opposite ends, the lever-arms 37 are connected by a friction-plate 41, which lies close to, and in comparatively light frictional contact with, the periphery of the spool which carries and pays off the record-receiving material. The friction-surface of the plate 41 is preferably composed of a material 42, of any suitable kind, its choice being controlled, in a measure, by the particular effect desired; such, for example, as the production of a maximum resistance with the minimum of power expended on the lever, &c., the selection of such material being a matter which can be left to the judgment of those skilled in the art.

The brake-lever is actuated by a spring, or springs, 43, connected thereto and to the shaft-supporting brackets 35. The stress, or tension of this spring is quite light and it acts on the lever with a downward pull, or draft, thereby having a tendency to carry the guide-roll 40 downward. When the tension of the record-receiving strips, bands, or ribbons 9 is normal, which will be the case so long as the speed of revolution of the spools 33 is not excessive, the slight pull, or tension, under which the said strips are maintained, will have sufficient action upon the guide-roll 40 to overcome the stress of the spring 43, and the friction-plate 41 will, by the slight turn thus given to the lever, be drawn away from the periphery of the spool. Should the tension, or draft, exerted upon the ribbons, or strips 9, be relaxed, however, by the too rapid pay-off of the spools, the spring 43 will act and the lever 37 will be slightly turned upon its fulcrum, bringing the friction-plate down on the spool and checking, or retarding its movement, until the proper equilibrium is restored.

Upon a shaft 45, mounted in suitable bearings in the casing, or housing, 1, is fixed a pulley 46 to revolve the shaft and operate a speed-governor. The latter consists of a disk 47, revolving in a cylindrical shell, or housing 48, which is rigid upon a supporting bracket 49, and forms a support for one end of the shaft 45. Upon the flat face of the disk 47 are pivotally mounted curved lever-arms 50, extending upon opposite sides of their pivotal attachments 51, and provided with weights 52,

be thrown outward by centrifugal force, and as they are provided upon their faces with pads 53, of leather, or other suitable material, these will be pressed against the flanges 54 of the casing with a frictional contact proportioned to the centrifugal force exerted. The weights 52 simply increase the effects produced, and may, or may not be used.

In some instances it may be desirable to exert some force upon the frictional pads 53, or on the arms carrying them, to draw said pads away from the flange 54. This may be accomplished in different ways, but one simple method is to connect the ends of the curved arms 50 by means of light springs 55, which may be made adjustable to vary the force exerted. I have indicated this elastic connection, in Fig. 6, by means of dotted lines, but I do not, in any particular, restrict my invention to the use thereof, or to any specific feature of the same.

The automatic speed governor is operated by the frictional engagement of the pulley 46 with a larger friction-gear 7 upon the driving-shaft. As this speed-governor is a separate invention, relatively to the subject-matter of this application, I make no claim thereto, herein, my rights, in this respect, being relegated to a future and separate application for Letters-Patent.

I find it, in practice, advantageous to form circumferential channels 57 in the drum 8, one of said channels being provided for each strip of record-receiving material. Channels or grooves of the same kind are also formed in the spring-pressed rolls 10, as shown in Figs. 2, 3 and 4, said channels, as well as those in the drum 8, being in the vertical plane of the recording-styles, whereby the lines of record are not subjected to surface-contact, or pressure. In the absence of such channels, I preferably cover the drum with a composition of soft rubber and other suitable materials, so that the strip will be supported during the process of recording. Many compounds and some materials are well known to those skilled in the art, which will answer the purpose proposed, without offering any material resistance to the action of the recording stylus. The strips, or ribbons 9, after receiving the record, may be wound spirally, either for transmission by mail, or otherwise, or for filing as retained copies. To facilitate this winding, I provide a flanged reel 58, which may be mounted upon a reel-holder 59, mounted on the prolonged extremity of the driving-shaft, outside the housing 1. This reel-holder consists of a simple cylindrical body, upon which the reel 58 is slipped, a dividing cut 60 being formed therein, to enable it to expand somewhat and grasp the reel-holder, as seen in Fig. 3.

As it may, in some cases, be desirable to provide interchangeable diaphragms I mount seats are formed in upwardly turned lugs 61, upon the end of the supporting arm 22, and the pivotal bearing is held in said seats by the leaf-spring 27. The arm 21, together with the diaphragm, its housing, or chamber, and the other adjuncts of said arm, may be readily and instantaneously detached by simply turning the spring 27 upon its pivotal attachment 57^a. This will enable the operator to substitute for the diaphragm and stylus used in recording, a different and more sensitive diaphragm, for purposes of reproduction. In many instances, also, the form of stylus used in reproducing is somewhat modified, as compared with the recording-stylus, as many persons consider the use of a special form of reproducing stylus to be advantageous. In such cases, the required form may be substituted for the recorder quickly and accurately, by the construction I have set forth.

I have shown in the drawings a single diaphragm 18, having two styles 62, of any suitable form. I propose, however, to use, in some instances, two independent diaphragms 18^a, (Fig. 7,) each having its own, independent housing, or chamber 19^a. These parts are mounted upon the supporting arm 21, in the same, or in substantially the same manner as the single diaphragm, the chief difference being that the said supporting-arm is of greater width, in order to accommodate two diaphragms instead of one. The tubes 20 are united by a curved, or yoke-shaped tube 63, with a single sound conveying tube 64, for attaching the concentrator, not shown in the drawings, these being of the ordinary form. In this or similar forms of construction I use the same diaphragms or vibrators and their respective styles or points both for recording and for reproducing, and they may be used simultaneously for recording in duplicate, or for reproducing from the same or different records at the same time, or one only for recording and simultaneously therewith one for reproducing from the record as it is being made or from a separate record, or in various other ways.

The record-receiving material may consist of waxed paper, tin-foil, or other material suitable for the purpose, but I prefer to employ paper, silk, or some similar material for the base, and coat the same with wax, with or without one or more longitudinal grooves, or crimps, formed therein and faced with highly burnished tin-foil. This strip of metal, when combined with waxed paper or other fibrous material, is very useful for the purposes mentioned, the tin-foil at the parts above the said groove, or crimp, being very easily indented by the recording stylus, while the paper, or other base, serves to support and strengthen the tin-foil, and thus diminish the liability of folding, or breaking the same. The

in suitable bearings, preferably of the type known as cone-bearings 18 one of which rests in a seat in a fixed bracket 16, the other extremity of said shaft being held by a set-screw 17, tapped through one wall of the casing, or housing 1. Over this drum, thus supported, is arranged the diaphragm 18, supported in any preferred and familiar manner in a diaphragm-housing, or chamber, 19, which is provided with a central tube 20, opening into said chamber just behind, or above, the central portion of the diaphragm. This tube passes through an opening in an arm, or bar, by which the diaphragm and its chamber are supported. This supporting arm or bar 21 is pivotally connected at one end to a separate arm 22, which is itself, pivotally mounted upon a shaft 23, having cone-shaped extremities which lie in seats formed in the ends of set-screws 24, tapped through lugs 25 which rise from the ends of a bracket-support 26, screwed to the housing. Upon the second arm 22, is mounted a spring 27, which extends beyond the point of pivotal connection 28, between the two arms, the free end of said spring resting upon the arm 21 and pressing the same downward, the free end of said arm, or bar, being supplied with an adjusting and sustaining set-screw 29, which is tapped through a boss on the arm. The point of this screw rests upon the arm 22, which, after dropping somewhat below the point of pivotal connection 28, is extended beneath, and in substantial parallelism with the diaphragm, to a point on the other side thereof, where its end lies beneath the point of the screw 29, (Fig. 2.)

Below the end of the bar 22, and substantially in line with the set-screw 29, is a second set-screw 30, tapped through a bracket 31 and presenting an upwardly turned, conical point, which engages the lower surface of the arm 22. These two set-screws act in unison in the support given to the arms, or bars 21 and 22, and by their reciprocal adjustment the diaphragm may be placed in any required relation to the surface of the drum 8. The bar 22 passes between the latter and the diaphragm, and out of contact with either. One function of said bar is to sustain leaf-springs 32, fastened by one end to the lower surface of the bar, and having their free ends resting upon the record-receiving material as the latter is fed by the drum. These spring-pads have comparatively light tension and by their action give stability and steadiness to the material they act upon.

The record-receiving material is formed, preferably, in the form of tapes, ribbons, or strips, and is wound upon reels, or spools 33, which are mounted upon a shaft 34, the journals of which lie in bearings in inclined brackets 35, mounted upon the base-piece 2. The tapes, strips, or ribbons, are taken from said spools and carried around a guide-roll 36, upon the driving shaft 3. From this roll they pass to the drum 8, and are carried over the top of the latter and between its face and the two frictional feed-rolls 10.

To avoid too rapid pay-off, or unwinding, from the spools, or reels, 33, I provide a brake-lever 37, which is mounted upon a pivot 38 on the brackets, or arms, 35. The lever 37 consists, essentially, of a frame, the parallel arms of which lie close to the outer faces of the brackets 35, the ends which lie next the base-piece 2, being connected by a spindle, or shaft, 39, upon which is mounted a guide-roll 40, beneath which the record-receiving tapes, ribbons, or strips, are conducted in passing to the guide-roll 36. At their opposite ends, the lever-arms 37 are connected by a friction-plate 41, which lies close to, and in comparatively light frictional contact with, the periphery of the spool which carries and pays off the record-receiving material. The friction-surface of the plate 41 is preferably composed of a material 42, of any suitable kind, its choice being controlled, in a measure, by the particular effect desired; such, for example, as the production of a maximum resistance with the minimum of power expended on the lever, &c., the selection of such material being a matter which can be left to the judgment of those skilled in the art.

The brake-lever is actuated by a spring, or springs, 43, connected thereto and to the shaft-supporting brackets 35. The stress, or tension of this spring is quite light and it acts on the lever with a downward pull, or draft, thereby having a tendency to carry the guide-roll 40 downward. When the tension of the record-receiving strips, bands, or ribbons 9 is normal, which will be the case so long as the speed of revolution of the spools 33 is not excessive, the slight pull, or tension, under which the said strips are maintained, will have sufficient action upon the guide-roll 40 to overcome the stress of the spring 43, and the friction-plate 41 will, by the slight turn thus given to the lever, be drawn away from the periphery of the spool. Should the tension, or draft, exerted upon the ribbons, or strips 9, be relaxed, however, by the too rapid pay-off of the spools, the spring 43 will act and the lever 37 will be slightly turned upon its fulcrum, bringing the friction-plate down on the spool and checking, or retarding its movement, until the proper equilibrium is restored.

Upon a shaft 45, mounted in suitable bearings in the casing, or housing, 1, is fixed a pulley 46 to revolve the shaft and operate a speed-governor. The latter consists of a disk 47, revolving in a cylindrical shell, or housing 48, which is rigid upon a supporting bracket 49, and forms a support for one end of the shaft 45. Upon the flat face of the disk 47 are pivotally mounted curved lever-arms 50, extending upon opposite sides of their pivotal attachments 51, and provided with weights 52, which are, in each lever, attached to one arm thereof. It will readily be seen that, by the rotation of the disk 47, the weights 52 will

be thrown outward by centrifugal force, and as they are provided upon their faces with pads 53, of leather, or other suitable material, these will be pressed against the flanges 54 of the casing with a frictional contact proportioned to the centrifugal force exerted. The weights 52 simply increase the effects produced, and may, or may not be used.

In some instances it may be desirable to exert some force upon the frictional pads 53, or on the arms carrying them, to draw said pads away from the flange 54. This may be accomplished in different ways, but one simple method is to connect the ends of the curved arms 50 by means of light springs 55, which may be made adjustable to vary the force exerted. I have indicated this elastic connection, in Fig. 6, by means of dotted lines, but I do not, in any particular, restrict my invention to the use thereof, or to any specific feature of the same.

The automatic speed governor is operated by the frictional engagement of the pulley 46 with a larger friction-gear 7 upon the driving-shaft. As this speed-governor is a separate invention, relatively to the subject-matter of this application, I make no claim thereto, herein, my rights, in this respect, being relegated to a future and separate application for Letters-Patent.

I find it, in practice, advantageous to form circumferential channels 57 in the drum 8, one of said channels being provided for each strip of record-receiving material. Channels or grooves of the same kind are also formed in the spring-pressed rolls 10, as shown in Figs. 2, 3 and 4, said channels, as well as those in the drum 8, being in the vertical plane of the recording-styles, whereby the lines of record are not subjected to surface-contact, or pressure. In the absence of such channels, I preferably cover the drum with a composition of soft rubber and other suitable materials, so that the strip will be supported during the process of recording. Many compounds and some materials are well known to those skilled in the art, which will answer the purpose proposed, without offering any material resistance to the action of the recording stylus. The strips, or ribbons 9, after receiving the record, may be wound spirally, either for transmission by mail, or otherwise, or for filing as retained copies. To facilitate this winding, I provide a flanged reel 58, which may be mounted upon a reel-holder 59, mounted on the prolonged extremity of the driving-shaft, outside the housing 1. This reel-holder consists of a simple cylindrical body, upon which the reel 58 is slipped, a dividing cut 60 being formed therein, to enable it to expand somewhat and grasp the reel-holder, as seen in Fig. 3.

As it may, in some cases, be desirable to provide interchangeable diaphragms, I mount the pivotal connection 28, by which the two supporting-arms 21 and 22 are united, in open seats, or bearings, 28^a, of V-shape. These seats are formed in upwardly turned lugs 61, upon the end of the supporting arm 22, and the pivotal bearing is held in said seats by the leaf-spring 27. The arm 21, together with the diaphragm, its housing, or chamber, and the other adjuncts of said arm, may be readily and instantaneously detached by simply turning the spring 27 upon its pivotal attachment 27^a. This will enable the operator to substitute for the diaphragm and stylus used in recording, a different and more sensitive diaphragm, for purposes of reproduction. In many instances, also, the form of stylus used in reproducing is somewhat modified, as compared with the recording-stylus, as many persons consider the use of a special form of reproducing stylus to be advantageous. In such cases, the required form may be substituted for the recorder quickly and accurately, by the construction I have set forth.

I have shown in the drawings a single diaphragm 18, having two styles 62, of any suitable form. I propose, however, to use, in some instances, two independent diaphragms 18^a, (Fig. 7,) each having its own, independent housing, or chamber 19^a. These parts are mounted upon the supporting arm 21, in the same, or in substantially the same manner as the single diaphragm, the chief difference being that the said supporting-arm is of greater width, in order to accommodate two diaphragms instead of one. The tubes 20 are united by a curved, or yoke-shaped tube 63, with a single sound conveying tube 64, for attaching the concentrator, not shown in the drawings, these being of the ordinary form. In this or similar forms of construction I use the same diaphragms or vibrators and their respective styles or points both for recording and for reproducing, and they may be used simultaneously for recording in duplicate, or for reproducing from the same or different records at the same time, or one only for recording and simultaneously therewith one for reproducing from the record as it is being made or from a separate record, or in various other ways.

The record-receiving material may consist of waxed paper, tin-foil, or other material suitable for the purpose, but I prefer to employ paper, silk, or some similar material for the base, and coat the same with wax, with or without one or more longitudinal grooves, or crimps, formed therein and faced with highly burnished tin-foil. This strip of metal, when combined with waxed paper or other fibrous material, is very useful for the purposes mentioned, the tin-foil at the parts above the said groove, or crimp, being very easily indented by the recording stylus, while the paper, or other base, serves to support and strengthen the tin-foil, and thus diminish the liability of folding, or breaking, the same. The groove, or crimp, one or more, may, if preferred, be formed in the coating of wax, on the strip of paper, or other material, or the base may be

smooth and without any groove, or crimp, whatever.

It is evident that the record-receiving strip may, if necessary, be used singly, upon the mechanism described, or it may be used in duplicate, two or even more of such strips being employed.

What I claim as my invention is—

1. In an apparatus for recording and reproducing articulate speech and other sounds, the combination with a plurality of recording styles, of a corresponding number of independent, flexible strips, ribbons, or bands, of record-receiving material, a pulley supporting the said material and having a plurality of grooves or channels lying in the planes of the recording styles, means for rotating said pulley to feed the strips simultaneously to the recording styles, and spring-pressed rolls holding the said strips, or ribbons upon said supporting pulley, said rolls being provided with peripheral grooves, or channels, lying in the plane of the recording styles, whereby said strips are free from surface-contact, or pressure, along the lines of record, substantially as described.

2. In an apparatus for recording and reproducing articulate speech and other sounds, the combination with a plurality of independent recording styles of a single diaphragm operating the same means for supporting and simultaneously feeding a plurality of record-receiving strips, or ribbons, a pulley having a plurality of grooves or channels lying in the vertical planes of said styles to support the strips and give feed-movement thereto, and spring-pressed rolls bearing upon said strips after they have passed beneath the styles said rolls being provided with channels or grooves lying in the vertical planes of the styles, whereby the lines of record are free from surface-contact, or pressure, substantially as described.

3. In an apparatus for recording and reproducing articulate speech and other sounds, the combination with one or more rotating drums, supporting a plurality of strips, bands, or ribbons each adapted to receive a record, simultaneously, of a plurality of recording styles, a pay-off roll, from which said strips, bands, or ribbons, are taken, a lever fulcrumed between its ends and bearing upon one extremity a guide-roll, or rolls, pressed by the paid-off strips in one direction and by a spring in the other direction, and provided at its other extremity with a friction-plate lying near the periphery of the reel, with which it is engaged by the action of the spring, when the tension of the record-receiving strips is relaxed, substantially as described.

4. In an apparatus for recording and reproducing articulate speech and other sounds, the combination with the recording devices of means for supporting and feeding the record-receiving material, a spool from which said material is paid off, an automatic friction-brake, consisting of a spring-engaged lever having a friction-plate on one end and a guide-roll on the other end, engaged by the paid-off strip or strips of material, and an automatic speed-governor on a driving-shaft, consisting of a disk, rigid on said shaft, lever-arms fulcrumed thereon, and a fixed flange against which friction-pads on said arms are projected with a bearing proportioned to the centrifugal force developed, substantially as described.

5. In an apparatus for recording and reproducing articulate speech and other sounds, the combination with means for supporting and feeding the record-receiving material, of a diaphragm having a chamber, and having a removable and interchangeable supporting-arm, having a pivotal connection, and a permanently pivoted arm having seats for said connection, substantially as described.

6. In an apparatus for recording and reproducing articulate speech and other sounds, the combination with means for supporting and feeding the record-receiving material, of an interchangeable supporting arm carrying the diaphragm and style, and an arm supporting the interchangeable arm, the latter of said arms having pivotal hinged connection with the frame of the machine, and the former of said arms being pivotally connected with or hinged to the latter arm, substantially as described.

7. In an apparatus for recording and reproducing articulate speech and other sounds the combination of one or more rotating drums or rollers, over which the material in ribbon-form is fed by the aid of friction-rollers, means for holding and guiding the material, and means for recording the sounds thereon or reproducing the sounds therefrom in duplicate or otherwise, substantially as described.

8. In an apparatus for recording and reproducing articulate speech and other sounds, a rotating support over which the material is frictionally carried, provided with a circumferential groove or channel substantially as shown.

In testimony whereof I have affixed my signature in presence of two witnesses.

CHARLES ADAMS RANDALL.

Witnesses:
GEO. J. B. FRANKLIN,
F. J. OSMAN,
Both of 17 *Gracechurch Street, London, E. C.*

858

(No Model.)

3 Sheets—Sheet 1.

T. A. EDISON.

PHONOGRAPH.

No. 513,095. Patented Jan. 23, 1894.

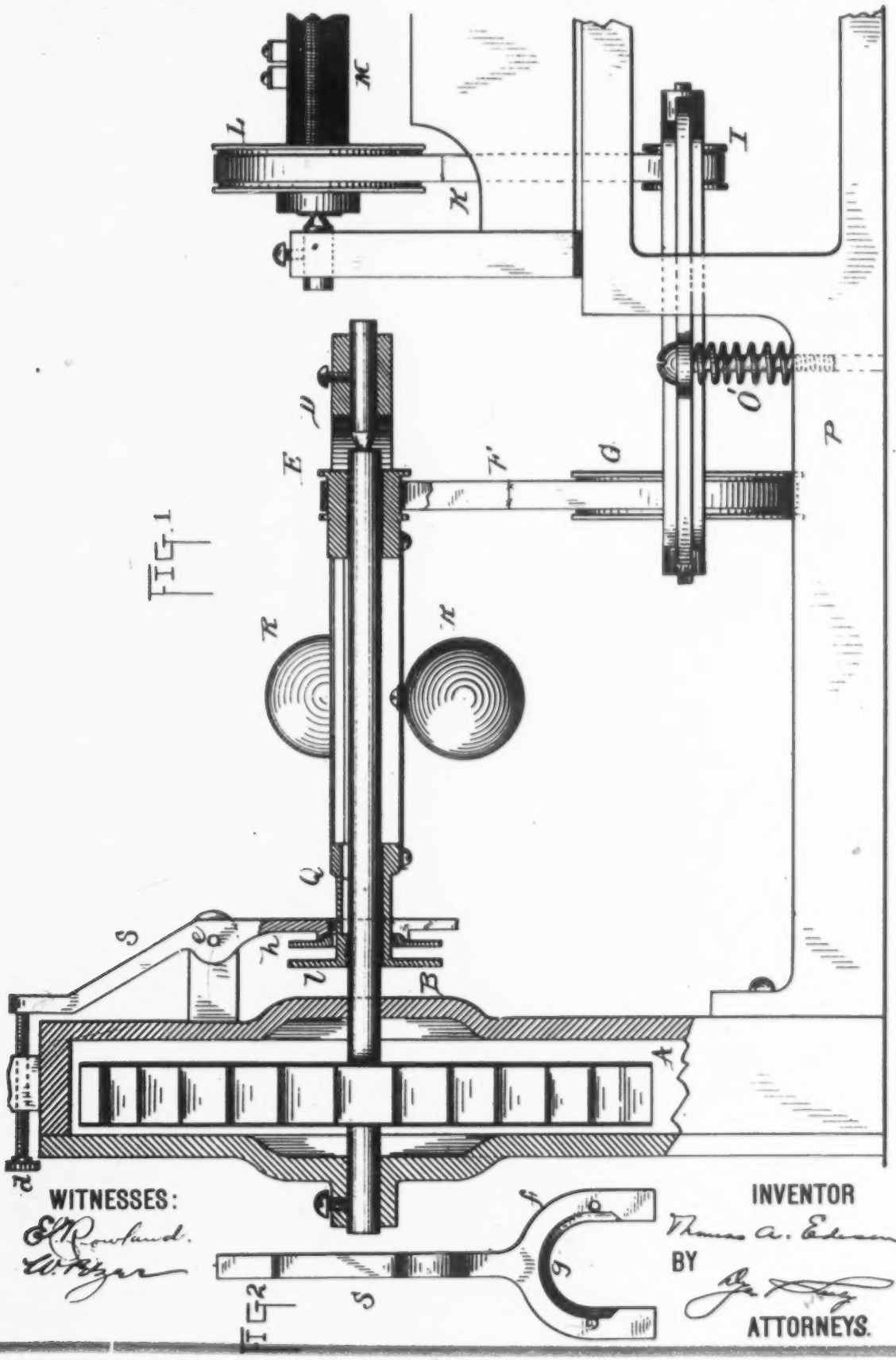

860
(No Model.)

3 Sheets—Sheet 2.

T. A. EDISON.

PHONOGRAPH.

No. 513,095. Patented Jan. 23, 1894.

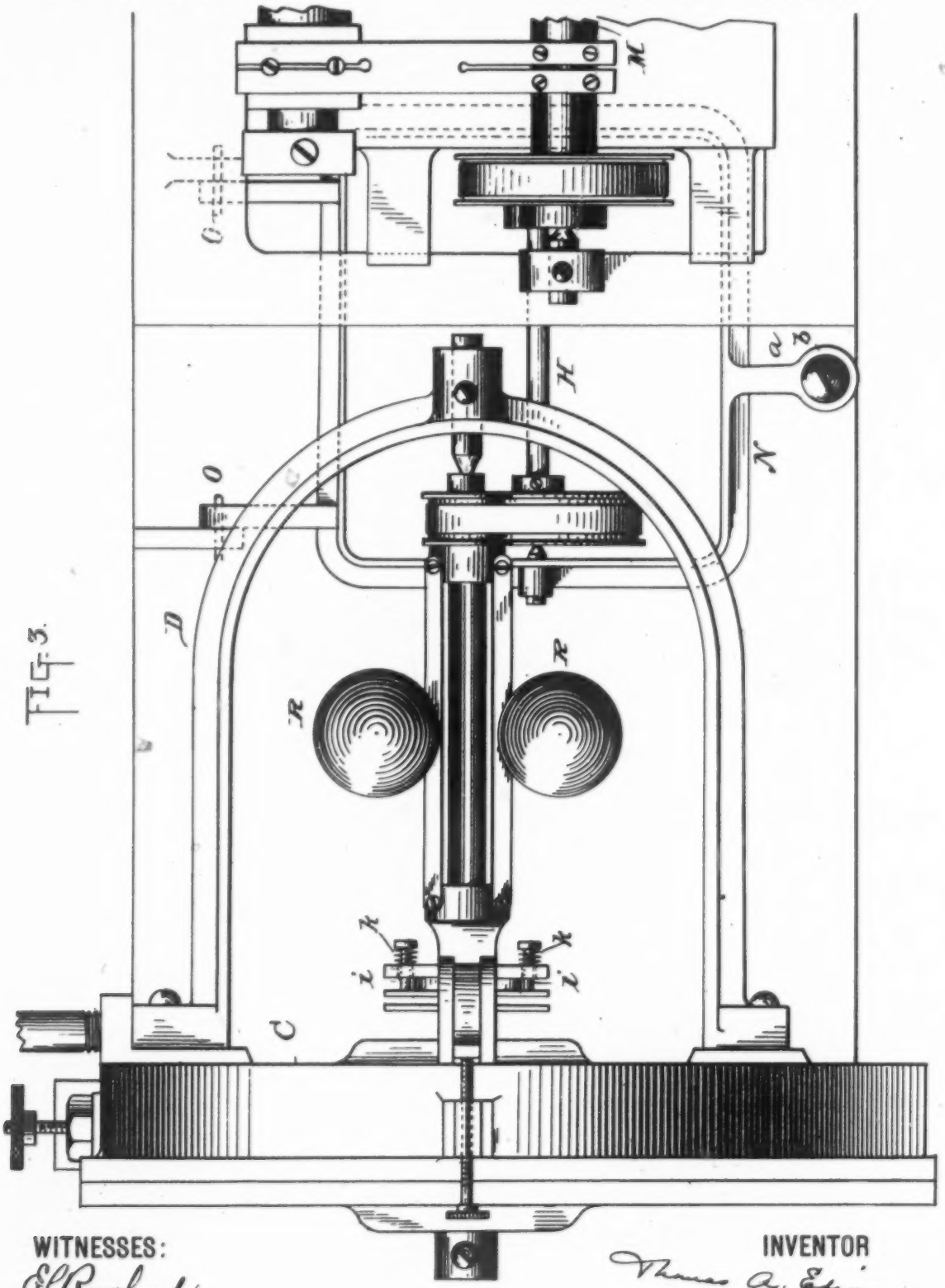

FIG. 3.

WITNESSES:
E. C. Rowland
W. Pelzer

INVENTOR
Thomas A. Edison
BY
Dyer & Seely
ATTORNEYS.

862

(No Model.)

3 Sheets—Sheet 3.

T. A. EDISON.

PHONOGRAPH.

No. 513,095.

Patented Jan. 23, 1894.

FIG. 4.

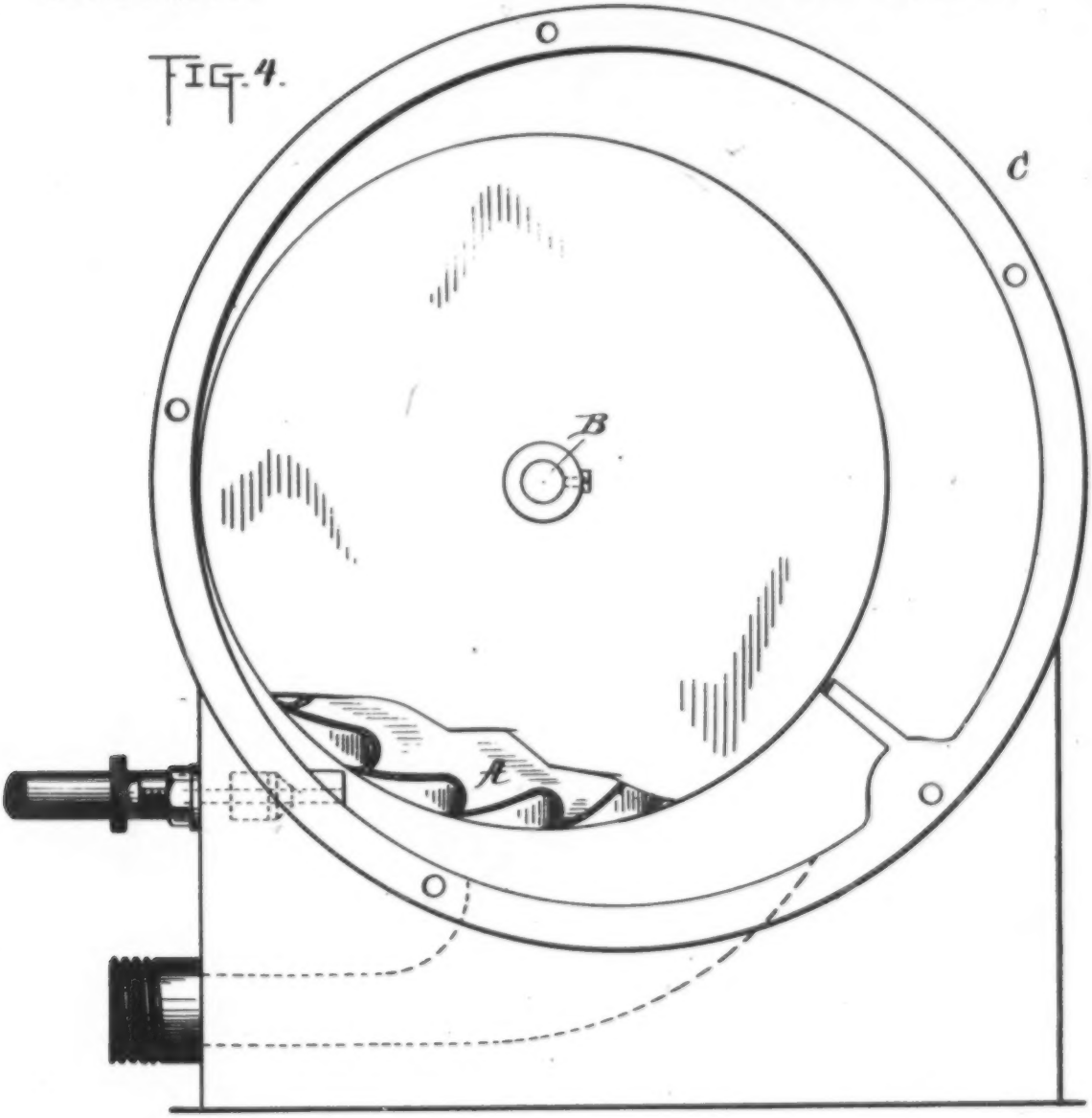

WITNESSES:

E. C. Rowland

W. Kleyer

INVENTOR

Thomas A. Edison

BY

Geo. Lutz

UNITED STATES PATENT OFFICE.

THOMAS A. EDISON, OF LLEWELLYN PARK, NEW JERSEY.

PHONOGRAPH.

SPECIFICATION forming part of Letters Patent No. 513,095, dated January 23, 1894.

Application filed December 27, 1889. Serial No. 335,140. (No model.)

To all whom it may concern:

Be it known that I, THOMAS A. EDISON, a citizen of the United States, residing at Llewellyn Park, in the county of Essex and State of New Jersey, have invented a certain new and useful Improvement in Phonographs, (Case No. 849,) of which the following is a specification.

This invention relates to motors for operating phonographs, to the connections between such motors and the phonograph itself, and to the devices for regulating the speed of the phonograph. I have heretofore usually employed an electric motor connected by belts with the feed screw of the phonograph and provided with a governor for regulating the speed which operated by breaking the motor circuit temporarily when the speed became too great. In my present invention I make use, preferably, of a hydraulic motor or water wheel placed on a shaft parallel with the feed screw and connected by belts and a countershaft which reduce the speed, with said feed screw. In connection with the motor I employ a centrifugal governor operating by the application of friction to a turning part and I make use of a loose friction shoe as one of the friction surfaces which always seats itself perfectly on the application of the friction and so makes the governing accurate and even.

My invention further includes a simple and effective arrangement for maintaining tension on the belts which connect the motor with the feed screw and for adjusting said tension when required.

My invention is illustrated in the accompanying drawings.

Figure 1 is a side elevation and partial section of the motor and governor and the connecting devices; Fig. 2, an elevation of the adjustable arm of the governor; Fig. 3, a top view of the motor governing and connecting devices, and Fig. 4, an end view of the motor with part of the case removed.

I have shown a simple form of water wheel A placed on the shaft B within the case C. A bracket D extends from the case C and supports the outer end of the shaft B. Upon said shaft is a pulley E connected by a belt F with feed screw M, which, as will be understood, carries the phonogram cylinder (not shown). The wheels G and I are supported in bearings on a frame N, the rear portion of which is hinged at O. A lug *a* extends from the front of the frame N and through this passes a screw *b* which enters the supporting base P of the machine.

Upon the screw *b* between the base P and frame N is coiled a spring O′ so that the frame N is supported upon said spring and may be adjusted upon its hinges by adjusting the screw *b* to alter the tension of said spring. The pulleys G and I being supported by the movable frame N below the relatively stationary pulleys E and L, it will be seen that the tension of the belts F and K is dependent upon the height to which said frame is adjusted and that the belts may therefore be both tightened or loosened by screwing the screw *b* in or out.

Upon the shaft B is placed the sliding sleeve Q to which are attached the governor balls R. An arm S rests at its upper end against an adjusting screw *d*, is pivoted at *e* and terminates at a fork *f* through which the shaft B and sleeve Q pass. The fork *f* has on its face a curved rim *g* within which is a flanged disk *h* placed loosely over the sleeve Q. The disk *h* is held by pins *i* which pass loosely through the sides of the fork *f* and springs *k* are placed between the fork and the heads of said screws, so that the disk *h* is enabled to yield and to rock back toward the fork *f*, being however normally held parallel to the fork by the springs; at the inner end of the sleeve Q is a disk or flange *l*. It will be seen that when the speed of the motor becomes too great the governing balls will fly out and draw the disks *l* against the disks *h* whereby a friction is produced which will retard the motion and slacken the speed. The friction regulation shown and described is particularly adapted to use with the phonograph in which it is necessary that the regulation shall not be of uneven or jerky character.

While it is not essential in the phonograph that the speed shall be absolutely

PHONOGRAPH.

No. 513,095. Patented Jan. 23, 1894.

FIG. 4.

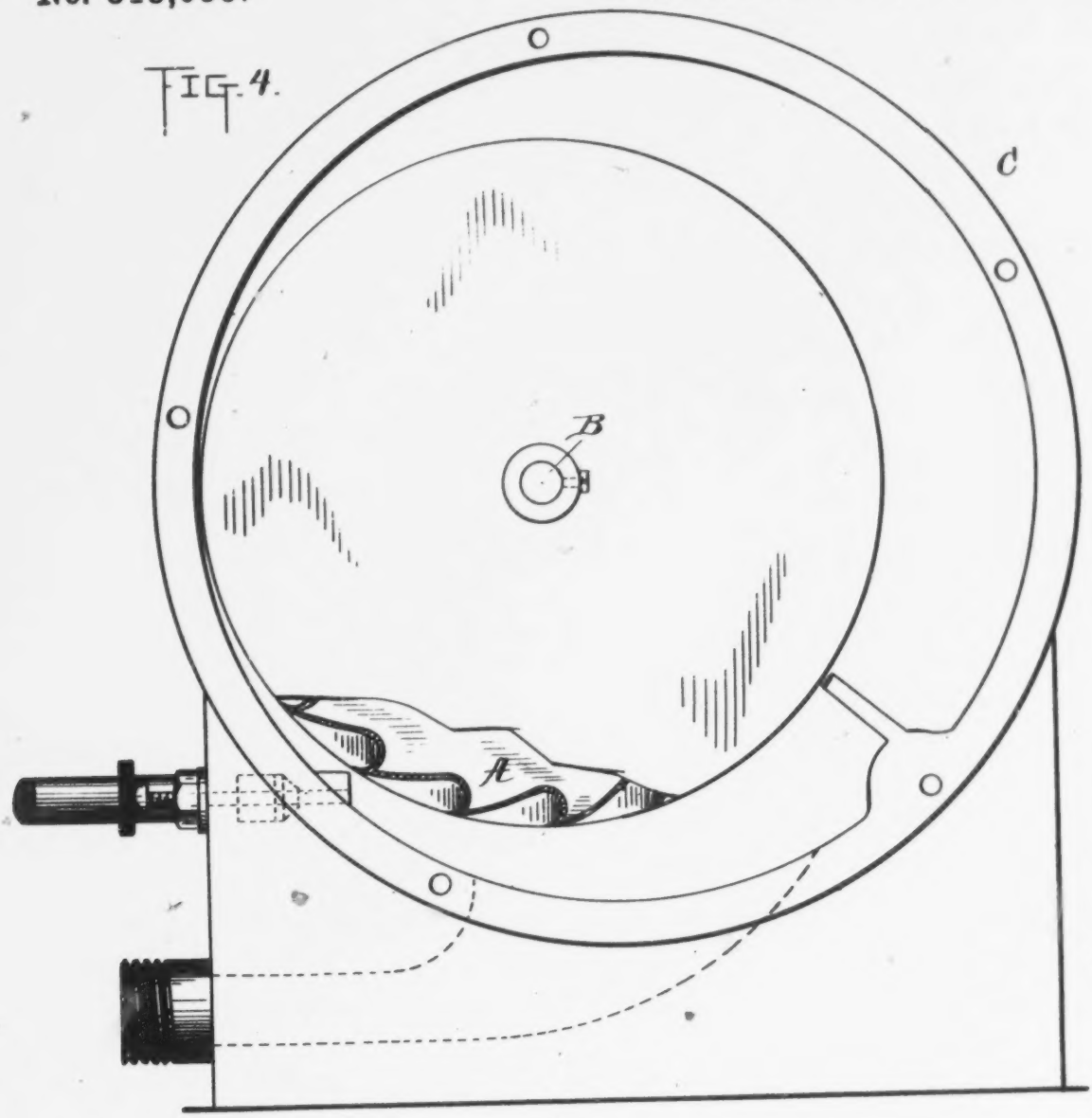

WITNESSES:
E. L. Rowland
W. Wyer

INVENTOR.
Thomas A. Edison
BY
ATTORNEYS.

UNITED STATES PATENT OFFICE.

THOMAS A. EDISON, OF LLEWELLYN PARK, NEW JERSEY.

PHONOGRAPH.

SPECIFICATION forming part of Letters Patent No. 513,095, dated January 23, 1894.

Application filed December 27, 1889. Serial No. 335,140. (No model.)

To all whom it may concern:

Be it known that I, THOMAS A. EDISON, a citizen of the United States, residing at Llewellyn Park, in the county of Essex and State of New Jersey, have invented a certain new and useful Improvement in Phonographs, (Case No. 849,) of which the following is a specification.

This invention relates to motors for operating phonographs, to the connections between such motors and the phonograph itself, and to the devices for regulating the speed of the phonograph. I have heretofore usually employed an electric motor connected by belts with the feed screw of the phonograph and provided with a governor for regulating the speed which operated by breaking the motor circuit temporarily when the speed became too great. In my present invention I make use, preferably, of a hydraulic motor or water wheel placed on a shaft parallel with the feed screw and connected by belts and a countershaft which reduce the speed, with said feed screw. In connection with the motor I employ a centrifugal governor operating by the application of friction to a turning part and I make use of a loose friction shoe as one of the friction surfaces which always seats itself perfectly on the application of the friction and so makes the governing accurate and even.

My invention further includes a simple and effective arrangement for maintaining tension on the belts which connect the motor with the feed screw and for adjusting said tension when required.

My invention is illustrated in the accompanying drawings.

Figure 1 is a side elevation and partial section of the motor and governor and the connecting devices; Fig. 2, an elevation of the adjustable arm of the governor; Fig. 3, a top view of the motor governing and connecting devices, and Fig. 4, an end view of the motor with part of the case removed.

I have shown a simple form of water wheel A placed on the shaft B within the case C. A bracket D extends from the case C and supports the outer end of the shaft B. Upon said shaft is a pulley E connected by a belt F with a grooved wheel G on a spindle H which has also upon it a pulley I connected by a belt K with a grooved wheel L on the phonograph feed screw M, which, as will be understood, carries the phonogram cylinder (not shown). The wheels G and I are supported in bearings on a frame N, the rear portion of which is hinged at O. A lug *a* extends from the front of the frame N and through this passes a screw *b* which enters the supporting base P of the machine.

Upon the screw *b* between the base P and frame N is coiled a spring O′ so that the frame N is supported upon said spring and may be adjusted upon its hinges by adjusting the screw *b* to alter the tension of said spring. The pulleys G and I being supported by the movable frame N below the relatively stationary pulleys E and L, it will be seen that the tension of the belts F and K is dependent upon the height to which said frame is adjusted and that the belts may therefore be both tightened or loosened by screwing the screw *b* in or out.

Upon the shaft B is placed the sliding sleeve Q to which are attached the governor balls R. An arm S rests at its upper end against an adjusting screw *d*, is pivoted at *e* and terminates at a fork *f* through which the shaft B and sleeve Q pass. The fork *f* has on its face a curved rim *g* within which is a flanged disk *h* placed loosely over the sleeve Q. The disk *h* is held by pins *i* which pass loosely through the sides of the fork *f* and springs *k* are placed between the fork and the heads of said screws, so that the disk *h* is enabled to yield and to rock back toward the fork *f*, being however normally held parallel to the fork by the springs; at the inner end of the sleeve Q is a disk or flange *l*. It will be seen that when the speed of the motor becomes too great the governing balls will fly out and drive the disks *l* against the disks *h* whereby a friction is produced which will retard the motion and slacken the speed. The friction regulation shown and described is particularly adapted to use with the phonograph in which it is necessary that the regulation shall not be of uneven or jerky character.

While it is not essential in the phonograph that the speed shall be absolutely constant at all times, it is necessary for the best reproduction and especially for the reproduction of music that the speed of any short interval

of time shall be substantially the same, that is for instance, that during any one revolution of the phonograph there shall be no substantial change of speed, since an alteration of speed under such circumstances will alter the pitch of the sound and so destroy any musical effect; by employing the loose friction shoe which will always engage the turning disk in the same position because it seats itself perfectly at all times against it this result is accomplished. With rigidly supported disks the necessary inaccuracies in mechanical construction will cause uneven friction at different parts of the same revolution and so the speed will vary at these times; but with the arrangement described the degree of friction will remain the same during the whole revolution. The degree of speed at which the friction will be applied may be determined by adjusting the screw *d* so as to move the fork *f*.

The use of this character of governor is also particularly applicable to the operation of phonographs by water motors in which the speed is apt to be varied in consequence of variations in pressure and in which the ordinary mode of regulation by cutting off the supply will be likely to produce irregular variations of speed.

What I claim is—

1. In a phonograph, the combination of the feed screw, a rotating motor having its shaft geared to said feed-screw, a centrifugal governor on the motor shaft, a friction disk connected with the governor, and another friction member with which said friction disk engages, one of said friction members being a rocking shoe, substantially as set forth.

2. In a phonograph, the combination of the feed-screw, a rotating motor having its shaft geared to said feed-screw, a centrifugal governor on the motor shaft, a friction disk connected with the governor, and a rockingspring supported stationary disk with which said friction disk engages, substantially as set forth.

3. In a phonograph, the combination of the feed screw, a rotating motor having its shaft geared to the feed screw, a centrifugal governor on the motor of the shaft, a friction disk connected with the governor, and another friction disk the same being stationary and pivoted and provided with a yielding support enabling it to rock on its pivot, substantially as set forth.

4. In a phonograph, the combination of the feed-screw, the rotating motor, the pulley on the shaft of the feed-screw, the pulley on the motor shaft, the two intermediate pulleys, the connecting belts and the adjustable frame carrying said intermediate pulleys, substantially as set forth.

This specification signed and witnessed the 11th day of December, 1889.

THOS. A. EDISON.

Witnesses:
D. H. DRISCOLL,
W. PELZER.

(No Model.)

4 Sheets—Sheet 1.

E. BERLINER.

GRAMOPHONE.

No. 534,543.

Patented Feb. 19, 1895.

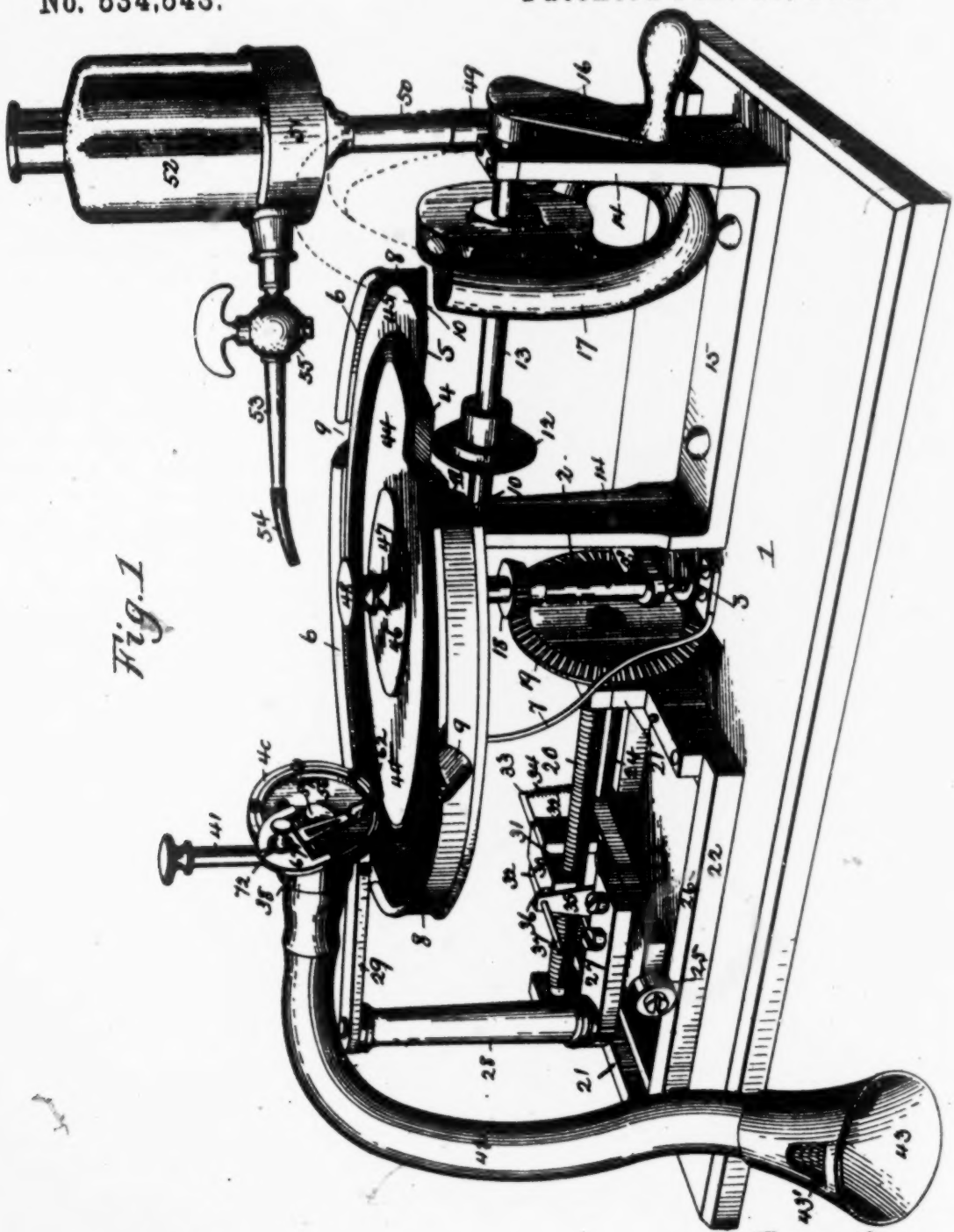

Fig. 1.

Witnesses;
Percy C. Bowen
F. T. Chapman

Inventor;
Emile Berliner
By Joseph Lyons,
Attorney.

868

(No Model.) 4 Sheets—Sheet 2.

E. BERLINER.

GRAMOPHONE.

No. 534,543. Patented Feb. 19, 1895.

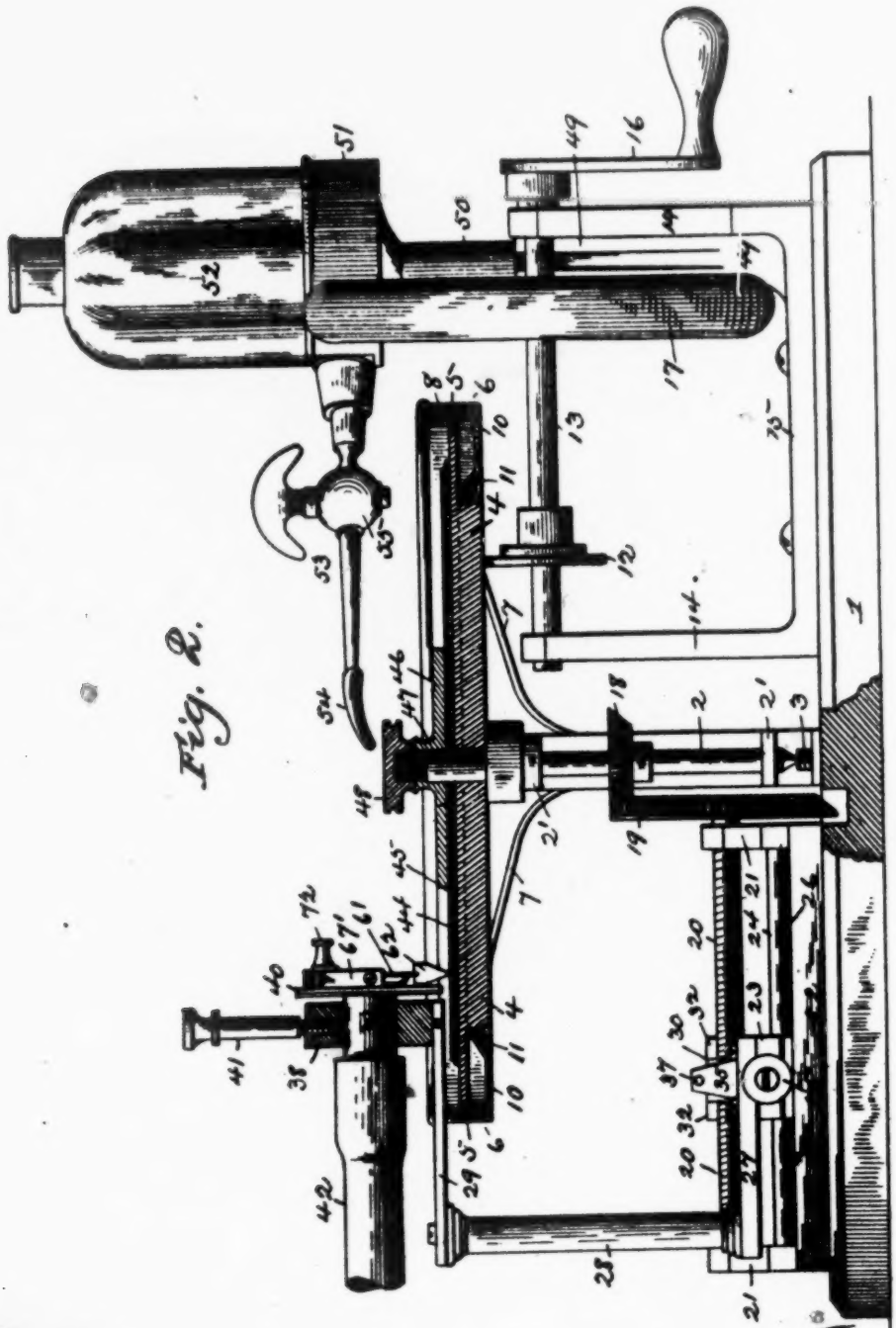

Fig. 2.

Witnesses:
J. B. McGirr.
F. T. Chapman

Inventor,
Emile Berliner,
By Joseph Lyons.
Attorney

870

(No Model.) 4 Sheets—Sheet 3.

E. BERLINER.

GRAMOPHONE.

No. 534,543. Patented Feb. 19, 1895.

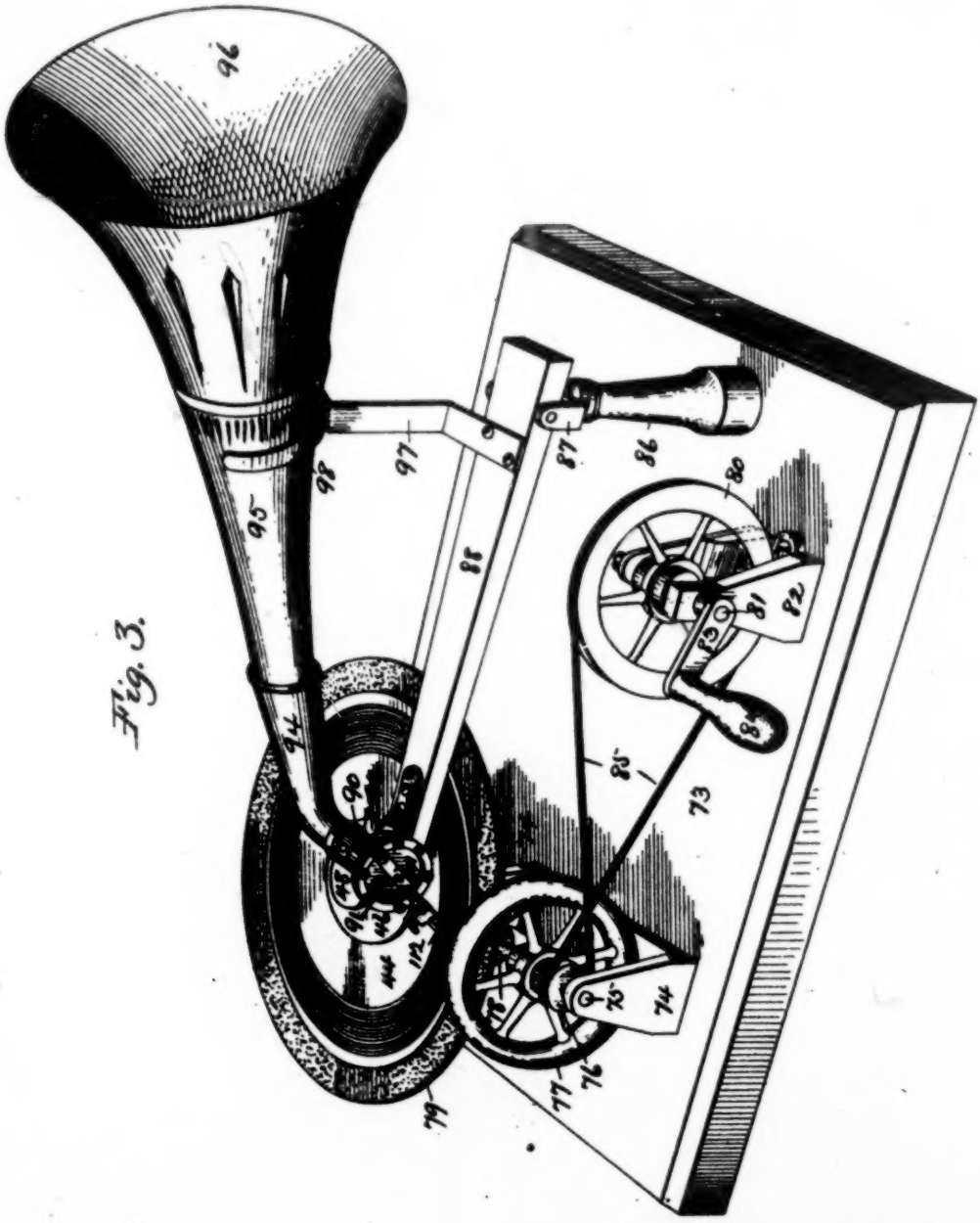

Fig. 3.

Witnesses:
Percy C. Bowen
H. T. Chapman

Inventor:
Emile Berliner,
By Joseph Lyon.
Attorney.

872

(No Model.) 4 Sheets—Sheet 4.

E. BERLINER.

GRAMOPHONE.

No. 534,543. Patented Feb. 19, 1895.

Fig. 4.

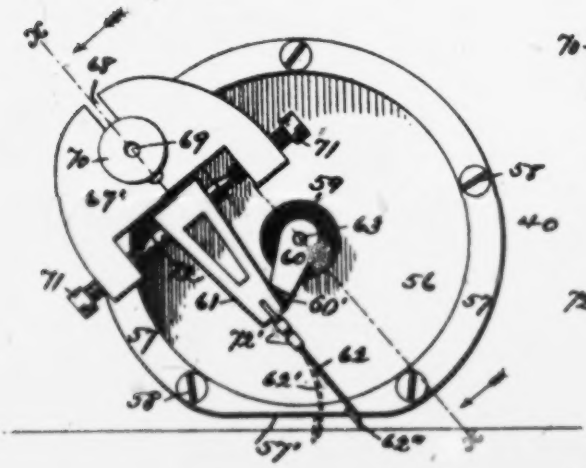

Fig. 5.

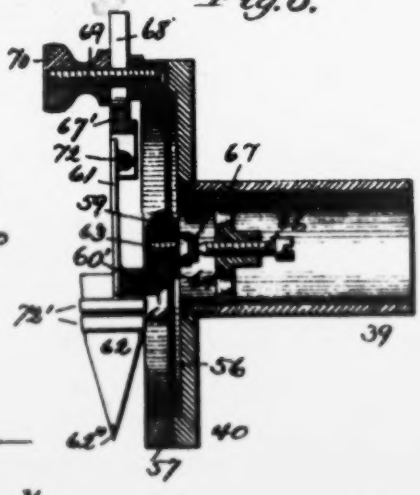

Fig. 6.

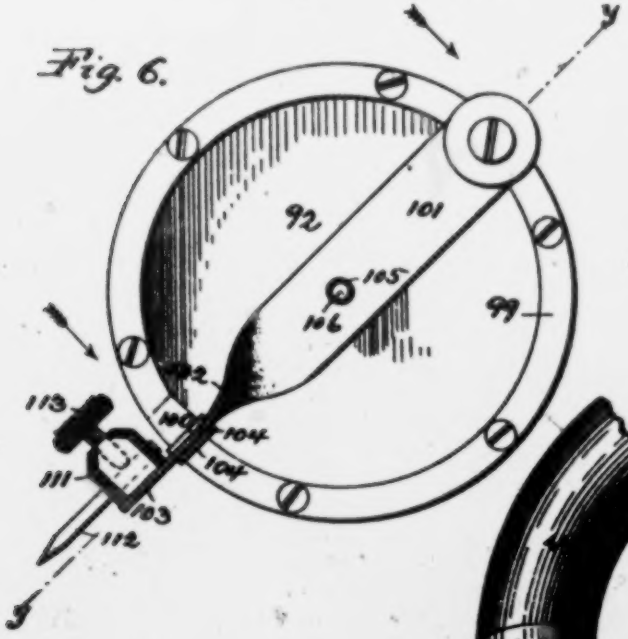

Fig. 7.

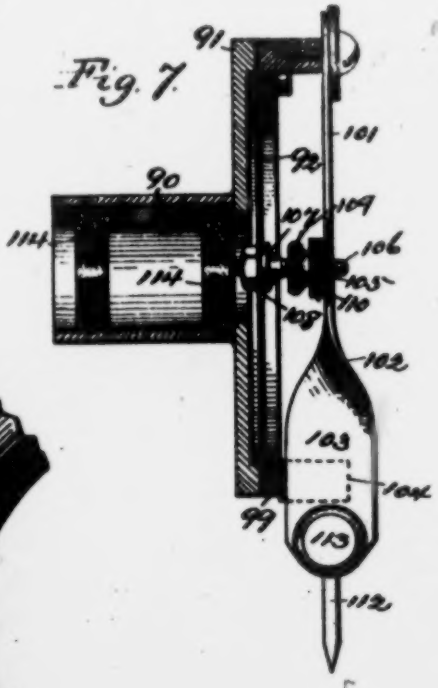

Fig. 8.

Witnesses:
Percy C. Brown
G. F. Chapman

Inventor:
Emile Berliner,
By Joseph Lyon,
Attorney.

UNITED STATES PATENT OFFICE.

EMILE BERLINER, OF WASHINGTON, DISTRICT OF COLUMBIA, ASSIGNOR TO THE UNITED STATES GRAMOPHONE COMPANY, OF SAME PLACE.

GRAMOPHONE.

SPECIFICATION forming part of Letters Patent No. 534,543, dated February 19, 1895.

Application filed March 30, 1892. Serial No. 427,060. (No model.)

To all whom it may concern:

Be it known that I, EMILE BERLINER, a citizen of the United States, and a resident of Washington, District of Columbia, have invented certain new and useful Improvements in Gramophones, of which the following is a specification.

My invention has reference to improvements in the method of and apparatus for recording and reproducing sounds, the improvements being more particularly directed to the construction of that kind of sound recording and reproducing apparatus which I have called "gramophone," and for which Letters Patent of the United States No. 382,790, dated May 15, 1888, have been granted to me.

One feature of my invention has reference to improvements in the method of recording sound by tracing upon a fatty film deposited upon a metallic surface, undulatory lines, corresponding to sound waves, and then etching such lines in the metal base, or as it is now commonly called, the record tablet; while the other features of my invention have reference to the construction of the details of both the recorder and the reproducer of the gramophone. Each of these features of improvement are designed to overcome certain difficulties, and to avoid certain imperfections heretofore met with in the operation of the gramophone. These difficulties and imperfections, and the manner in which they are avoided, will be particularly pointed out in the following detailed description with reference to the accompanying drawings, in which—

Figure 1, is a perspective view of my improved gramophone recorder. Fig. 2 is a side elevation, partly in section, of the recorder. Fig. 3 is a perspective view of a gramophone reproducer. Fig. 4, is an elevation of a recording diaphragm and stylus. Fig. 5, is a section of the same on the line x—x of Fig. 4. Fig. 6, is an elevation of the gramophone reproducing diaphragm and stylus. Fig. 7, is a section of the same on line y—y of Fig. 6, and Fig. 8, is a perspective view of an improved mouth-piece for the recorder.

As a whole in Figs. 1 and 2, mounted upon a suitable base 1. About midway of the length of this base there is an upright shaft 2, journaled in brackets 2′, 2′, stepped at its lower end in a suitable bearing 3. This shaft carries at its upper end a circular disk 4, the outer or peripheral portion of which is reduced in thickness as shown at 5, and this reduced portion extends over a ring shaped pan 6, supported by stays or brackets 7, from which it may be lifted and removed, when required. The outer edge or wall 8, of the pan is of sufficient height to project for a distance above the disk 4, and is provided with pouring lips 9, for a purpose hereinafter described. The bottom 10 of the pan extends under the reduced portion 5, of the disk 4, and its inner edge 11, is upturned close to the under side of the reduced portion of the disk, as shown.

Bearing against the under side of the disk 4, is a friction wheel 12, secured to a horizontal shaft 13, which latter is journaled in the upper ends of posts or uprights 14 constituting the ends of a frame, the base 15, of which is secured to the base 1 of the apparatus. The position of shaft 13, and the diameter of the friction wheel 12, are such, that a portion of the weight of the disk 4, and of its shaft 2, is supported by the friction wheel; whereby the bearing 3, is relieved from a portion of that weight, and whereby frictional gearing between the disk 4 and wheel 12 is insured, without requiring special adjustment. The shaft 13, carries at its outer end a crank 16, by means of which it is rotated, and between the two uprights 14, there is secured to the shaft a heavy fly or balance wheel 17. Secured to the upright shaft 2, below the disk 4, there is a beveled pinion 18, meshing with a large bevel gear 19, on one end of a horizontal screw-threaded shaft 20, which is arranged radial to the disk 4, and journaled adjacent to the said gear 19, and also at the other end, in pillow-blocks 21, supported on the end piece of a rectangular frame 22, which in turn is fast on the base 1. Mounted upon the frame 22, so as to be moyable thereon in

(No Model.) 4 Sheets—Sheet 4.

E. BERLINER.

GRAMOPHONE.

No. 534,543. Patented Feb. 19, 1895.

Fig. 4.

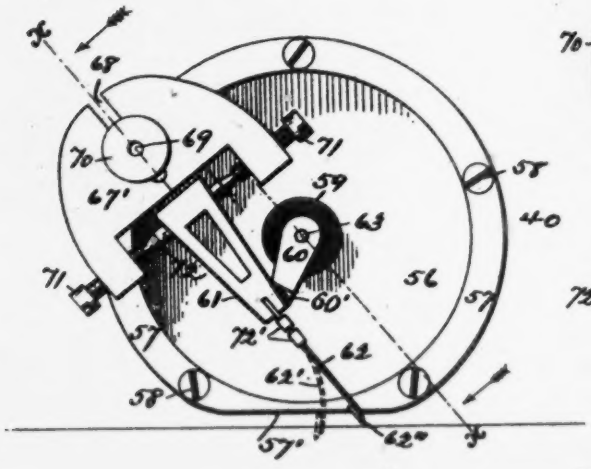

Fig. 5.

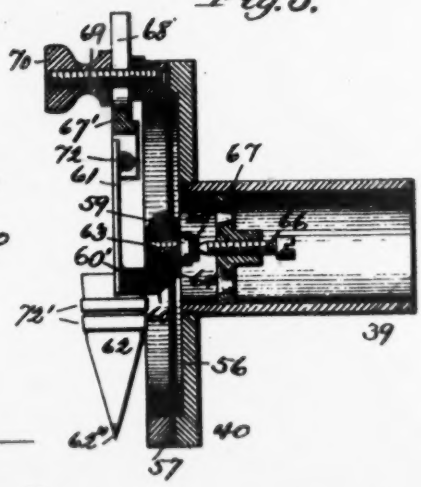

Fig. 6.

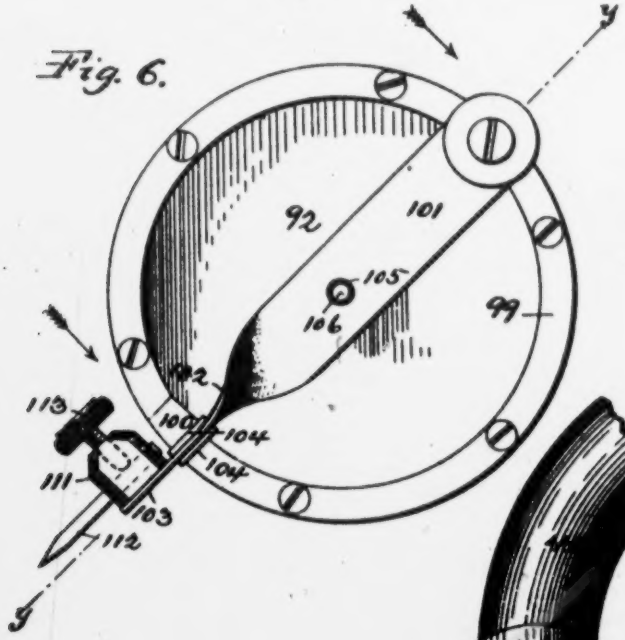

Fig. 7.

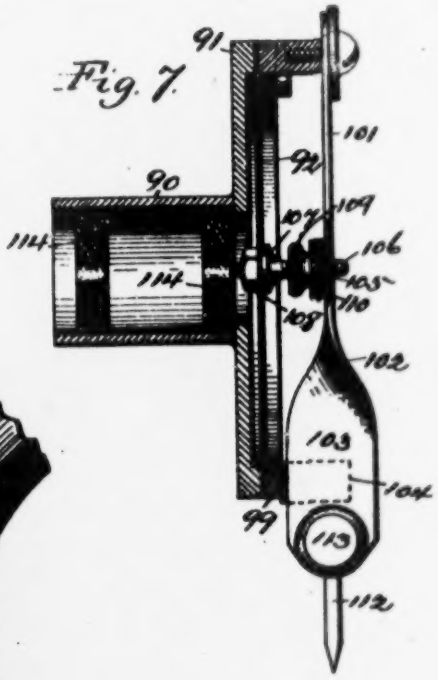

Fig. 8.

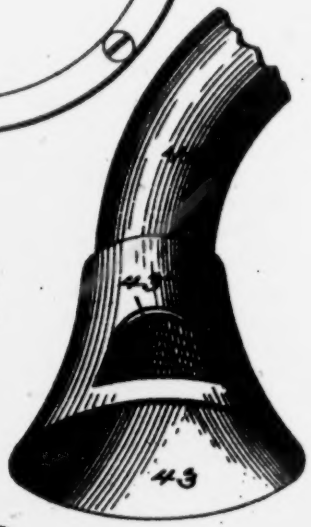

Witnesses;

Percy C. Bowen

F. T. Chapman

Inventor;

Emile Berliner,

By Joseph Lyons.

Attorney.

UNITED STATES PATENT OFFICE.

EMILE BERLINER, OF WASHINGTON, DISTRICT OF COLUMBIA, ASSIGNOR TO THE UNITED STATES GRAMOPHONE COMPANY, OF SAME PLACE.

GRAMOPHONE.

SPECIFICATION forming part of Letters Patent No. 534,543, dated February 19, 1895.

Application filed March 30, 1892. Serial No. 427,060. (No model.)

To all whom it may concern:

Be it known that I, EMILE BERLINER, a citizen of the United States, and a resident of Washington, District of Columbia, have invented certain new and useful Improvements in Gramophones, of which the following is a specification.

My invention has reference to improvements in the method of and apparatus for recording and reproducing sounds, the improvements being more particularly directed to the construction of that kind of sound recording and reproducing apparatus which I have called "gramophone," and for which Letters Patent of the United States No. 382,790, dated May 15, 1888, have been granted to me.

One feature of my invention has reference to improvements in the method of recording sound by tracing upon a fatty film deposited upon a metallic surface, undulatory lines, corresponding to sound waves, and then etching such lines in the metal base, or as it is now commonly called, the record tablet; while the other features of my invention have reference to the construction of the details of both the recorder and the reproducer of the gramophone. Each of these features of improvement are designed to overcome certain difficulties, and to avoid certain imperfections heretofore met with in the operation of the gramophone. These difficulties and imperfections, and the manner in which they are avoided, will be particularly pointed out in the following detailed description with reference to the accompanying drawings, in which—

Figure 1, is a perspective view of my improved gramophone recorder. Fig. 2 is a side elevation, partly in section, of the recorder. Fig. 3 is a perspective view of a gramophone reproducer. Fig. 4, is an elevation of a recording diaphragm and stylus. Fig. 5, is a section of the same on the line x—x of Fig. 4. Fig. 6, is an elevation of the gramophone reproducing diaphragm and stylus. Fig. 7, is a section of the same on line y—y of Fig. 6, and Fig. 8, is a perspective view of an improved mouth-piece for the recorder.

Like numerals of reference indicate like parts throughout the drawings.

My improved gramophone recorder is shown as a whole in Figs. 1 and 2, mounted upon a suitable base 1. About midway of the length of this base there is an upright shaft 2, journaled in brackets 2′, 2′, stepped at its lower end in a suitable bearing 3. This shaft carries at its upper end a circular disk 4, the outer or peripheral portion of which is reduced in thickness as shown at 5, and this reduced portion extends over a ring shaped pan 6, supported by stays or brackets 7, from which it may be lifted and removed, when required. The outer edge or wall 8, of the pan is of sufficient height to project for a distance above the disk 4, and is provided with pouring lips 9, for a purpose hereinafter described. The bottom 10 of the pan extends under the reduced portion 5, of the disk 4, and its inner edge 11, is upturned close to the under side of the reduced portion of the disk, as shown.

Bearing against the under side of the disk 4, is a friction wheel 12, secured to a horizontal shaft 13, which latter is journaled in the upper ends of posts or uprights 14 constituting the ends of a frame, the base 15, of which is secured to the base 1 of the apparatus. The position of shaft 13, and the diameter of the friction wheel 12, are such, that a portion of the weight of the disk 4, and of its shaft 2, is supported by the friction wheel; whereby the bearing 3, is relieved from a portion of that weight, and whereby frictional gearing between the disk 4 and wheel 12 is insured, without requiring special adjustment. The shaft 13, carries at its outer end a crank 16, by means of which it is rotated, and between the two uprights 14, there is secured to the shaft a heavy fly or balance wheel 17. Secured to the upright shaft 2, below the disk 4, there is a beveled pinion 18, meshing with a large bevel gear 19, on one end of a horizontal screw-threaded shaft 20, which is arranged radial to the disk 4, and journaled adjacent to the said gear 19, and also at the other end, in pillow-blocks 21, supported on the end piece of a rectangular frame 22, which in turn is fast on the base 1. Mounted upon the frame 22, so as to be movable thereon in the direction of the length of the shaft 20, there is a carriage 23, supported at one end by a guide rod 24, on which it is free to slide, and at the other end by a roller 25, movable

along the upper surface 26, of one of the side pieces of the frame 22. The carriage 23, has firmly secured to it a projecting arm 27, on the outer end of which is an upright post 28, carrying at its upper end an arm 29, parallel with the arm 27, and of such length as to overhang the disk 4, when the carriage is moved to the right, as represented in the drawings; the construction being such, that when the carriage 23 is moved in the manner to be described, the arm 29, will be carried radially over the disk 4, and any object carried thereby will participate in said movement.

The carriage 23, is moved in one direction by means of the screw-threaded shaft 20, and in order to effect this operation, there is provided a block 30, in one side of which, near one end, is formed a half nut 31, constructed to engage the threads on the shaft 20; and this block 30, is pivotally supported between ears 32, erected on the carriage 23. Projecting from the other end of the block 30, there is a pin 33, to which one end of a spring 34, is attached, the other end of said spring being secured to the carriage 23, and the tendency of the spring is to maintain the block 30, in a tilted position with the nut portion raised out of engagement with the shaft 20. In order to lock the block 30, in engagement with the shaft 20 there is provided a leaf spring 35, mounted on the carriage 20, opposite the free end of the block 30, and having on its free end a tooth 36, which passes over the top of the hinged block 30, when the nut formed in the same is in engagement with the screw threads on the shaft 20, the tendency of the leaf spring 35, being to move inwardly toward the block 30. This catch spring 35, is also provided with a pin 37, which serves as a handle for withdrawing the catch so as to unlock the block 30, and thereby allow the carriage 23 with its appurtenances to be freely moved to any position upon the frame 22.

To the free overhanging arm 29, is secured a ring sleeve 38 which receives the neck 39, projecting on one side from the frame 40, in which latter the recording diaphragm and stylus are mounted, and this neck 39, with its appurtenances is fixed in any desired position in the ring frame 38, by a clamp screw 41. The free end of the neck 39, projects beyond the ring frame 38, and receives the sound conveying tube 42, which is preferably made flexible, and which has at its free end a mouth-piece 43, the particular construction of which will hereinafter be more fully described.

The disk 4, which is in the nature of a rotary table, has hereinbefore been described and is shown in the drawings as reduced in thickness on that portion of the periphery which overlies the inner wall of the pan 6, tance of the upper edge of the inner wall 11, of the pan, while the upper part extends over that edge to within a short distance of the outer wall of the pan. This is indicated by a dotted line in Fig. 2, and if this construction is adopted, only the upper thinner part of the table is removable from the upright shaft 2, while the lower thicker part of the table may be fixed to that shaft.

When a sound record is to be made, a record tablet of the kind described in my aforesaid Letters Patent, is placed upon the rotary table 4, and this record tablet is represented in the drawings as a circular disk 44, which has a central perforation passing over the upper end of the shaft 2. Sometimes it is convenient to interpose between the record tablet and the rotary supporting table a thin disk 45, of felt, or of some other non-resonant material. This, however, is not essential. Upon the record tablet is placed a clamping plate 46, which by preference is provided with a hub 47, which is slipped over the upper end of the shaft 2. This upper end of the shaft 2, is screw-threaded as shown, and a thumb-nut 48, is then screwed down upon the hub of the clamping plate, whereby the record tablet is securely fastened in position.

At one end of the base plate 1, there is mounted a standard 49, which may be a split tube as shown, and in which is supported by friction a stem 50, projecting from the bottom of a shelf 51, and which in turn supports a vessel 52, containing alcohol. From the bottom of this vessel extends a tube 53, preferably provided at its free end with a flexible nozzle 54; and a stop-cock 55, with which the tube is provided permits the operator to regulate the flow of alcohol from the nozzle. With my present improvement it is necessary that during the whole process of tracing the record, the record tablet be covered with a film of alcohol, and for this purpose a thin stream of alcohol is directed upon the center of the tablet, or rather upon the clamping plate 46, from which the alcohol spreads in all directions by centrifugal force, and flows over into the pan 6. When the tracing of the record has been completed, the clamping plate is removed and the record tablet also is lifted from its support by the insertion between the same of a sharp edge, such as a knife blade, or even by the finger nails of the operator, and is removed for further manipulation as described in my aforesaid Letters Patent, and also for the manipulation which will be described hereinafter.

Only a very small quantity of alcohol is used for producing a single record, but after continued use of the machine a considerable amount of alcohol accumulates in the pan, and this is removed by removing the table 4,

is poured out and preferably back into the vessel 52, by one of the pouring lips.

The recording diaphragm 56, is mounted in the circular frame 40, between a ledge formed on said frame and an annulus 57, screwed down upon the same by screws 58, as shown, or in any other suitable manner. On the rear side of that diaphragm there is applied a small block 59, of hard rubber from which extends radially an arm 60, which at its free end is turned up at right angles, outwardly and into contact with the lever 61, which carries the recording stylus 62.

The block 59, is fastened to the center of the diaphragm by a screw 63, passing through the diaphragm and through a washer 64, applied to the front side of the diaphragm. The head of this screw is faced with a disk 65, of soft rubber, and against the same bears the point of an adjusting screw 66, which is mounted in a perforated disk or spider 67, fixed in the neck 39.

The lever 61 is mounted on a plate 67′, formed with a slot 68, through which a set screw 69, fixed in the annulus 57, passes. The plate 67′, can thus be adjusted to various positions on the annulus, and is clamped in the adjusted position by a thumb-nut 70. One end of the plate 67′ is bifurcated, and screws 71, 71, passing through the legs of the fork, are formed at their ends with bearings for the pivot points of the arbor 72, which is fixed to the lever 61. This lever, is made as light as practicable and as is consistent with rigidity, and the plate 67′, together with the lever 61, which it carries, is so adjusted that the upturned end of the arm 60, bears upon the lever at the greatest practicable distance from the axis of the spindle 72, viz: at the free end of the lever. The connection between the lever and the upturned end of the arm 60 is made by a small quantity of pitch, 60′, which acts as an efficient cement, and which is applied after the lever has been adjusted to its proper position. This mode of connecting the lever with the arm 60, and thereby with the diaphragm, I have found to be of great advantage for a variety of reasons, but more especially on account of the ease with which the connection is made, and unmade in case of repair, and on account of the damping effect it has upon the lever.

To the end of the lever 61, is secured the recording stylus 62, by soldering or otherwise, with its plane at right angles to the plane of the lever, as shown. The stylus is composed of a flat, and rather thin plate of spring steel, pointed at its free end, and provided with a tracing point 62″, of iridium. The broad portion of the stylus is damped by one or two bands 72′, of soft rubber, which are simply slipped over the same.

By reference to Fig. 4, it will be seen that eccentrically mounted with reference to the center of the diaphragm; but notwithstanding this eccentric location, the lever is rigidly connected with the center of the diaphragm and thus receives the maximum amplitude of its vibration. By thus placing the lever with the stylus eccentric with reference to the center of the diaphragm both the lever and the stylus may be and are made shorter than if they were located on the line of a diameter of the diaphragm. This is an important result, since the shorter the lever and stylus, the less liability there is of lost motion, and the less liability there is of extra or spontaneous vibrations of the lever and stylus, and both of these facts conspire to produce an accurate tracing of the sound waves impinging against the diaphragm.

Where the stylus passes over the edge of casing 40, the latter, together with the annulus 57, is cut away upon a straight line, as indicated at 57′. This permits a further reduction of the length of the stylus, since the record tablet may be located close to the straight edge 57′.

The body of the stylus is normally curved downwardly, as shown in dotted lines at 62′, but when the diaphragm holder or frame 40, is turned to cause the stylus to impinge upon the record tablet, which is the preparatory step for making a record, the stylus is unbent and becomes straight, as shown in solid lines in Fig. 4, and I have found that the best results are obtained when the stylus is at an angle of about forty-five degrees with the plane of the tablet. The maximum pressure of the stylus upon the record surface is therefore equal to the force required to unbend the stylus. It is very small, because the stylus is made as thin as practicable, and it is uniform for different records and for all parts of the same record.

The mouth-piece, into which vocal sounds are uttered for recording, is shown at 43, in Figs. 1 and 8, and it consists of a bell shaped structure, the small end of which is secured to the sound conveying tube, while the wide, flaring end is turned toward the speaker who applies his mouth to the opening. Near the edge of the mouth opening there is a perforation 43′, cut into the wall of the mouth-piece, and this perforation is of such shape and size, and at such distance from the edge of the mouth-piece, as to fit approximately the edge of the nose of the speaker; so that when the mouth-piece is applied, the sounds uttered by the mouth enter the wide, flaring opening, while the sounds uttered by the nose enter the perforation 43′.

In making a record of vocal sounds, it is necessary that all sound waves composing the words or the song be conveyed to the dia-

along the upper surface 26, of one of the side pieces of the frame 22. The carriage 23, has firmly secured to it a projecting arm 27, on the outer end of which is an upright post 28, carrying at its upper end an arm 29, parallel with the arm 27, and of such length as to overhang the disk 4, when the carriage is moved to the right, as represented in the drawings; the construction being such, that when the carriage 23 is moved in the manner to be described, the arm 29, will be carried radially over the disk 4, and any object carried thereby will participate in said movement.

The carriage 23, is moved in one direction by means of the screw-threaded shaft 20, and in order to effect this operation, there is provided a block 30, in one side of which, near one end, is formed a half nut 31, constructed to engage the threads on the shaft 20; and this block 30, is pivotally supported between ears 32, erected on the carriage 23. Projecting from the other end of the block 30, there is a pin 33, to which one end of a spring 34, is attached, the other end of said spring being secured to the carriage 23, and the tendency of the spring is to maintain the block 30, in a tilted position with the nut portion raised out of engagement with the shaft 20. In order to lock the block 30, in engagement with the shaft 20 there is provided a leaf spring 35, mounted on the carriage 20, opposite the free end of the block 30, and having on its free end a tooth 36, which passes over the top of the hinged block 30, when the nut formed in the same is in engagement with the screw threads on the shaft 20, the tendency of the leaf spring 35, being to move inwardly toward the block 30. This catch spring 35, is also provided with a pin 37, which serves as a handle for withdrawing the catch so as to unlock the block 30, and thereby allow the carriage 23 with its appurtenances to be freely moved to any position upon the frame 22.

To the free overhanging arm 29, is secured a ring sleeve 38 which receives the neck 39, projecting on one side from the frame 40, in which latter the recording diaphragm and stylus are mounted, and this neck 39, with its appurtenances is fixed in any desired position in the ring frame 38, by a clamp screw 41. The free end of the neck 39, projects beyond the ring frame 38, and receives the sound conveying tube 42, which is preferably made flexible, and which has at its free end a mouth-piece 43, the particular construction of which will hereinafter be more fully described.

The disk 4, which is in the nature of a rotary table, has hereinbefore been described and is shown in the drawings as reduced in thickness on that portion of the periphery which overlaps the inner wall of the pan 6, and if this construction is used, the disk 4, must be removable from the shaft 2. It is, however, also practicable to make the disk or revolving table, in two parts, the lower part of which extending only to within a short distance of the upper edge of the inner wall 11, of the pan, while the upper part extends over that edge to within a short distance of the outer wall of the pan. This is indicated by a dotted line in Fig. 2, and if this construction is adopted, only the upper thinner part of the table is removable from the upright shaft 2, while the lower thicker part of the table may be fixed to that shaft.

When a sound record is to be made, a record tablet of the kind described in my aforesaid Letters Patent, is placed upon the rotary table 4, and this record tablet is represented in the drawings as a circular disk 44, which has a central perforation passing over the upper end of the shaft 2. Sometimes it is convenient to interpose between the record tablet and the rotary supporting table a thin disk 45, of felt, or of some other non-resonant material. This, however, is not essential. Upon the record tablet is placed a clamping plate 46, which by preference is provided with a hub 47, which is slipped over the upper end of the shaft 2. This upper end of the shaft 2, is screw-threaded as shown, and a thumb-nut 48, is then screwed down upon the hub of the clamping plate, whereby the record tablet is securely fastened in position.

At one end of the base plate 1, there is mounted a standard 49, which may be a split tube as shown, and in which is supported by friction a stem 50, projecting from the bottom of a shelf 51, and which in turn supports a vessel 52, containing alcohol. From the bottom of this vessel extends a tube 53, preferably provided at its free end with a flexible nozzle 54; and a stop-cock 55, with which the tube is provided permits the operator to regulate the flow of alcohol from the nozzle. With my present improvement it is necessary that during the whole process of tracing the record, the record tablet be covered with a film of alcohol, and for this purpose a thin stream of alcohol is directed upon the center of the tablet, or rather upon the clamping plate 46, from which the alcohol spreads in all directions by centrifugal force, and flows over into the pan 6. When the tracing of the record has been completed, the clamping plate is removed and the record tablet also is lifted from its support by the insertion between the same of a sharp edge, such as a knife blade, or even by the finger nails of the operator, and is removed for further manipulation as described in my aforesaid Letters Patent, and also for the manipulation which will be described hereinafter.

Only a very small quantity of alcohol is used for producing a single record, but after continued use of the machine a considerable amount of alcohol accumulates in the pan, and this is removed by removing the table 4, or the upper, thinner part thereof, as the case may be, by inserting a finger in each of the pouring lips 9, and thus lifting the disk or table 4, from the shaft 2. The pan is then removed from the bracket 7, and the alcohol

is poured out and preferably back into the vessel 52, by one of the pouring lips.

The recording diaphragm 56, is mounted in the circular frame 40, between a ledge formed on said frame and an annulus 57, screwed down upon the same by screws 58, as shown, or in any other suitable manner. On the rear side of that diaphragm there is applied a small block 59, of hard rubber from which extends radially an arm 60, which at its free end is turned up at right angles, outwardly and into contact with the lever 61, which carries the recording stylus 62.

The block 59, is fastened to the center of the diaphragm by a screw 63, passing through the diaphragm and through a washer 64, applied to the front side of the diaphragm. The head of this screw is faced with a disk 65, of soft rubber, and against the same bears the point of an adjusting screw 66, which is mounted in a perforated disk or spider 67, fixed in the neck 39.

The lever 61 is mounted on a plate 67', formed with a slot 68, through which a set screw 69, fixed in the annulus 57, passes. The plate 67', can thus be adjusted to various positions on the annulus, and is clamped in the adjusted position by a thumb-nut 70. One end of the plate 67' is bifurcated, and screws 71, 71, passing through the legs of the fork, are formed at their ends with bearings for the pivot points of the arbor 72, which is fixed to the lever 61. This lever, is made as light as practicable and as is consistent with rigidity, and the plate 67', together with the lever 61, which it carries, is so adjusted that the upturned end of the arm 60, bears upon the lever at the greatest practicable distance from the axis of the spindle 72, viz: at the free end of the lever. The connection between the lever and the upturned end of the arm 60 is made by a small quantity of pitch, 60', which acts as an efficient cement, and which is applied after the lever has been adjusted to its proper position. This mode of connecting the lever with the arm 60, and thereby with the diaphragm, I have found to be of great advantage for a variety of reasons, but more especially on account of the ease with which the connection is made, and unmade in case of repair, and on account of the damping effect it has upon the lever.

To the end of the lever 61, is secured the recording stylus 62, by soldering or otherwise, with its plane at right angles to the plane of the lever, as shown. The stylus is composed of a flat, and rather thin plate of spring steel, pointed at its free end, and provided with a tracing point 62'', of iridium. The broad portion of the stylus is damped by one or two bands 72', of soft rubber, which are simply slipped over the same.

By reference to Fig. 4, it will be seen that the lever 61, with the recording stylus 62 extend across the diaphragm upon a line which constitutes a chord but not a diameter of the circle of the diaphragm. They are, therefore, eccentrically mounted with reference to the center of the diaphragm; but notwithstanding this eccentric location, the lever is rigidly connected with the center of the diaphragm and thus receives the maximum amplitude of its vibration. By thus placing the lever with the stylus eccentric with reference to the center of the diaphragm both the lever and the stylus may be and are made shorter than if they were located on the line of a diameter of the diaphragm. This is an important result, since the shorter the lever and stylus, the less liability there is of lost motion, and the less liability there is of extra or spontaneous vibrations of the lever and stylus, and both of these facts conspire to produce an accurate tracing of the sound waves impinging against the diaphragm.

Where the stylus passes over the edge of casing 40, the latter, together with the annulus 57, is cut away upon a straight line, as indicated at 57'. This permits a further reduction of the length of the stylus, since the record tablet may be located close to the straight edge 57'.

The body of the stylus is normally curved downwardly, as shown in dotted lines at 62', but when the diaphragm holder or frame 40, is turned to cause the stylus to impinge upon the record tablet, which is the preparatory step for making a record, the stylus is unbent and becomes straight, as shown in solid lines in Fig. 4, and I have found that the best results are obtained when the stylus is at an angle of about forty-five degrees with the plane of the tablet. The maximum pressure of the stylus upon the record surface is therefore equal to the force required to unbend the stylus. It is very small, because the stylus is made as thin as practicable, and it is uniform for different records and for all parts of the same record.

The mouth-piece, into which vocal sounds are uttered for recording, is shown at 43, in Figs. 1 and 8, and it consists of a bell shaped structure, the small end of which is secured to the sound conveying tube, while the wide, flaring end is turned toward the speaker who applies his mouth to the opening. Near the edge of the mouth opening there is a perforation 43', cut into the wall of the mouth-piece, and this perforation is of such shape and size, and at such distance from the edge of the mouth-piece, as to fit approximately the edge of the nose of the speaker; so that when the mouth-piece is applied, the sounds uttered by the mouth enter the wide, flaring opening, while the sounds uttered by the nose enter the perforation 43'.

In making a record of vocal sounds, it is necessary that all sound waves composing the words or the song be conveyed to the diaphragm, and it has, therefore, been proposed to make mouth-pieces of such size and shape as to admit within the opening both the mouth and the nose of the speaker or singer, and to fit against the face of the user around the

mouth and nose. Mouth pieces of this character are necessarily large and clumsy, and do not readily and comfortably fit different persons, while with my construction the size of the mouth-piece is reduced, and will comfortably fit different speakers.

By means of the apparatus so far described, a record of sound waves is made in the following manner: The spring catch 35, 36, is drawn back, which permits the spring 34, to lift the block 30, from the screw 20, so that the carriage 23, may be freely moved to the left, whereby the stylus 62, is carried beyond the edge of the rotary table 4. A record tablet prepared in the manner described in my aforesaid Letters Patent is then placed upon the table 4, and clamped to the same, as hereinbefore described, and the carriage 23, is moved toward the right until the point of the recording stylus is above the tablet but within the edge of the same. The casing 40, is then turned in its bearing 38, until the point of the stylus impinges upon the tablet and is unbent, as shown in Fig. 4. In this position the casing 40, is clamped by means of the screw 41. The stop-cock 55, is then opened and a thin stream of alcohol is directed upon the clamping disk 46. The wheel 17, is now rotated by means of the crank and handle 16, whereby, by means of the gearing described, the record tablet is rotated, while the stylus is carried across the face of the tablet in a radial line, removing from the tablet a fine spiral line of the fatty etching ground with which it had been covered. Sound waves are now directed against the diaphragm in any desired manner, and if vocal sounds are to be recorded, the sound conveying tube 42, with the mouth piece 43, will be used. The vibrations of the diaphragm thus produced will cause the stylus to make a tracing of an undulatory line, corresponding to the sound waves directed against the diaphragm; all as described in my aforesaid Letters Patent. During this whole time a thin stream of alcohol is delivered upon the plate 46, and the alcohol spreading out in all directions is maintained as a uniform and constantly renewed film upon the tablet. In this manner every part of the record is made under alcohol, and in this respect my present invention differs from the process set forth in my aforesaid Letters Patent.

In accordance with the said patent, alcohol is poured once for all over the tablet, and is allowed to evaporate during the process of recording. I have found that in this manner it often happens that the alcohol has entirely evaporated before the record is completed, so that a portion of the latter is made upon a dry tablet; whereby the accumulation of filamentary particles of dust on the point of the stylus, which the alcohol is designed to avoid,

After the tracing of the record has been completed, the tablet is speedily removed and before the record is fixed by etching as described in my aforesaid patent, the alcohol adhering to the record surface is quickly washed off with water. This is an important step in my improved process and greatly improves the definition of the record by etching. The reason for this is, that the alcohol slightly attacks and dissolves the fatty etching ground, so that the thin film of alcohol remaining upon the tablet, contains a slight quantity of that ground in solution. If now, the film of alcohol is allowed to evaporate an exceedingly small quantity of the dissolved ground is deposited upon the metal which has been laid bare by the stylus. This small deposit of ground sufficiently resists the action of the etching fluid to impair the definition of the final record. By simply pouring water over the record surface immediately after the tablet has been removed from the recording apparatus the film of alcohol and the ground held in solution by the same is removed, and the tracings of the stylus present a clean metallic surface, which is properly attacked by the etching fluid.

The reproducing apparatus as a whole is represented in Fig. 3.

Upon a base board 73, in standards 74, is journaled a shaft 75, upon which are mounted a driven pulley 76, a fly-wheel 77, and a friction disk 78. The latter is in frictional engagement with a rotary table 79, which is mounted upon a vertical shaft substantially in the manner described with reference to the rotary table 4, of the recording apparatus. Fig. 3, being a perspective view, the mounting of the table 79, is not visible, but is easily understood from the foregoing description. The upper surface of the table is preferably covered with a sheet of felt or other elastic and non-resonant material, as indicated by appropriate shading.

Upon the felt covered table 79, the record tablet 44, is placed and is clamped thereon substantially in the manner in which this is done in the transmitting apparatus, *i. e.*, by means of a clamping plate 46, and a thumb-nut 48. A driving wheel 80, mounted on a shaft 81, which is journaled in standards 82, is rotated by means of a crank 83, and handle 84, and gives motion to the table 79, by means of a crossed belt or cord 85. The relation of the table 79, to the friction disk 78, is the same as the relation of the table 4, to the friction disk 12; that is to say, the table rests with the greater part of its weight upon the friction disk, so that the frictional gearing is automatically maintained. A post 86, mounted upon the base-board 73, has swiveled upon its upper end a fork 87, between the prongs

its diaphragm, stylus and appurtenances, which will presently be described, can be thus turned in the clasp, and can be fixed in any adjusted position by a clamp screw 93.

Upon the end of the neck 90, which projects beyond the clasp 89, is slipped a flexible tube 94, which in turn receives the small end of a sound conveying trumpet 95, the flaring end 96 of which is turned toward the listener. A bracket 97, secured to the swinging arm 88, carries at its free end an elastic fork 98, which receives and supports the trumpet, and the parts are so proportioned that the free end of the swinging arm preponderates, so that the point of the reproducing stylus, which will presently be described, presses rather firmly upon the record tablet.

It will now be understood, that when a record tablet, having a record of sound waves upon its surface, produced in accordance with my invention, is mounted upon the table 79, and when the point of the stylus is adjusted in engagement with the record groove, and the wheel 80, is rotated, the rotating record groove will guide the stylus across the face of the tablet, and will at the same time vibrate the stylus and diaphragm in accordance with the undulations of the record groove. The sound waves thus produced by the diaphragm will issue from the flaring opening of the trumpet, and the sounds will be heard by a listener in front of the trumpet, or in its vicinity.

The reproducing diaphragm is mounted in the casing 91, in the usual manner, being held against a ledge by means of an annulus 99. On this annulus is formed a swelling or block 100, and diametrically opposite to the same the stylus carrying spring 101, is fastened to the annulus, and extends across the face of the diaphragm and beyond the edge of the annulus. This spring 101, is a leaf spring which faces with its flat side the face of the diaphragm up to a point beyond the center of the latter, and is then twisted at right angles, as indicated at 102, and crosses the annulus edgewise as shown at 103. The tendency of the part 101, of the spring is to press toward the diaphragm, whereby the edge of the part 103, is made to bear with some force upon the annulus 99; and the tendency of the part 103, is to press against the swelling or block 100. The spring is therefore elastic in two directions at right angles to each other.

In order to prevent grinding of the spring against the annulus and against the block 100, a U-shaped piece 104, of soft rubber embraces the outer portion 103, where it bears upon the annulus and against the block. This soft rubber cushion also serves as a dampener for the spring. At the point where the spring passes over the center of the diaphragm, it has a perforation 105, and a screw and nut 110 between the thumb-nut and the spring serve to regulate the tension of the latter and of the diaphragm, as will be readily understood.

On the free end of the spring 101, 103, there is secured a binding post 111, in which the stylus 112, is held by the set screw 113, and may be adjusted to project to the required distance beyond the end of the spring. This stylus is preferably made of hard steel. It has a slender point, but the point should not be so sharp as to cut the bottom of the record groove which it engages.

In the operation of reproducing the sounds recorded on a tablet, the stylus is guided by the walls of the record groove, and not by the bottom of the same. Consequently it is not essential that the point of the stylus be in contact with the bottom of the groove. In fact it is preferably not in contact with the same, so that this point may be made rather dull.

The sounds emitted by the reproducing diaphragm are very powerful and ordinarily too loud to be received with comfort by a listener in front of the trumpet or other receiving tube. For this reason I have found it sometimes necessary to reduce the volume of the emitted sound before it reaches the ear, and this I accomplish by one or more perforated and exchangeable diaphragms 114, placed in the neck 90. These diaphragms should be made of some non-resonant material like soft rubber, or cork, as indicated by appropriate shading.

Having now fully described my invention, I claim and desire to secure by Letters Patent—

1. The method of recording vocal and other sounds which consists in removing from a record tablet covered with a fatty film, undulatory lines of said film by, and in accordance with the sound waves and maintaining at the same time a layer of a fluid over the film, substantially as described.

2. The method of recording vocal and other sounds upon a rotating disk covered with a fatty film which consists in spreading over said film and continuously renewing over the same a layer of a fluid and at the same time removing from said tablet undulatory lines of the fatty film by and in accordance with the sound waves, substantially as described.

3. The improvement in the art of making a gramophone record which consists in immersing and maintaining the tablet and the point of the recording stylus in alcohol during the process of recording, substantially as described.

4. The improvement in the art of making and fixing a gramophone record which consists in removing from a tablet coated with

mouth and nose. Mouth pieces of this character are necessarily large and clumsy, and do not readily and comfortably fit different persons, while with my construction the size of the mouth-piece is reduced, and will comfortably fit different speakers.

By means of the apparatus so far described, a record of sound waves is made in the following manner: The spring catch 35, 36, is drawn back, which permits the spring 34, to lift the block 30, from the screw 20, so that the carriage 23, may be freely moved to the left, whereby the stylus 62, is carried beyond the edge of the rotary table 4. A record tablet prepared in the manner described in my aforesaid Letters Patent is then placed upon the table 4, and clamped to the same, as hereinbefore described, and the carriage 23, is moved toward the right until the point of the recording stylus is above the tablet but within the edge of the same. The casing 40, is then turned in its bearing 38, until the point of the stylus impinges upon the tablet and is unbent, as shown in Fig. 4. In this position the casing 40, is clamped by means of the screw 41. The stop-cock 55, is then opened and a thin stream of alcohol is directed upon the clamping disk 46. The wheel 17, is now rotated by means of the crank and handle 16, whereby, by means of the gearing described, the record tablet is rotated, while the stylus is carried across the face of the tablet in a radial line, removing from the tablet a fine spiral line of the fatty etching ground with which it had been covered. Sound waves are now directed against the diaphragm in any desired manner, and if vocal sounds are to be recorded, the sound conveying tube 42, with the mouth piece 43, will be used. The vibrations of the diaphragm thus produced will cause the stylus to make a tracing of an undulatory line, corresponding to the sound waves directed against the diaphragm; all as described in my aforesaid Letters Patent. During this whole time a thin stream of alcohol is delivered upon the plate 46, and the alcohol spreading out in all directions is maintained as a uniform and constantly renewed film upon the tablet. In this manner every part of the record is made under alcohol, and in this respect my present invention differs from the process set forth in my aforesaid Letters Patent.

In accordance with the said patent, alcohol is poured once for all over the tablet, and is allowed to evaporate during the process of recording. I have found that in this manner it often happens that the alcohol has entirely evaporated before the record is completed, so that a portion of the latter is made upon a dry tablet; whereby the accumulation of filamentary particles of dust on the point of the stylus, which the alcohol is designed to avoid, takes place during the production of a portion of the record. With my present improvement this defect is cured, since it maintains the record tablet moist with alcohol from the beginning to the end of the operation.

After the tracing of the record has been completed, the tablet is speedily removed and before the record is fixed by etching as described in my aforesaid patent, the alcohol adhering to the record surface is quickly washed off with water. This is an important step in my improved process and greatly improves the definition of the record by etching. The reason for this is, that the alcohol slightly attacks and dissolves the fatty etching ground, so that the thin film of alcohol remaining upon the tablet, contains a slight quantity of that ground in solution. If now, the film of alcohol is allowed to evaporate an exceedingly small quantity of the dissolved ground is deposited upon the metal which has been laid bare by the stylus. This small deposit of ground sufficiently resists the action of the etching fluid to impair the definition of the final record. By simply pouring water over the record surface immediately after the tablet has been removed from the recording apparatus the film of alcohol and the ground held in solution by the same is removed, and the tracings of the stylus present a clean metallic surface, which is properly attacked by the etching fluid.

The reproducing apparatus as a whole is represented in Fig. 3.

Upon a base board 73, in standards 74, is journaled a shaft 75, upon which are mounted a driven pulley 76, a fly-wheel 77, and a friction disk 78. The latter is in frictional engagement with a rotary table 79, which is mounted upon a vertical shaft substantially in the manner described with reference to the rotary table 4, of the recording apparatus. Fig. 3, being a perspective view, the mounting of the table 79, is not visible, but is easily understood from the foregoing description. The upper surface of the table is preferably covered with a sheet of felt or other elastic and non-resonant material, as indicated by appropriate shading.

Upon the felt covered table 79, the record tablet 44, is placed and is clamped thereon substantially in the manner in which this is done in the transmitting apparatus, *i. e.*, by means of a clamping plate 46, and a thumb-nut 48. A driving wheel 80, mounted on a shaft 81, which is journaled in standards 82, is rotated by means of a crank 83, and handle 84, and gives motion to the table 79, by means of a crossed belt or cord 85. The relation of the table 79, to the friction disk 78, is the same as the relation of the table 4, to the friction disk 12; that is to say, the table rests with the greater part of its weight upon the friction disk, so that the frictional gearing is automatically maintained. A post 86, mounted upon the base-board 73, has swiveled upon its upper end a fork 87, between the prongs of which is pivoted the swinging arm 88, which extends over the table 79, and has at its free end a clasp 89, which receives the neck 90, which projects from the center on one side of the casing 91, of the reproducing

its diaphragm, stylus and appurtenances, which will presently be described, can be thus turned in the clasp, and can be fixed in any adjusted position by a clamp screw 93.

Upon the end of the neck 90, which projects beyond the clasp 89, is slipped a flexible tube 94, which in turn receives the small end of a sound conveying trumpet 95, the flaring end 96 of which is turned toward the listener. A bracket 97, secured to the swinging arm 88, carries at its free end an elastic fork 98, which receives and supports the trumpet, and the parts are so proportioned that the free end of the swinging arm preponderates, so that the point of the reproducing stylus, which will presently be described, presses rather firmly upon the record tablet.

It will now be understood, that when a record tablet, having a record of sound waves upon its surface, produced in accordance with my invention, is mounted upon the table 79, and when the point of the stylus is adjusted in engagement with the record groove, and the wheel 80, is rotated, the rotating record groove will guide the stylus across the face of the tablet, and will at the same time vibrate the stylus and diaphragm in accordance with the undulations of the record groove. The sound waves thus produced by the diaphragm will issue from the flaring opening of the trumpet, and the sounds will be heard by a listener in front of the trumpet, or in its vicinity.

The reproducing diaphragm is mounted in the casing 91, in the usual manner, being held against a ledge by means of an annulus 99. On this annulus is formed a swelling or block 100, and diametrically opposite to the same the stylus carrying spring 101, is fastened to the annulus, and extends across the face of the diaphragm and beyond the edge of the annulus. This spring 101, is a leaf spring which faces with its flat side the face of the diaphragm up to a point beyond the center of the latter, and is then twisted at right angles, as indicated at 102, and crosses the annulus edgewise as shown at 103. The tendency of the part 101, of the spring is to press toward the diaphragm, whereby the edge of the part 103, is made to bear with some force upon the annulus 99; and the tendency of the part 103, is to press against the swelling or block 100. The spring is therefore elastic in two directions at right angles to each other.

In order to prevent grinding of the spring against the annulus and against the block 100, a U-shaped piece 104, of soft rubber embraces the outer portion 103, where it bears upon the annulus and against the block. This soft rubber cushion also serves as a dampener for the spring. At the point where the spring passes over the center of the diaphragm, it has a perforation 105, and a screw pin 106, secured to the center of the diaphragm by two nuts 107, 108, extends loosely through the perforation. A thumb-nut 109, also placed on the screw-pin 108, and a soft rubber washer 110 between the thumb-nut and the spring serve to regulate the tension of the latter and of the diaphragm, as will be readily understood.

On the free end of the spring 101, 103, there is secured a binding post 111, in which the stylus 112, is held by the set screw 113, and may be adjusted to project to the required distance beyond the end of the spring. This stylus is preferably made of hard steel. It has a slender point, but the point should not be so sharp as to cut the bottom of the record groove which it engages.

In the operation of reproducing the sounds recorded on a tablet, the stylus is guided by the walls of the record groove, and not by the bottom of the same. Consequently it is not essential that the point of the stylus be in contact with the bottom of the groove. In fact it is preferably not in contact with the same, so that this point may be made rather dull.

The sounds emitted by the reproducing diaphragm are very powerful and ordinarily too loud to be received with comfort by a listener in front of the trumpet or other receiving tube. For this reason I have found it sometimes necessary to reduce the volume of the emitted sound before it reaches the ear, and this I accomplish by one or more perforated and exchangeable diaphragms 114, placed in the neck 90. These diaphragms should be made of some non-resonant material like soft rubber, or cork, as indicated by appropriate shading.

Having now fully described my invention, I claim and desire to secure by Letters Patent—

1. The method of recording vocal and other sounds which consists in removing from a record tablet covered with a fatty film, undulatory lines of said film by, and in accordance with the sound waves and maintaining at the same time a layer of a fluid over the film, substantially as described.

2. The method of recording vocal and other sounds upon a rotating disk covered with a fatty film which consists in spreading over said film and continuously renewing over the same a layer of a fluid and at the same time removing from said tablet undulatory lines of the fatty film by and in accordance with the sound waves, substantially as described.

3. The improvement in the art of making a gramophone record which consists in immersing and maintaining the tablet and the point of the recording stylus in alcohol during the process of recording, substantially as described.

4. The improvement in the art of making and fixing a gramophone record which consists in removing from a tablet covered with a fatty film undulatory lines of said film by and in accordance with sound waves while said film is covered with a layer of alcohol; then immediately removing the alcohol with water and then subjecting the tablet to the

action of an etching fluid, substantially as described.

5. The method of reproducing sounds from a record of the same which consists in vibrating a stylus and propelling the same along the record by and in accordance with the said record, substantially as described.

6. In a gramophone, a recording stylus pressing by its own elasticity upon the record tablet at right angles to the plane of its vibratory movements and consisting of a leaf spring terminating in a point of harder material than that of the body of the stylus, substantially as described.

7. In a gramophone, the combination of a sound receiving diaphragm and an elastic recording stylus controlled by the diaphragm and adjustable with reference to a record tablet so as to press by its own elasticity upon the same at right angles to the plane of its vibratory movements, substantially as described.

8. In a gramophone a recording stylus pressing by its own elasticity upon the record tablet at right angles to its plane of vibratory movements, and consisting of a leaf spring terminating in an iridium point, substantially as described.

9. In a gramophone, a recording stylus composed of a leaf spring terminating in a tracing point in combination with one or more elastic non-sonorous dampers, substantially as described.

10. In a gramophone a recording stylus formed of a leaf spring terminating in a tracing point in combination with one or more sleeves of soft rubber upon the leaf spring for damping the same, substantially as described.

11. In a gramophone, the combination of a sound receiving diaphragm, a lever and a recording stylus carried by the same, both extending parallel but eccentrically over the diaphragm; with a connection between the center of the diaphragm and the lever, substantially as described.

12. In a gramophone, the combination of a sound receiving diaphragm a lever and a recording stylus carried by the same, both extending over the face of the diaphragm but eccentrically thereto, with a rigid connection between the center of the diaphragm and the free end of the lever, substantially as described.

13. In a gramophone, the combination of a circular sound receiving diaphragm, a lever and an elastic recording stylus both extending parallel with the diaphragm on the line of a chord, with a rigid connection between the center of the diaphragm and the free end of the lever, substantially as described.

14. In a gramophone, the combination of a sound receiving diaphragm, a lever and an elastic stylus carried by the same, both extended to the lever, substantially as described.

15. In a gramophone, the combination of a sound receiving diaphragm mounted in a suitable frame, a bracket adjustably mounted on said frame, a lever pivoted in said frame extending parallel to and eccentrically with reference to the center of the diaphragm, and an elastic recording stylus carried by the lever; with a mechanical connection between the center of the diaphragm and the free end of the lever, substantially as described.

16. In a gramophone a sound receiving diaphragm and a tube for conveying sound waves thereto in combination with a recording stylus receiving motion from the diaphragm, and a screw mounted in the sound conveying tube bearing centrally upon the diaphragm for adjusting the tension of the latter, substantially as described.

17. In a gramophone, the combination of a horizontal rotary table adapted to support a record tablet, and a vertical shaft free to move longitudinally, carrying the table; with a friction disk engaged by the under side of the table for rotating the latter, substantially as described.

18. In a gramophone the combination of a horizontal rotary table mounted upon a vertical shaft and adapted to support a record tablet; with a friction disk engaging the under side of the table and partly sustaining the weight of the table, whereby the latter is automatically maintained in frictional gear with said disk, substantially as described.

19. In a gramophone, the combination of a rotary horizontal table adapted to receive and support a flat record tablet; with a reservoir of a suitable fluid, such as alcohol, discharging upon the center of the table and tablet, and an annular pan disposed underneath the table for receiving the overflow of alcohol, substantially as described.

20. In a gramophone the combination of a horizontal rotatable table adapted to receive and support a record tablet; with a reservoir of alcohol discharging upon the center of the table and tablet, an annular pan disposed under the edge of the table for receiving the overflow of alcohol, and a friction disk bearing upon the under side of the table between the center of the same and the inner wall of the pan, substantially as described.

21. In a gramophone, the combination of a horizontal rotary table adapted to receive and support a record tablet, a recording diaphragm and stylus connected by gearing with the table to move radially over and with the stylus in operative relation to the same, substantially as described.

22. In a gramophone, the combination of a horizontal rotating table adapted to receive and sustain a flat record tablet, with a carriage movable in a line parallel to a radius of

gearing connecting the table with said carriage, substantially as described.

23. In a gramophone, a sound conveying tube provided with a mouth piece having a flaring opening for the application of the mouth of the speaker and a perforation in the side wall of the mouth piece separated from and spaced with reference to the mouth opening and shaped to correspond to the shape of the nostrils of the speaker, substantially as described.

24. In a gramophone a sound reproducing diaphragm in combination with a stylus lever extending diametrically across the same, and elastic in two directions at right angles to each other, substantially as described.

25. In a gramophone, the combination of a diaphragm and a stylus carrier composed of a leaf spring twisted at one point so as to bring the edge of one portion at right angles to the face of the other portion, whereby it is elastic in two directions, substantially as described.

26. In a gramophone the combination of a reproducing diaphragm and stylus; with a stylus carrier composed of a leaf spring extending flat-wise over the face of the diaphragm and edgewise over the edge of the diaphragm, substantially as described.

27. In a gramophone the combination of a reproducing diaphragm mounted in a suitable frame the latter being provided at one point with a boss or stop; with a double elastic stylus carrier composed of a twisted leaf-spring tending toward the diaphragm and against the boss or stop, substantially as described.

28. In a gramophone, a reproducing diaphragm and stylus in combination with an elastic stylus carrier extending over the face of the diaphragm and tending toward the same, of an adjustable connection between the diaphragm and stylus carrier and adjustable for varying the pressure between diaphragm and style carrier, substantially as described.

29. In a gramophone the combination of a reproducing diaphragm mounted in a suitable frame provided with a boss or stop; with a double elastic stylus carrier tending toward the diaphragm and toward the stop, and elastic non-resonant dampers interposed between the style carrier and the diaphragm and between the style carrier and the frame and stop, substantially as described.

30. In a gramophone a sound reproducing diaphragm and a sound conveying tube for the same, with one or more non-resonant perforated diaphragms in the said tube for reducing the volume of sound conveyed to the ear substantially as described.

31. In a gramophone a recording stylus pivoted to move in response to the vibrations of a diaphragm and elastic in a plane at right angles to such motions, substantially as described.

32. In a gramophone, a reproducing stylus having a wedge-shaped point engaging the walls of the record groove, substantially as described.

33. In a gramophone reproducer, a stylus carried or formed by a spring fixed at one end to the diaphragm holder and freely extending across and beyond the same and operatively connected with the center of the diaphragm, substantially as described.

34. In a gramophone reproducer, a spring constituting or carrying a stylus, fixed at one end to the diaphragm holder and extending across and beyond the periphery of the same and freely pressing against the diaphragm, substantially as described.

35. In a sound reproducing apparatus consisting of a traveling tablet having a sound record formed thereon and a reproducing stylus shaped for engagement with said record and free to be vibrated and propelled by the same, substantially as described.

In testimony whereof I have signed my name to this specification in the presence of two subscribing witnesses.

EMILE BERLINER.

Witnesses:

HENRY E. COOPER,

F. T. CHAPMAN.

action of an etching fluid, substantially as described.

6. The method of reproducing sounds from a record of the same which consists in vibrating a stylus and propelling the same along the record by and in accordance with the said record, substantially as described.

8. In a gramophone, a recording stylus pressing by its own elasticity upon the record tablet at right angles to the plane of its vibratory movements and consisting of a leaf spring terminating in a point of harder material than that of the body of the stylus, substantially as described.

7. In a gramophone, the combination of a sound receiving diaphragm and an elastic recording stylus controlled by the diaphragm and adjustable with reference to a record tablet so as to press by its own elasticity upon the same at right angles to the plane of its vibratory movements, substantially as described.

8. In a gramophone a recording stylus pressing by its own elasticity upon the record tablet at right angles to its plane of vibratory movements, and consisting of a leaf spring terminating in an iridium point, substantially as described.

9. In a gramophone, a recording stylus composed of a leaf spring terminating in a tracing point in combination with one or more elastic non-sonorous dampers, substantially as described.

10. In a gramophone a recording stylus formed of a leaf spring terminating in a tracing point in combination with one or more sleeves of soft rubber upon the leaf spring for damping the same, substantially as described.

11. In a gramophone, the combination of a sound receiving diaphragm, a lever and a recording stylus carried by the same, both extending parallel but eccentrically over the diaphragm; with a connection between the center of the diaphragm and the lever, substantially as described.

12. In a gramophone, the combination of a sound receiving diaphragm a lever and a recording stylus carried by the same, both extending over the face of the diaphragm but eccentrically thereto, with a rigid connection between the center of the diaphragm and the free end of the lever, substantially as described.

13. In a gramophone, the combination of a circular sound receiving diaphragm, a lever and an elastic recording stylus both extending parallel with the diaphragm on the line of a chord, with a rigid connection between the center of the diaphragm and the free end of the lever, substantially as described.

14. In a gramophone, the combination of a sound receiving diaphragm, a lever and an elastic stylus carried by the same, both extending parallel, but eccentrically thereto; with a bracket rigidly connected with the center of the diaphragm and removably cemented to the lever, substantially as described.

15. In a gramophone, the combination of a sound receiving diaphragm mounted in a suitable frame, a bracket adjustably mounted on said frame, a lever pivoted in said frame extending parallel to and eccentrically with reference to the center of the diaphragm, and an elastic recording stylus carried by the lever; with a mechanical connection between the center of the diaphragm and the free end of the lever, substantially as described.

16. In a gramophone a sound receiving diaphragm and a tube for conveying sound waves thereto in combination with a recording stylus receiving motion from the diaphragm, and a screw mounted in the sound conveying tube bearing centrally upon the diaphragm for adjusting the tension of the latter, substantially as described.

17. In a gramophone, the combination of a horizontal rotary table adapted to support a record tablet, and a vertical shaft free to move longitudinally, carrying the table; with a friction disk engaged by the under side of the table for rotating the latter, substantially as described.

18. In a gramophone the combination of a horizontal rotary table mounted upon a vertical shaft and adapted to support a record tablet; with a friction disk engaging the under side of the table and partly sustaining the weight of the table, whereby the latter is automatically maintained in frictional gear with said disk, substantially as described.

19. In a gramophone, the combination of a rotary horizontal table adapted to receive and support a flat record tablet; with a reservoir of a suitable fluid, such as alcohol, discharging upon the center of the table and tablet, and an annular pan disposed underneath the table for receiving the overflow of alcohol, substantially as described.

20. In a gramophone the combination of a horizontal rotatable table adapted to receive and support a record tablet; with a reservoir of alcohol discharging upon the center of the table and tablet, an annular pan disposed under the edge of the table for receiving the overflow of alcohol, and a friction disk bearing upon the under side of the table between the center of the same and the inner wall of the pan, substantially as described.

21. In a gramophone, the combination of a horizontal rotary table adapted to receive and support a record tablet, a recording diaphragm and stylus connected by gearing with the table to move radially over and with the stylus in operative relation to the same, substantially as described.

22. In a gramophone, the combination of a horizontal rotating table adapted to receive and sustain a flat record tablet, with a carriage movable in a line parallel to a radius of the table, a recording diaphragm and stylus carried by the carriage with the stylus in operative contact with the record tablet, and

gearing connecting the table with said carriage, substantially as described.

23. In a gramophone, a sound conveying tube provided with a mouth piece having a flaring opening for the application of the mouth of the speaker and a perforation in the side wall of the mouth piece separated from and spaced with reference to the mouth opening and shaped to correspond to the shape of the nostrils of the speaker, substantially as described.

24. In a gramophone a sound reproducing diaphragm in combination with a stylus lever extending diametrically across the same, and elastic in two directions at right angles to each other, substantially as described.

25. In a gramophone, the combination of a diaphragm and a stylus carrier composed of a leaf spring twisted at one point so as to bring the edge of one portion at right angles to the face of the other portion, whereby it is elastic in two directions, substantially as described.

26. In a gramophone the combination of a reproducing diaphragm and stylus; with a stylus carrier composed of a leaf spring extending flat-wise over the face of the diaphragm and edgewise over the edge of the diaphragm, substantially as described.

27. In a gramophone the combination of a reproducing diaphragm mounted in a suitable frame the latter being provided at one point with a boss or stop; with a double elastic stylus carrier composed of a twisted leaf-spring tending toward the diaphragm and against the boss or stop, substantially as described.

28. In a gramophone, a reproducing diaphragm and stylus in combination with an elastic stylus carrier extending over the face of the diaphragm and tending toward the same, of an adjustable connection between the diaphragm and stylus carrier and adjustable for varying the pressure between diaphragm and style carrier, substantially as described.

29. In a gramophone the combination of a reproducing diaphragm mounted in a suitable frame provided with a boss or stop; with a double elastic stylus carrier tending toward the diaphragm and toward the stop, and elastic non-resonant dampers interposed between the style carrier and the diaphragm and between the style carrier and the frame and stop, substantially as described.

30. In a gramophone a sound reprodncing diaphragm and a sonnd conveying tube for the same, with one or more non-resonant perforated diaphragms in the said tube for reducing the volume of sound conveyed to the ear substantially as described.

31. In a gramophone a recording stylus pivoted to move in response to the vibrations of a diaphragm and elastic in a plane at right angles to such motions, substantially as described.

32. In a gramophone, a reproducing stylus having a wedge-shaped point engaging the walls of the record groove, substantially as described.

33. In a gramophone reproducer, a stylus carried or formed by a spring fixed at one end to the diaphragm holder and freely extending across and beyond the same and operatively connected with the center of the diaphragm, substantially as described.

34. In a gramophone reproducer, a spring constituting or carrying a stylus, fixed at one end to the diaphragm holder and extending across and beyond the periphery of the same and freely pressing against the diaphragm, substantially as described.

35. In a sound reproducing apparatus consisting of a traveling tablet having a sound record formed thereon and a reproducing stylus shaped for engagement with said record and free to be vibrated and propelled by the same, substantially as described.

In testimony whereof I have signed my name to this specification in the presence of two subscribing witnesses.

EMILE BERLINER.

Witnesses:

HENRY E. COOPER,

F. T. CHAPMAN.

882

(No Model.)

W. H. COOLEY.

ART OF RECORDING AND REPRODUCING IMPULSES.

No. 551,946. Patented Dec. 24, 1895.

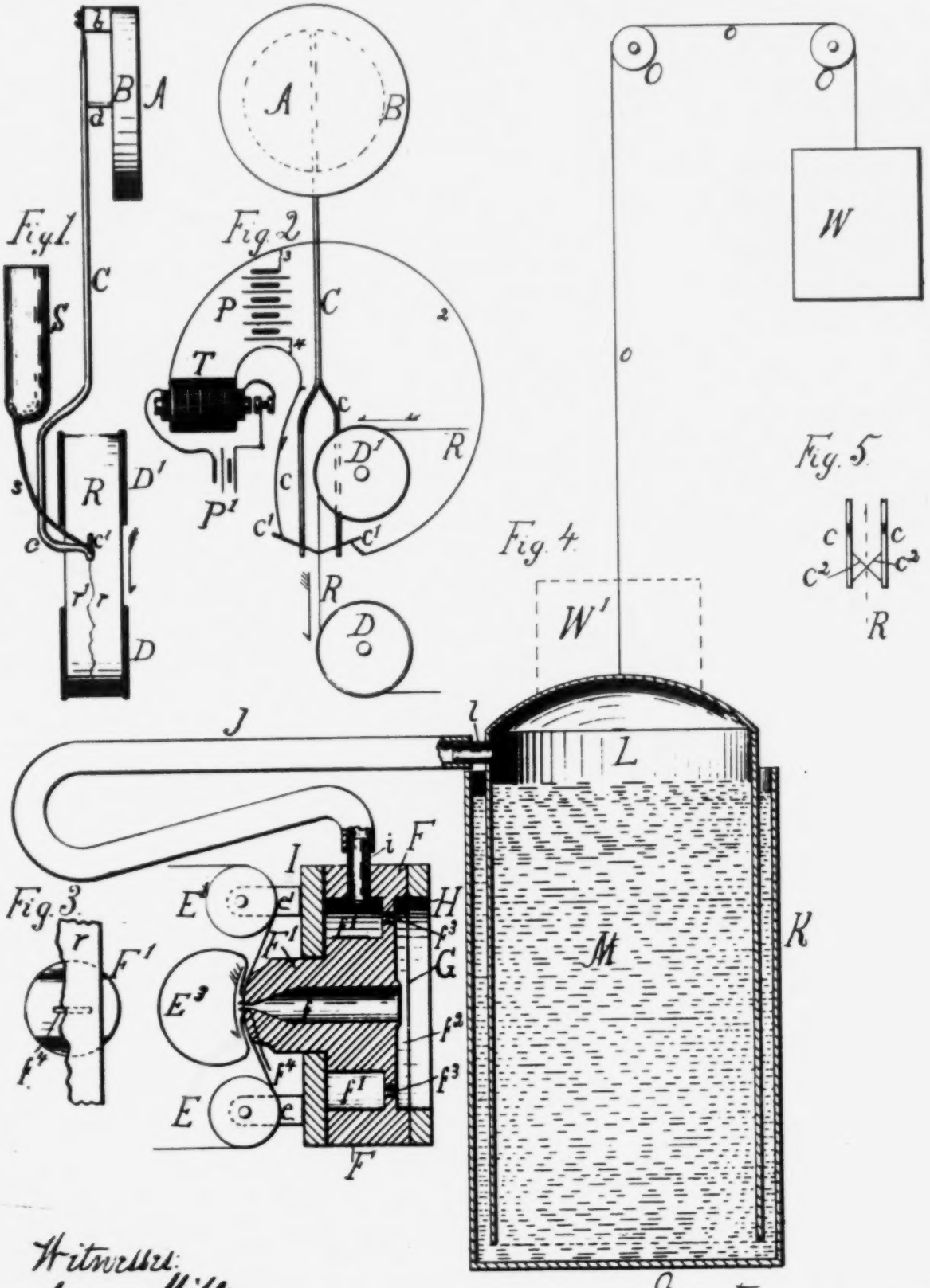

Witnesses:

Inventor

UNITED STATES PATENT OFFICE.

WILLIAM H. COOLEY, OF BROCKPORT, NEW YORK.

ART OF RECORDING AND REPRODUCING IMPULSES.

SPECIFICATION forming part of Letters Patent No. 551,946, dated December 24, 1895.

Application filed April 16, 1889. Serial No. 307,507. (No model.)

To all whom it may concern:

Be it known that I, WILLIAM H. COOLEY, a citizen of the United States, residing at Brockport, in the county of Monroe and State of New York, have invented certain new and useful Improvements in the Art of Recording and Reproducing Impulses, of which the following is a specification.

The object of my invention is the recording of impulses capable of actuating a diaphragm and recording-stylus, or equivalent device, in such a manner that such impulses may, at any desired place and time or number of times, be reproduced from such record.

The essential feature of my record consists in changing the form of the substance upon which such record is written in such a manner that such substance shall present a contour varying exactly according with such original impulses. In reproducing such original impulses I cause such record to more or less nearly close an orifice through which a suitable fluid is allowed to pass under pressure in such a manner as to create varying pressures upon a diaphragm or other equivalent device, which is thus caused to vibrate in a manner to reproduce such original impulses. Such a record may more or less nearly close such an orifice through the medium of a stylus or lever or small rod actuating a valve located in such orifice, and caused to vibrate by the varying contour of such record, when moved before and in contact with such stylus or lever or rod; but it is preferred, when practicable, that such record should of itself, by being passed over or before such orifice, vary, according to the contour of such record, the amount of free opening in such orifice.

It will obviously be seen that without departing from the spirit of my invention very many modifications may be made therein, as well as also in the means for carrying the same into operation.

One of the simpler methods of and means for carrying such invention into operation is illustrated in the accompanying drawings, representing only such portions of my apparatus as are necessary to illustrate this inven-

vertical central section my apparatus for reproducing impulses from such record. Fig. 3 shows in rear end view a portion of such apparatus as will be explained. Fig. 5 shows in face view a modified form of a part of my apparatus for recording.

Similar letters and numerals refer to similar parts throughout the several figures.

Referring to Figs. 1 and 2, for effecting such record I employ a diaphragm or other equivalent device A, capable of vibrating in response to such impulses, and suitably secured to an annular seat or rim B. The vibrations of diaphragm A, by means of a rod *a* projecting axially from the center thereof, are conveyed to a stylus or other equivalent device C, having its upper end reduced in thickness, and secured by a screw, as indicated, to a projection *b* located on the upper edge of rim B, as seen in Fig. 1. This stylus C is bifurcated at its lower end, being formed into two curved arms *c*, extending downward to the rear, and on either side of that portion of the fillet R extending between the rollers D and D′, around which such fillet is caused continuously to pass in the direction indicated by the arrows, and with a uniform motion, by means of any suitable devices. (Not shown.) The lower end of each of these arms *c*, as seen, are so curved as to be opposite each other, and a little to the rear of the center in width of the fillet R. Passing through the lower ends of these arms *c*, and firmly secured therein, are seen the two fine-pointed needles *c′* so formed and positioned, as indicated, that when such fillet R is moved in the manner indicated it shall be severed longitudinally into two portions—a forward one *r* and a rear one *r′*—as indicated in Fig. 1.

When the diaphragm A is in a state of rest it will readily be seen that this line of severance will be a straight one; but when such diaphragm is vibrated, it will be seen that such line of severance will present a tracing or marking of the impulses actuating the diaphragm A, thereby producing two fillets—one *r* and one *r′*—each presenting a contour the counterpart of that of the other, and according with the vibrations

ART OF RECORDING AND REPRODUCING IMPULSES.

No. 551,946. Patented Dec. 24, 1895.

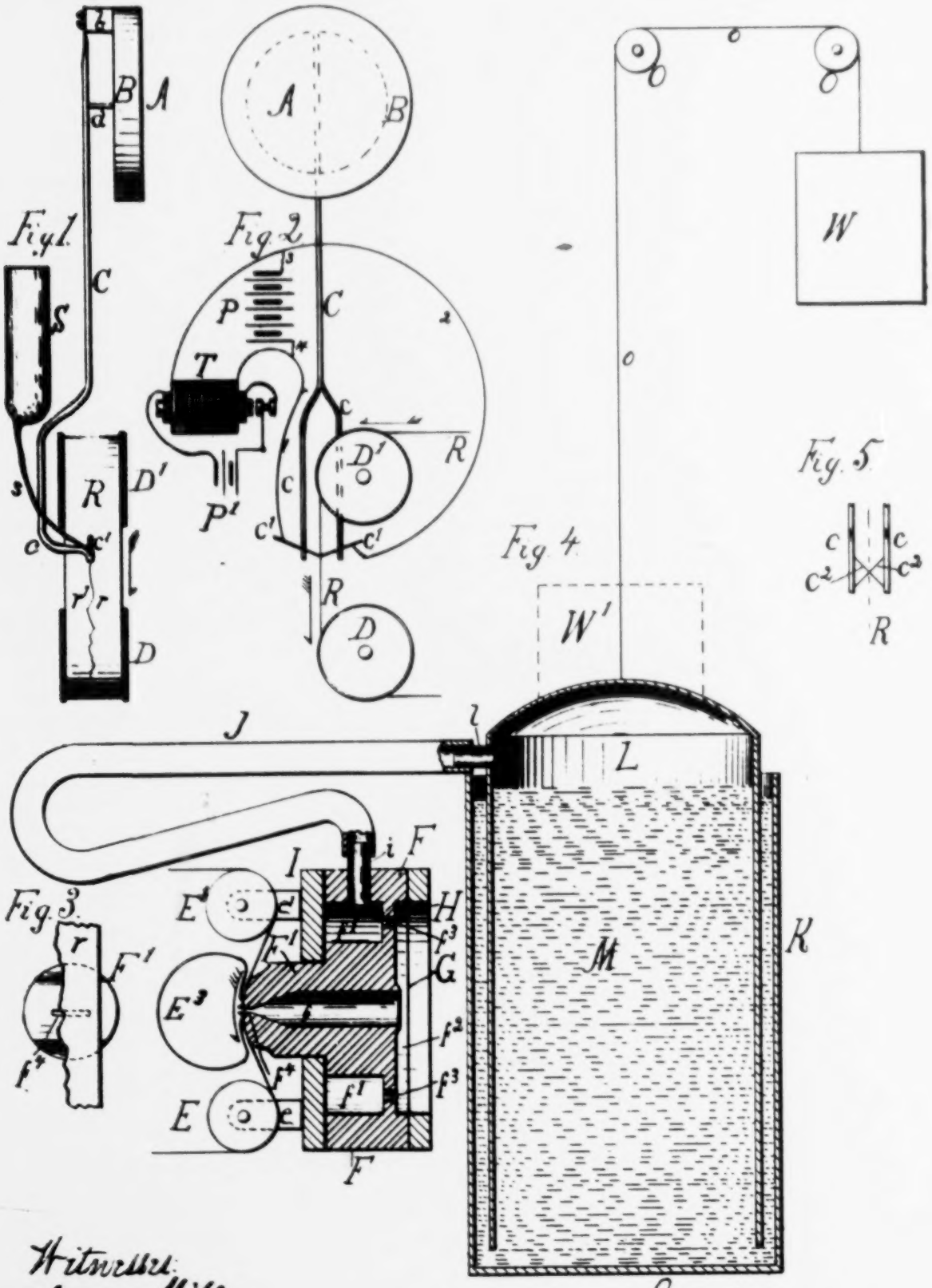

Witnesses:
Aaron Miller
E. M. Kniffen

Inventor:
Wm. H. Cooley

UNITED STATES PATENT OFFICE.

WILLIAM H. COOLEY, OF BROCKPORT, NEW YORK.

ART OF RECORDING AND REPRODUCING IMPULSES.

SPECIFICATION forming part of Letters Patent No. 551,946, dated December 24, 1895.

Application filed April 16, 1889. Serial No. 307,507. (No model.)

To all whom it may concern:

Be it known that I, WILLIAM H. COOLEY, a citizen of the United States, residing at Brockport, in the county of Monroe and State of New York, have invented certain new and useful Improvements in the Art of Recording and Reproducing Impulses, of which the following is a specification.

The object of my invention is the recording of impulses capable of actuating a diaphragm and recording-stylus, or equivalent device, in such a manner that such impulses may, at any desired place and time or number of times, be reproduced from such record.

The essential feature of my record consists in changing the form of the substance upon which such record is written in such a manner that such substance shall present a contour varying exactly according with such original impulses. In reproducing such original impulses I cause such record to more or less nearly close an orifice through which a suitable fluid is allowed to pass under pressure in such a manner as to create varying pressures upon a diaphragm or other equivalent device, which is thus caused to vibrate in a manner to reproduce such original impulses. Such a record may more or less nearly close such an orifice through the medium of a stylus or lever or small rod actuating a valve located in such orifice, and caused to vibrate by the varying contour of such record, when moved before and in contact with such stylus or lever or rod; but it is preferred, when practicable, that such record should of itself, by being passed over or before such orifice, vary, according to the contour of such record, the amount of free opening in such orifice.

It will obviously be seen that without departing from the spirit of my invention very many modifications may be made therein, as well as also in the means for carrying the same into operation.

One of the simpler methods of and means for carrying such invention into operation is illustrated in the accompanying drawings, representing only such portions of my apparatus as are necessary to illustrate this invention. They are as follows:

Figure 1 is a side, and Fig. 2 a face, view of my recording apparatus. Fig. 4 shows in vertical central section my apparatus for reproducing impulses from such record. Fig. 3 shows in rear end view a portion of such apparatus as will be explained. Fig. 5 shows in face view a modified form of a part of my apparatus for recording.

Similar letters and numerals refer to similar parts throughout the several figures.

Referring to Figs. 1 and 2, for effecting such record I employ a diaphragm or other equivalent device A, capable of vibrating in response to such impulses, and suitably secured to an annular seat or rim B. The vibrations of diaphragm A, by means of a rod *a* projecting axially from the center thereof, are conveyed to a stylus or other equivalent device C, having its upper end reduced in thickness, and secured by a screw, as indicated, to a projection *b* located on the upper edge of rim B, as seen in Fig. 1. This stylus C is bifurcated at its lower end, being formed into two curved arms *c*, extending downward to the rear, and on either side of that portion of the fillet R extending between the rollers D and D′, around which such fillet is caused continuously to pass in the direction indicated by the arrows, and with a uniform motion, by means of any suitable devices. (Not shown.) The lower end of each of these arms *c*, as seen, are so curved as to be opposite each other, and a little to the rear of the center in width of the fillet R. Passing through the lower ends of these arms *c*, and firmly secured therein, are seen the two fine-pointed needles *c′* so formed and positioned, as indicated, that when such fillet R is moved in the manner indicated it shall be severed longitudinally into two portions—a forward one *r* and a rear one *r′*—as indicated in Fig. 1.

When the diaphragm A is in a state of rest it will readily be seen that this line of severance will be a straight one; but when such diaphragm is vibrated, it will be seen that such line of severance will present a tracing or marking of the impulses actuating the diaphragm A, thereby producing two fillets—one *r* and one *r′*—each presenting a contour the counterpart of that of the other, and according with the vibrations of diaphragm A. This fillet R may be of thin tough paper or other analogous substance.

Instead of severing the fillet R, the needles

c' may be caused to mark or trace a record of the impulses on fillet R, which may be cut along such line at any time by means of a knife, or otherwise, care being necessary to follow closely the record or tracing; or, in place of the needles c', there may be used fine wires c^3 crossing each other at their centers, as seen in Fig. 5, showing only the lower portion of these arms c, which in this case are elongated downward; or either of these wires may be used singly, according to the tension put upon fillet R in passing over the rollers D and D'.

I will state that any one of the different methods of and means for dividing the fillet R may be used according to the texture, quality and weight of such fillet, which of course should be varied according to the amount and nature of usage it is intended to receive.

Referring to Fig. 4, F is a cylinder of vulcanite or wood connected by a thin web-like partition with a central portion F' somewhat conical in form. Between the forward end of the cylinder F and a rim H of the same material is clamped the diaphragm G of any suitably flexible and elastic substance, thus inclosing a cylindrical chamber f^2. Between this cylinder F and the central portion F' is seen the annular chamber f', inclosed on the rear by the tightly-fitting washer-like cap-piece I, also of wood or vulcanite. Projecting to the rear from this cap-piece I are seen two arms e and e', in which are located bearings respectively for the rollers E and E', around which, in the direction indicated by the arrows, and by means of any suitable devices, (not shown,) there is caused to pass either portion of this fillet R, but preferably the wider portion r, as indicated in Fig. 3.

In passing from the roller E' to the roller E this fillet r passes across the rear end of the central portion F', more or less covering or closing the horizontally-longitudinal opening or slot f^4 therein, as seen also in Fig. 3, showing a rear view of this central portion F' and a portion of this fillet r passing across the end of same. This slot f^4 opens into the tubular chamber f terminating at its forward end in the cylindrical chamber f^2, which in turn is connected with the annular chamber f' by the circular openings f^3—of which there may be any desired number—through the web-like partition connecting the cylinder F and the central portion F'. Through the upper end of this cylinder F is inserted a tube i opening into the annular chamber f'.

K is a cylindrical vessel, which may be of glass, and containing water or other suitable liquid M, in which there is inserted the cylinder L, which may also be of glass, open at its lower end and closed at its upper end, as seen. At the upper end of this cylinder L there is [illegible] tube l, between which and the cylinder L is suspended by means of a cord o passing over pulleys O and O, which may be supported in any suitable manner (not shown) and secured to the weight W. This weight W should be sufficient to raise the cylinder L and thus create a suction through the slot f^4, tubular opening f, chamber f^2, openings f^3, annular chamber f', tube i, rubber tube or hose J, tube l, and into the cylinder L. The amount of such suction may be varied as desired by increasing or decreasing the weight W, and in this way also the initial inward pressure upon diaphragm G may be regulated as desired. When this fillet r is caused to pass around the rollers E and E' in the manner described, thereby varying the amount of free opening of the slot f^4, this diaphragm G, it will be seen, will be caused to vibrate by aerial impulses directed against the center thereof through the tubular opening f and slot f^4. These impulses, it will of course be understood, exactly accord with the contour of the fillet r, whereby such diaphragm G is caused to vibrate in a manner to reproduce such original impulses of which this fillet r presents in its contour a record.

By dispensing with weight W and locating instead thereof a weight as indicated in dotted lines at W' directly on top of cylinder L and starting with the cylinder L at the top of its course, which it should be stated is as high as it can be with the lower edge thereof dipping slightly beneath the surface of the liquid M, then it will be seen that there is created a current exactly the opposite in direction to that just described, and producing an outward or forward pressure upon diaphragm G. Such initial pressure may be varied as desired by changing the amount of weight W'. In this case also diaphragm G is caused to vibrate in a manner to reproduce such original impulses by having such pressure relieved in degrees constantly varying exactly according to the contour of the fillet r. In this case it is preferable that, as an aid in holding the fillet r in place against the rear end of the central portion F', there be used the double spring E^3, formed as seen in Fig. 4, and equal in width with the widest portion of fillet r, and properly held in position by means of a bracket or arm. (Not shown.) The cylinder L may be guided in its course by means of any suitable devices. (Not shown.)

In place of vessels K L, liquid M, weights W or W', cord o, and pulleys O and O, it is preferable that there be employed any suitable mechanism or devices, which may be actuated by the same power that causes the fillet r to move in the manner described, producing a continuous suction, pressure or current, rather than, as in the case just described, a device capable of operating continuously over a period of time proportionate to its size.

the width of the slot f' is small compared with the wave length of the shorter undulation in the contour of fillet r.

To aid in effecting a record in the manner described there may be fed to the recording-points c', in the manner indicated in Fig. 1, any suitable corroding liquid, supplied by means of a suitable capillary tube s from a reservoir S; or, as seen in Fig. 2, these recording-points c' may by means of wires 1 and 2 be made the terminals of the secondary of an induction-coil T, actuated in the manner indicated from the battery P'; or, again, in place of the induction-coil T and battery P', there may be used a battery P or other suitable source of electric energy of high potential, connections being made in this case such as indicated by dotted lines 3 and 4. This band or fillet R may be made of metal; and in this connection I will mention that such a band or fillet, when composed of brass or copper foil, very readily separates along the line written thereon by means of a solution of mercury in nitric acid.

What I claim is—

1. The within described method of recording impulses, consisting in dividing or severing a recording surface of any suitable substance or material into two mechanically separate and distinct parts or portions in such a manner that each part shall be the counterpart of the other and that each part shall present a contour exactly according with such impulses.

2. The within described method of recording impulses consisting in dividing or severing a band or fillet of any suitable substance or material into two mechanically separate and distinct parts or portions, each the counterpart of the other and each varying in width at different points along its length, exactly according with such impulses.

3. A recording surface or substance consisting in a band or fillet of suitable material, a stylus to be actuated by impulses to be recorded, and means for causing such stylus to so divide or sever such band or fillet into two mechanically separate and distinct parts or portions that each part or portion thereof shall present on one of its sides a contour exactly according with such impulses.

4. A recording surface or substance consisting in a band or fillet of suitable material and means for dividing or severing such band or fillet into two mechanically distinct and separate portions along a sinuous line according exactly with the vibrations or impulses imparted to such diaphragm.

5. A recording surface consisting in a fillet of any suitable material and means for dividing the same into two mechanically separate and distinct portions along a line, normally straight, and for varying such line of division exactly according with the impulses to be recorded.

6. A diaphragm or equivalent device, means for subjecting the same upon either side thereof to the pressure of a fluid under motion, means for passing such fluid under pressure through a narrow orifice, elongated in one direction only, means for passing before such orifice, in a manner to more or less close the same, a band or fillet of any suitable material varying in width at successive points longitudinally thereof, exactly according with the impulses to be reproduced.

7. A diaphragm or equivalent device, means for subjecting the same to the pressure of a fluid under motion, means for passing such fluid under pressure through a narrow, elongated orifice, means for causing vibrations in such diaphragm, consisting in a band or fillet of suitable material, varying in width at successive points along its length, exactly according with the vibrations to be reproduced in such diaphragm, and means for passing such band or fillet before such elongated orifice in a manner to more or less close the same.

8. The within described method of and means for recording and reproducing impulses, which consists in dividing or severing a band or fillet of suitable material into two mechanical separate and distinct portions along a line according exactly with such impulses, and then passing either portion of such band or fillet, so divided, before an elongated orifice, in a manner to more or less nearly close the same, and admitting through such orifice, under pressure, a fluid acting upon a suitable diaphragm.

WM. H. COOLEY.

Witnesses:
AARON MILLER,
E. M. KNIFFEN.

c' may be caused to mark or trace a record of the impulses on fillet R, which may be cut along such line at any time by means of a knife, or otherwise, care being necessary to follow closely the record or tracing; or, in place of the needles c', there may be used fine wires c^2 crossing each other at their centers, as seen in Fig. 5, showing only the lower portion of these arms c, which in this case are elongated downward; or either of these wires may be used singly, according to the tension put upon fillet R in passing over the rollers D and D'.

I will state that any one of the different methods of and means for dividing the fillet R may be used according to the texture, quality and weight of such fillet, which of course should be varied according to the amount and nature of usage it is intended to receive.

Referring to Fig. 4, F is a cylinder of vulcanite or wood connected by a thin web-like partition with a central portion F' somewhat conical in form. Between the forward end of the cylinder F and a rim H of the same material is clamped the diaphragm G of any suitably flexible and elastic substance, thus inclosing a cylindrical chamber f^2. Between this cylinder F and the central portion F' is seen the annular chamber f', inclosed on the rear by the tightly-fitting washer-like cap-piece I, also of wood or vulcanite. Projecting to the rear from this cap-piece I are seen two arms e and e', in which are located bearings respectively for the rollers E and E', around which, in the direction indicated by the arrows, and by means of any suitable devices, (not shown,) there is caused to pass either portion of this fillet R, but preferably the wider portion r, as indicated in Fig. 3.

In passing from the roller E' to the roller E this fillet r passes across the rear end of the central portion F', more or less covering or closing the horizontally-longitudinal opening or slot f^4 therein, as seen also in Fig. 3, showing a rear view of this central portion F' and a portion of this fillet r passing across the end of same. This slot f^4 opens into the tubular chamber f terminating at its forward end in the cylindrical chamber f^2, which in turn is connected with the annular chamber f' by the circular openings f^3—of which there may be any desired number—through the web-like partition connecting the cylinder F and the central portion F'. Through the upper end of this cylinder F is inserted a tube i opening into the annular chamber f'.

K is a cylindrical vessel, which may be of glass, and containing water or other suitable liquid M, in which there is inserted the cylinder L, which may also be of glass, open at its lower end and closed at its upper end, as seen. At the upper end of this cylinder L there is inserted the tube l, between which and the tube i connections are made as nearly air-tight as may be by means of a flexible tube J of rubber or other suitable material. This cylinder L is suspended by means of a cord o passing over pulleys O and O, which may be supported in any suitable manner (not shown) and secured to the weight W. This weight W should be sufficient to raise the cylinder L and thus create a suction through the slot f^4, tubular opening f, chamber f^2, openings f^3, annular chamber f', tube i, rubber tube or hose J, tube l, and into the cylinder L. The amount of such suction may be varied as desired by increasing or decreasing the weight W, and in this way also the initial inward pressure upon diaphragm G may be regulated as desired. When this fillet r is caused to pass around the rollers E and E' in the manner described, thereby varying the amount of free opening of the slot f^4, this diaphragm G, it will be seen, will be caused to vibrate by aerial impulses directed against the center thereof through the tubular opening f and slot f^4. These impulses, it will of course be understood, exactly accord with the contour of the fillet r, whereby such diaphragm G is caused to vibrate in a manner to reproduce such original impulses of which this fillet r presents in its contour a record.

By dispensing with weight W and locating instead thereof a weight as indicated in dotted lines at W' directly on top of cylinder L and starting with the cylinder L at the top of its course, which it should be stated is as high as it can be with the lower edge thereof dipping slightly beneath the surface of the liquid M, then it will be seen that there is created a current exactly the opposite in direction to that just described, and producing an outward or forward pressure upon diaphragm G. Such initial pressure may be varied as desired by changing the amount of weight W'. In this case also diaphragm G is caused to vibrate in a manner to reproduce such original impulses by having such pressure relieved in degrees constantly varying exactly according to the contour of the fillet r. In this case it is preferable that, as an aid in holding the fillet r in place against the rear end of the central portion F', there be used the double spring E^3, formed as seen in Fig. 4, and equal in width with the widest portion of fillet r, and properly held in position by means of a bracket or arm. (Not shown.) The cylinder L may be guided in its course by means of any suitable devices. (Not shown.)

In place of vessels K L, liquid M, weights W or W', cord o, and pulleys O and O, it is preferable that there be employed any suitable mechanism or devices, which may be actuated by the same power that causes the fillet r to move in the manner described, producing a continuous suction, pressure or current, rather than, as in the case just described, a device capable of operating continuously over a period of time proportionate to its size.

It will of course be understood that better results are obtained—*i. e.*, a more faithful reproduction of the recorded impulses—when

the width of the slot f^4 is small compared with the wave length of the shorter undulation in the contour of fillet *r*.

To aid in effecting a record in the manner described there may be fed to the recording-points *c'*, in the manner indicated in Fig. 1, any suitable corroding liquid, supplied by means of a suitable capillary tube *s* from a reservoir S; or, as seen in Fig. 2, these recording-points *c'* may by means of wires 1 and 2 be made the terminals of the secondary of an induction-coil T, actuated in the manner indicated from the battery P'; or, again, in place of the induction-coil T and battery P', there may be used a battery P or other suitable source of electric energy of high potential, connections being made in this case such as indicated by dotted lines 3 and 4. This band or fillet R may be made of metal; and in this connection I will mention that such a band or fillet, when composed of brass or copper foil, very readily separates along the line written thereon by means of a solution of mercury in nitric acid.

What I claim is—

1. The within described method of recording impulses, consisting in dividing or severing a recording surface of any suitable substance or material into two mechanically separate and distinct parts or portions in such a manner that each part shall be the counterpart of the other and that each part shall present a contour exactly according with such impulses.

2. The within described method of recording impulses consisting in dividing or severing a band or fillet of any suitable substance or material into two mechanically separate and distinct parts or portions, each the counterpart of the other and each varying in width at different points along its length, exactly according with such impulses.

3. A recording surface or substance consisting in a band or fillet of suitable material, a stylus to be actuated by impulses to be recorded, and means for causing such stylus to so divide or sever such band or fillet into two mechanically separate and distinct parts or portions that each part or portion thereof shall present on one of its sides a contour exactly according with such impulses.

4. A recording surface or substance consisting in a band or fillet of suitable material and means for dividing or severing such band or fillet into two mechanically distinct and separate portions along a sinuous line according exactly with the vibrations or impulses imparted to such diaphragm.

5. A recording surface consisting in a fillet of any suitable material and means for dividing the same into two mechanically separate and distinct portions along a line, normally straight, and for varying such line of division exactly according with the impulses to be recorded.

6. A diaphragm or equivalent device, means for subjecting the same upon either side thereof to the pressure of a fluid under motion, means for passing such fluid under pressure through a narrow orifice, elongated in one direction only, means for passing before such orifice, in a manner to more or less close the same, a band or fillet of any suitable material varying in width at successive points longitudinally thereof, exactly according with the impulses to be reproduced.

7. A diaphragm or equivalent device, means for subjecting the same to the pressure of a fluid under motion, means for passing such fluid under pressure through a narrow, elongated orifice, means for causing vibrations in such diaphragm, consisting in a band or fillet of suitable material, varying in width at successive points along its length, exactly according with the vibrations to be reproduced in such diaphragm, and means for passing such band or fillet before such elongated orifice in a manner to more or less close the same.

8. The within described method of and means for recording and reproducing impulses, which consists in dividing or severing a band or fillet of suitable material into two mechanical separate and distinct portions along a line according exactly with such impulses, and then passing either portion of such band or fillet, so divided, before an elongated orifice, in a manner to more or less nearly close the same, and admitting through such orifice, under pressure, a fluid acting upon a suitable diaphragm.

WM. H. COOLEY.

Witnesses:
AARON MILLER,
E. M. KNIFFEN.

(No Model.) 2 Sheets—Sheet 1.

C. ADER.

PHOTOGRAPHIC TELEGRAPH RECORDER.

No. 565,657. Patented Aug. 11, 1896.

Fig. 1

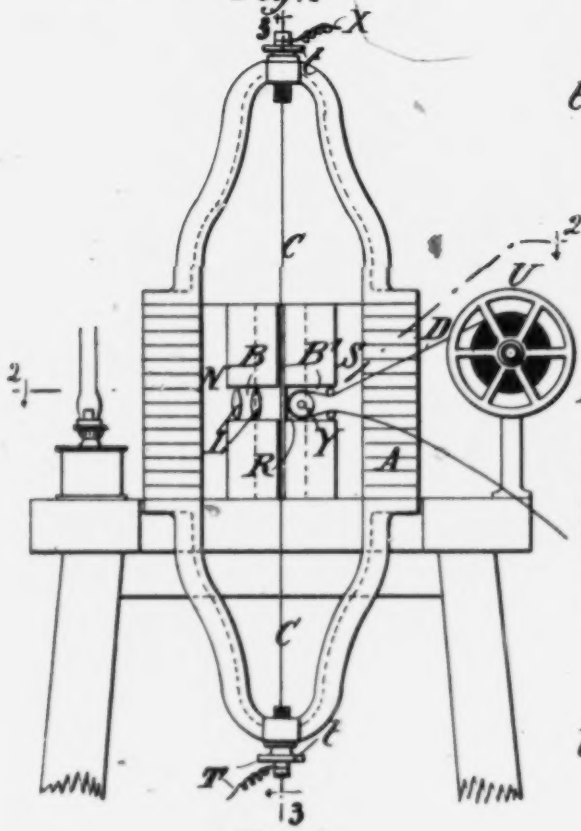

Fig. 3

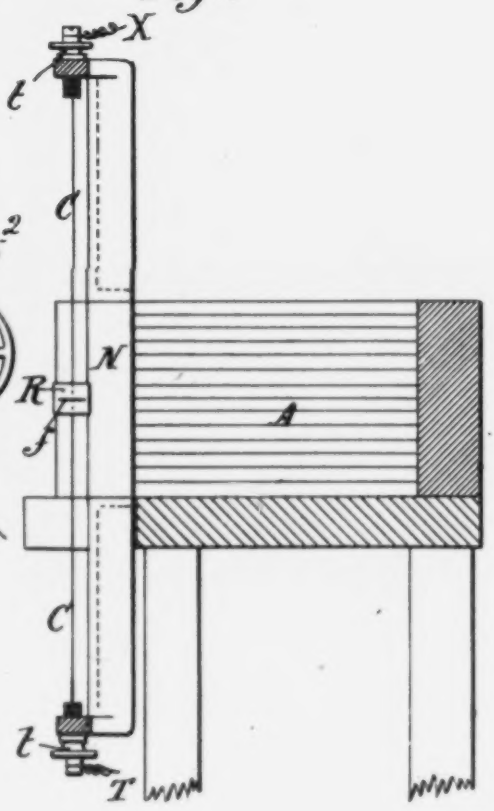

Fig. 2

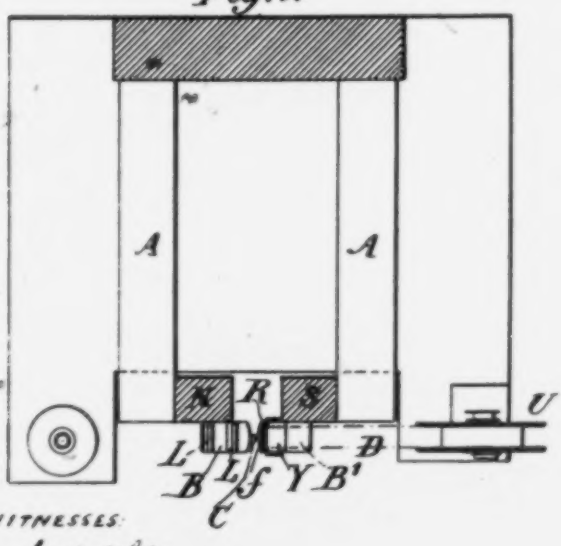

WITNESSES:
Fred White
Thomas F. Wallace

INVENTOR
Clément Ader,
By his Attorneys
Thurston & Fraser & Co.

(No Model.) 2 Sheets—Sheet 2.

C. ADER.

PHOTOGRAPHIC TELEGRAPH RECORDER.

No. 565,657 Patented Aug. 11, 1896.

Fig. 4

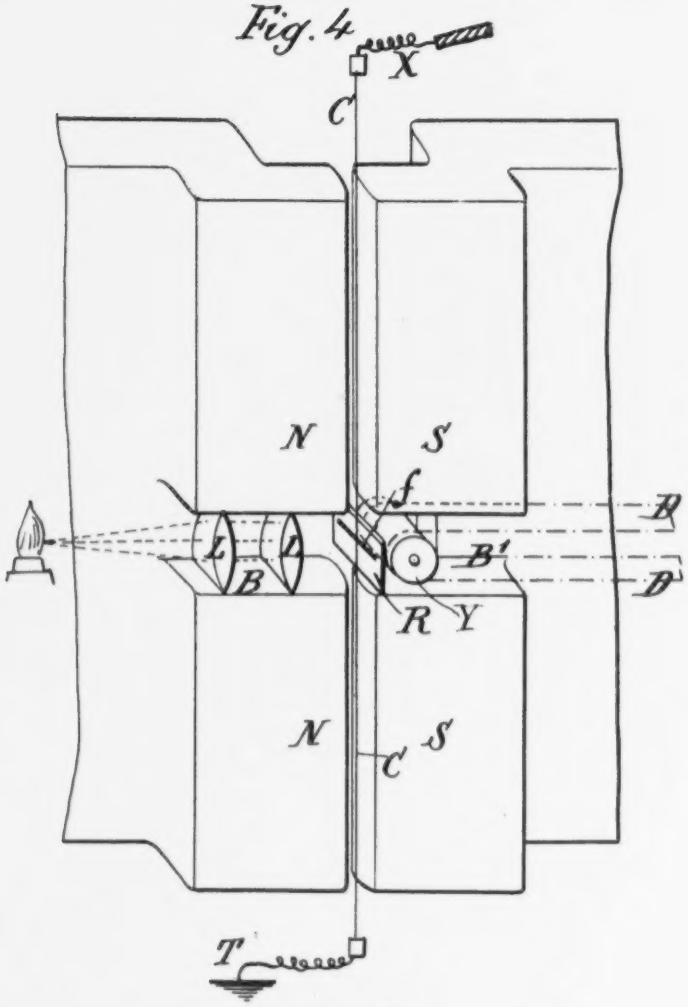

Fig. 5

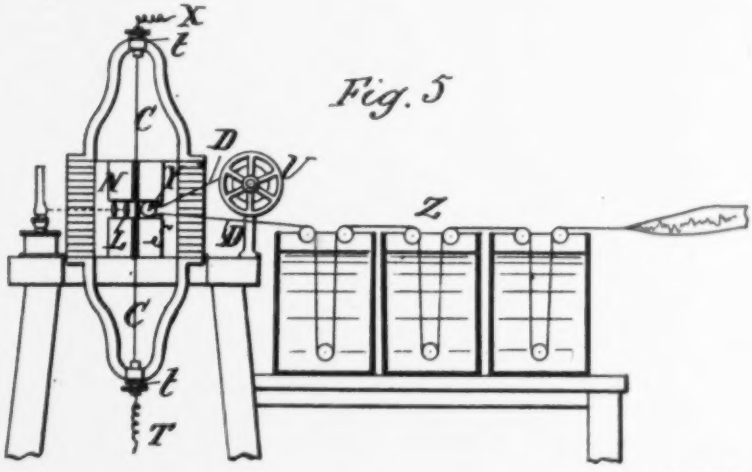

WITNESSES:
Fred White

INVENTOR:
Clément Ader.

UNITED STATES PATENT OFFICE.

CLEMENT ADER, OF PARIS, FRANCE, ASSIGNOR TO LA SOCIÉTÉ INDUSTRIELLE DES TÉLÉPHONES, OF SAME PLACE.

PHOTOGRAPHIC TELEGRAPH-RECORDER.

SPECIFICATION forming part of Letters Patent No. 565,657, dated August 11, 1896.

Application filed October 24, 1895. Serial No. 566,682. (No model.) Patented in France April 16, 1895, No. 246,669.

To all whom it may concern:

Be it known that I, CLEMENT ADER, a citizen of the Republic of France, residing in Paris, France, have invented certain new and useful Improvements in Photographic Telegraph-Recorders, (which invention has been patented in France, No. 246,669, dated April 16, 1895,) of which the following is a specification.

This invention relates to photographic telegraph-recorders, and aims to provide certain improvements therein, which will be hereinafter fully set forth with reference to the accompanying drawings.

The invention provides a new recording receiver, comprising, essentially, the following parts: first, a magnetic field very long, straight, and strong; second, a naked-wire conductor, very fine, extending throughout the length of the magnetic field and traversed by the currents of the line, which may be a submarine or underground cable or a long overhead line; third; a rigid screen having a straight notch placed close to the wire, perpendicular thereof, with its center opposite the normal position of the wire; fourth, a system of lenses concentrating the light of a lamp on the straight notch and on the wire, and, fifth, a sensitized telegraphic band, traveling in the dark behind the straight slot and the wire, for photographing at each displacement of the wire a line on the band where the shadow of the wire strikes it through the slot, which line corresponds in its undulations to the extent and duration of the various deflections of the wire.

Suitable means for driving the band, protecting it from other actinic rays than those traversing the slot, and suitable developing and fixing media are employed, as usual, so that when the band is completed its surface is all darkened except a white undulating line which results from the movements of the wire, and which constitutes a record of the telegraphic signals transmitted through it. The length of the wire and its extended exposure to the strong magnetic field are con-

light which passes through the slot, and hence must always be effective in disclosing on the band its position. The magnetic field may be caused by the pole-pieces of either a powerful permanent magnet or of an electro-magnet.

I will now describe in detail the preferred embodiment of my improved system, with reference to the accompanying drawings, in which—

Figure 1 is a fragmentary front elevation of my improved receiver. Fig. 2 is a plan view thereof, partly in section, on the line 2 2 of Fig. 1. Fig. 3 is a vertical mid-section thereof on the line 3 3 of Fig. 1. Fig. 4 is a fragmentary perspective view on a larger scale, looking from the front and partially diagrammatic. Fig. 5 is a fragmentary front elevation of the apparatus shown in Fig. 1 on a smaller scale, and showing the developing and fixing media in vertical section.

Referring to Figs. 1 to 5, inclusive, I will describe the embodiment of my invention therein shown. In these figures N and S are the pole-pieces of a powerful magnet, either a permanent or an electro magnet, the former being shown. These pole-pieces are very long, straight, parallel, and disposed in close proximity, say, about one-half of a millimeter apart. For the purposes of demonstration and clearness in the drawings these pole-pieces are given the appearance of an exaggerated separation and comparative shortness; but in reality they are as close together as will permit the movement of the wire, the inner adjacent faces of the pole-pieces being so close as to almost contact with the bare wire. It is between these faces, which are preferably slightly convex, that the magnetic field is all concentrated. In the transverse middle of the pole-pieces is a transverse notch, that in the piece N being lettered B and that in the piece S being lettered B′. These notches receive certain of the other organs of the apparatus. The length of the magnetic field will be varied, according to the necessities of cable use between [illegible]

(No Model.) 2 Sheets—Sheet 2.

C. ADER.

PHOTOGRAPHIC TELEGRAPH RECORDER.

No. 565,657 Patented Aug. 11, 1896.

Fig. 4

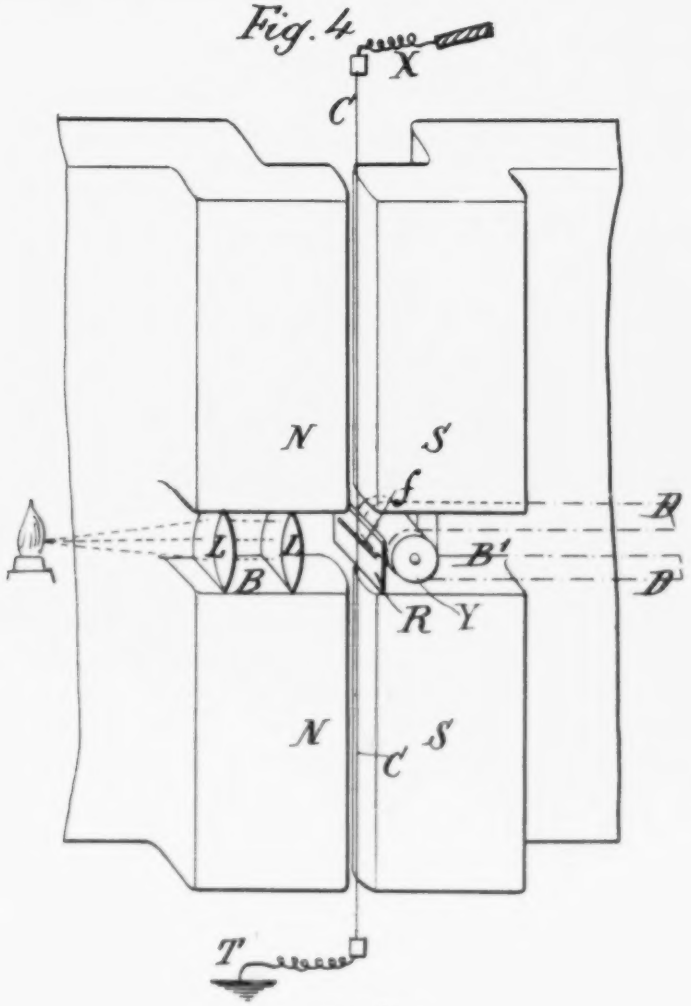

Fig. 5

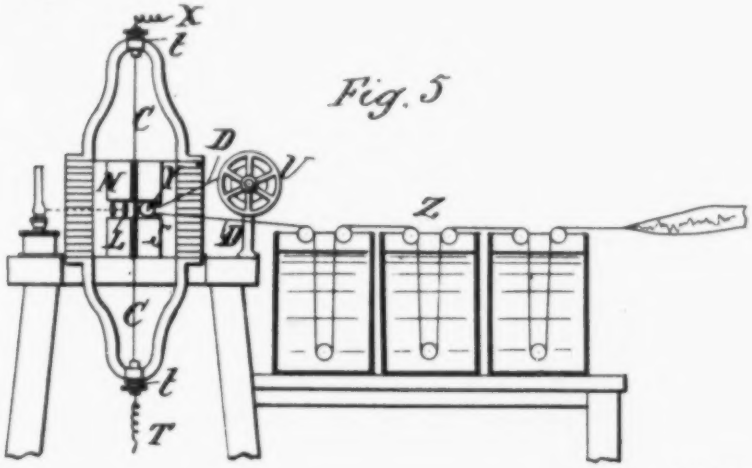

WITNESSES:
Fred White
Thomas F. Wallace

INVENTOR:
Clément Ader,
By his Attorneys
Arthur C. Fraser & Co.

UNITED STATES PATENT OFFICE.

CLEMENT ADER, OF PARIS, FRANCE, ASSIGNOR TO LA SOCIÉTÉ INDUSTRIELLE DES TÉLÉPHONES, OF SAME PLACE.

PHOTOGRAPHIC TELEGRAPH-RECORDER.

SPECIFICATION forming part of Letters Patent No. 565,657, dated August 11, 1896.

Application filed October 24, 1895. Serial No. 566,682. (No model.) Patented in France April 16, 1895, No. 246,669.

To all whom it may concern:

Be it known that I, CLEMENT ADER, a citizen of the Republic of France, residing in Paris, France, have invented certain new and useful Improvements in Photographic Telegraph-Recorders, (which invention has been patented in France, No. 246,669, dated April 16, 1895,) of which the following is a specification.

This invention relates to photographic telegraph-recorders, and aims to provide certain improvements therein, which will be hereinafter fully set forth with reference to the accompanying drawings.

The invention provides a new recording receiver, comprising, essentially, the following parts: first, a magnetic field very long, straight, and strong; second, a naked-wire conductor, very fine, extending throughout the length of the magnetic field and traversed by the currents of the line, which may be a submarine or underground cable or a long overhead line; third, a rigid screen having a straight notch placed close to the wire, perpendicular thereof, with its center opposite the normal position of the wire; fourth, a system of lenses concentrating the light of a lamp on the straight notch and on the wire, and, fifth, a sensitized telegraphic band, traveling in the dark behind the straight slot and the wire, for photographing at each displacement of the wire a line on the band where the shadow of the wire strikes it through the slot, which line corresponds in its undulations to the extent and duration of the various deflections of the wire.

Suitable means for driving the band, protecting it from other actinic rays than those traversing the slot, and suitable developing and fixing media are employed, as usual, so that when the band is completed its surface is all darkened except a white undulating line which results from the movements of the wire, and which constitutes a record of the telegraphic signals transmitted through it. The length of the wire and its extended exposure to the strong magnetic field are conducive to marked deflections on its part corresponding to the nature and extent of the positive or negative currents traversing it. The wire constantly interrupts part of the light which passes through the slot, and hence must always be effective in disclosing on the band its position. The magnetic field may be caused by the pole-pieces of either a powerful permanent magnet or of an electro-magnet.

I will now describe in detail the preferred embodiment of my improved system, with reference to the accompanying drawings, in which—

Figure 1 is a fragmentary front elevation of my improved receiver. Fig. 2 is a plan view thereof, partly in section, on the line 2 2 of Fig. 1. Fig. 3 is a vertical mid-section thereof on the line 3 3 of Fig. 1. Fig. 4 is a fragmentary perspective view on a larger scale, looking from the front and partially diagrammatic. Fig. 5 is a fragmentary front elevation of the apparatus shown in Fig. 1 on a smaller scale, and showing the developing and fixing media in vertical section.

Referring to Figs. 1 to 5, inclusive, I will describe the embodiment of my invention therein shown. In these figures N and S are the pole-pieces of a powerful magnet, either a permanent or an electro magnet, the former being shown. These pole-pieces are very long, straight, parallel, and disposed in close proximity, say, about one-half of a millimeter apart. For the purposes of demonstration and clearness in the drawings these pole-pieces are given the appearance of an exaggerated separation and comparative shortness; but in reality they are as close together as will permit the movement of the wire, the inner adjacent faces of the pole-pieces being so close as to almost contact with the bare wire. It is between these faces, which are preferably slightly convex, that the magnetic field is all concentrated. In the transverse middle of the pole-pieces is a transverse notch, that in the piece N being lettered B and that in the piece S being lettered B′. These notches receive certain of the other organs of the apparatus. The length of the magnetic field will be varied, according to the necessities of cable use, between O^m10 and O^m50, and even more, if necessary.

A wire C, of red copper, or preferably of silver or aluminium, extremely fine, say, about two or three one-hundredths of a millimeter

in diameter, and bare, is stretched from one end to the other of the magnetic field by the tension-screws *t* and maintained in the middle of the field. It is exposed at its middle, where it traverses the band, opposite the slot *f* of the screen R. All the current arriving from the cable will pass at X to the wire C and will leave it at T for earth, or any other arrangement whereby the current traversing the telegraphic line shall also traverse this wire can be used. It follows by reason of the well-known law as to the effect of magnetic fields on electric currents that the wire when traversed by a current will be moved in the magnetic field proportionally to the intensity of the current which traverses it and to the left or right, according to whether this be a positive or a negative current. The fineness of the wire will have the further result of furnishing the necessary resistance to the passage of the current, and its excessive length, say, about one to one and a half meters, will render insignificant the inertia to be overcome or resulting from its movements.

In the well-known siphon recorders the bobbin and the siphons in movement weigh from one gram to three grams in the most delicate instruments, whereas my bare wire will weigh, perhaps, from one to two milligrams, (about one thousand times less,) and as its resistance will be as great as that of the bobbins of other recorders and it will oscillate in a magnetic field as strong its deflections will be almost instantaneous, and the friction tending to arrest its movements will be only that furnished by the resistance of the air. Thus the rapidity of action of the apparatus is guaranteed.

The screen R is painted black and is stationary or fixed relatively to the armature and close to the wire. A slot *f* is extended through it for a length equal to the width of the paper band. This slot will be straight and narrow and as close to the photographic paper as possible, to the end that this paper will be most sensible to the light traversing the slot. The position of the slot is perpendicular to the wire. The regulating-screw permits the putting of the screen in the most desirable position.

Lenses L, convex in a sense and rectilinear horizontally, or any other means, may be used to confine or concentrate the rays of light from a lamp in parallel alinement on all the extent of the slot *f*. One may use two or three lenses, two being shown, or mirrors, if it is necessary for the proper direction of the rays of light.

All the parts of the apparatus, or only those necessarily so, as desired, will be inclosed in a casing, excluding any sort of external light from the sensitized paper except that reaching it through the slot *f*.

the slot by passing over the roller Y, and the light makes its effect on the band as it passes this point. The speed of movement of the band is measured, regular, and continuous past the slot and the wire C in front of it. The wire forms a shadow on the band through the slot, which shadow is displaced each instant with the movement of the wire as it is deflected. This shadow will be photographed on the band, and it is its impression which forms the record or signal.

In practice all the band will be affected by the light, to the end that finally the band will be more or less black or darkened with a narrow white line on its middle, which will form the signal. After leaving the impression-position the band will pass automatically through several developing and fixing baths Z, as shown on a small scale in Fig. 5, to make permanent the signal or record thereof.

Of course one can employ the band either in the dark or in a dark-red light.

It will be seen that my invention provides improvements in telegraphic recorders which can be variously and advantageously availed of, and it will be understood that the invention is not limited in its application to the particular details of construction, arrangement, and operation shown nor to the particular media for availing of the principles employed by my invention, as it can be employed according to such modifications of structural details, arrangement, and operation and according to such equivalents of the means shown as circumstances or the judgment of those skilled in the art may dictate without departing from the spirit of the invention.

I do not claim, broadly, as my invention either the use of a chemical or photographic telegraphic recorder, or the principle of continuously photographing the displacements of a conductor stretched in a magnetic field as these features are commonly employed in such apparatus; but what I do claim is the various features of improvement in photographic telegraphic recorders which are specified in the claims hereinafter contained.

What I claim is, in photographic telegraph-recorders and other devices for registering telegraphic signals from submarine or underground cables or long aerial lines, and for other purposes, the following-defined novel features and combinations, substantially as hereinbefore set forth, namely:

1. A permanent magnet having apertures in the longitudinal center of its pole-pieces, a source of light opposite one of said apertures, and a sensitized traveling band opposite the other aperture, in combination with a stretched vibrating wire in the magnetic field between and longitudinally of said pole-

of light to said material to the portion thereof opposite its slot, and said wire interrupting such flow and casting a shadow through such slot onto said material, whereby the deflection of the wire can be photographed thereon.

2. The combination with a long fine naked vibrating wire conducting the currents of a telegraphic line, of a magnet having long pole-pieces having adjacent convex faces substantially parallel with and in close proximity to but not touching said wire, a screw stretching and adjusting said wire, and means near the middle of the magnetic field for photographing the deflections of the wire, substantially as and for the purpose set forth.

3. The combination with a magnet A having pole-pieces N S having notches B B', of a wire C between said pole-pieces and adapted to be traversed by the currents of an electric circuit, a screen R and a moving band D of sensitized material in one of said notches, said screen having a slot *f* crossing said wire and exposing said band, and means in the other of said notches concentrating a flow of light toward said screen, whereby the shadow of said wire through said slot is photographed on said band for recording the deflections of said wire.

In witness whereof I have hereunto signed my name in the presence of two subscribing witnesses.

CLEMENT ADER.

Witnesses:

CLYDE SHROPSHIRE,

MICHEL COQUART.

in diameter, and bare, is stretched from one end to the other of the magnetic field by the tension-screws *t* and maintained in the middle of the field. It is exposed at its middle, where it traverses the band, opposite the slot *f* of the screen R. All the current arriving from the cable will pass at X to the wire C and will leave it at T for earth, or any other arrangement whereby the current traversing the telegraphic line shall also traverse this wire can be used. It follows by reason of the well-known law as to the effect of magnetic fields on electric currents that the wire when traversed by a current will be moved in the magnetic field proportionally to the intensity of the current which traverses it and to the left or right, according to whether this be a positive or a negative current. The fineness of the wire will have the further result of furnishing the necessary resistance to the passage of the current, and its excessive length, say, about one to one and a half meters, will render insignificant the inertia to be overcome or resulting from its movements.

In the well-known siphon recorders the bobbin and the siphons in movement weigh from one gram to three grams in the most delicate instruments, whereas my bare wire will weigh, perhaps, from one to two milligrams, (about one thousand times less,) and as its resistance will be as great as that of the bobbins of other recorders and it will oscillate in a magnetic field as strong its deflections will be almost instantaneous, and the friction tending to arrest its movements will be only that furnished by the resistance of the air. Thus the rapidity of action of the apparatus is guaranteed.

The screen R is painted black and is stationary or fixed relatively to the armature and close to the wire. A slot *f* is extended through it for a length equal to the width of the paper band. This slot will be straight and narrow and as close to the photographic paper as possible, to the end that this paper will be most sensible to the light traversing the slot. The position of the slot is perpendicular to the wire. The regulating-screw permits the putting of the screen in the most desirable position.

Lenses L, convex in a sense and rectilinear horizontally, or any other means, may be used to confine or concentrate the rays of light from a lamp in parallel alinement on all the extent of the slot *f*. One may use two or three lenses, two being shown, or mirrors, if it is necessary for the proper direction of the rays of light.

All the parts of the apparatus, or only those necessarily so, as desired, will be inclosed in a casing, excluding any sort of external light from the sensitized paper except that reaching it through the slot *f*.

The sensitized band D is rolled on a cylindrical roller Y, which is regulated so as to be able to bring the band close against the screen R without touching the latter. A reel U delivers the band, which is presented at rear of the slot by passing over the roller Y, and the light makes its effect on the band as it passes this point. The speed of movement of the band is measured, regular, and continuous past the slot and the wire C in front of it. The wire forms a shadow on the band through the slot, which shadow is displaced each instant with the movement of the wire as it is deflected. This shadow will be photographed on the band, and it is its impression which forms the record or signal.

In practice all the band will be affected by the light, to the end that finally the band will be more or less black or darkened with a narrow white line on its middle, which will form the signal. After leaving the impression-position the band will pass automatically through several developing and fixing baths Z, as shown on a small scale in Fig. 5, to make permanent the signal or record thereof.

Of course one can employ the band either in the dark or in a dark-red light.

It will be seen that my invention provides improvements in telegraphic recorders which can be variously and advantageously availed of, and it will be understood that the invention is not limited in its application to the particular details of construction, arrangement, and operation shown nor to the particular media for availing of the principles employed by my invention, as it can be employed according to such modifications of structural details, arrangement, and operation and according to such equivalents of the means shown as circumstances or the judgment of those skilled in the art may dictate without departing from the spirit of the invention.

I do not claim, broadly, as my invention either the use of a chemical or photographic telegraphic recorder, or the principle of continuously photographing the displacements of a conductor stretched in a magnetic field as these features are commonly employed in such apparatus; but what I do claim is the various features of improvement in photographic telegraphic recorders which are specified in the claims hereinafter contained.

What I claim is, in photographic telegraph-recorders and other devices for registering telegraphic signals from submarine or underground cables or long aerial lines, and for other purposes, the following-defined novel features and combinations, substantially as hereinbefore set forth, namely:

1. A permanent magnet having apertures in the longitudinal center of its pole-pieces, a source of light opposite one of said apertures, and a sensitized traveling band opposite the other aperture, in combination with a stretched vibrating wire in the magnetic field between and longitudinally of said pole-pieces, adapted to be traversed by the current of a telegraphic line and deflected according to such current, and a stationary slotted screen between said material and source of light, said screen confining the flow

of light to said material to the portion thereof opposite its slot, and said wire interrupting such flow and casting a shadow through such slot onto said material, whereby the deflection of the wire can be photographed thereon.

2. The combination with a long fine naked vibrating wire conducting the currents of a telegraphic line, of a magnet having long pole-pieces having adjacent convex faces substantially parallel with and in close proximity to but not touching said wire, a screw stretching and adjusting said wire, and means near the middle of the magnetic field for photographing the deflections of the wire, substantially as and for the purpose set forth.

3. The combination with a magnet A having pole-pieces N S having notches B B', of a wire C between said pole-pieces and adapted to be traversed by the currents of an electric circuit, a screen R and a moving band D of sensitized material in one of said notches, said screen having a slot *f* crossing said wire and exposing said band, and means in the other of said notches concentrating a flow of light toward said screen, whereby the shadow of said wire through said slot is photographed on said band for recording the deflections of said wire.

In witness whereof I have hereunto signed my name in the presence of two subscribing witnesses.

CLEMENT ADER.

Witnesses:
CLYDE SHROPSHIRE,
MICHEL COQUART.

896

(No Model.) 3 Sheets—Sheet 1.

J. W. HOLST.

KINEMATOGRAPHIC LANTERN OR APPARATUS.

No. 587,527. Patented Aug. 3, 1897.

Fig 1.

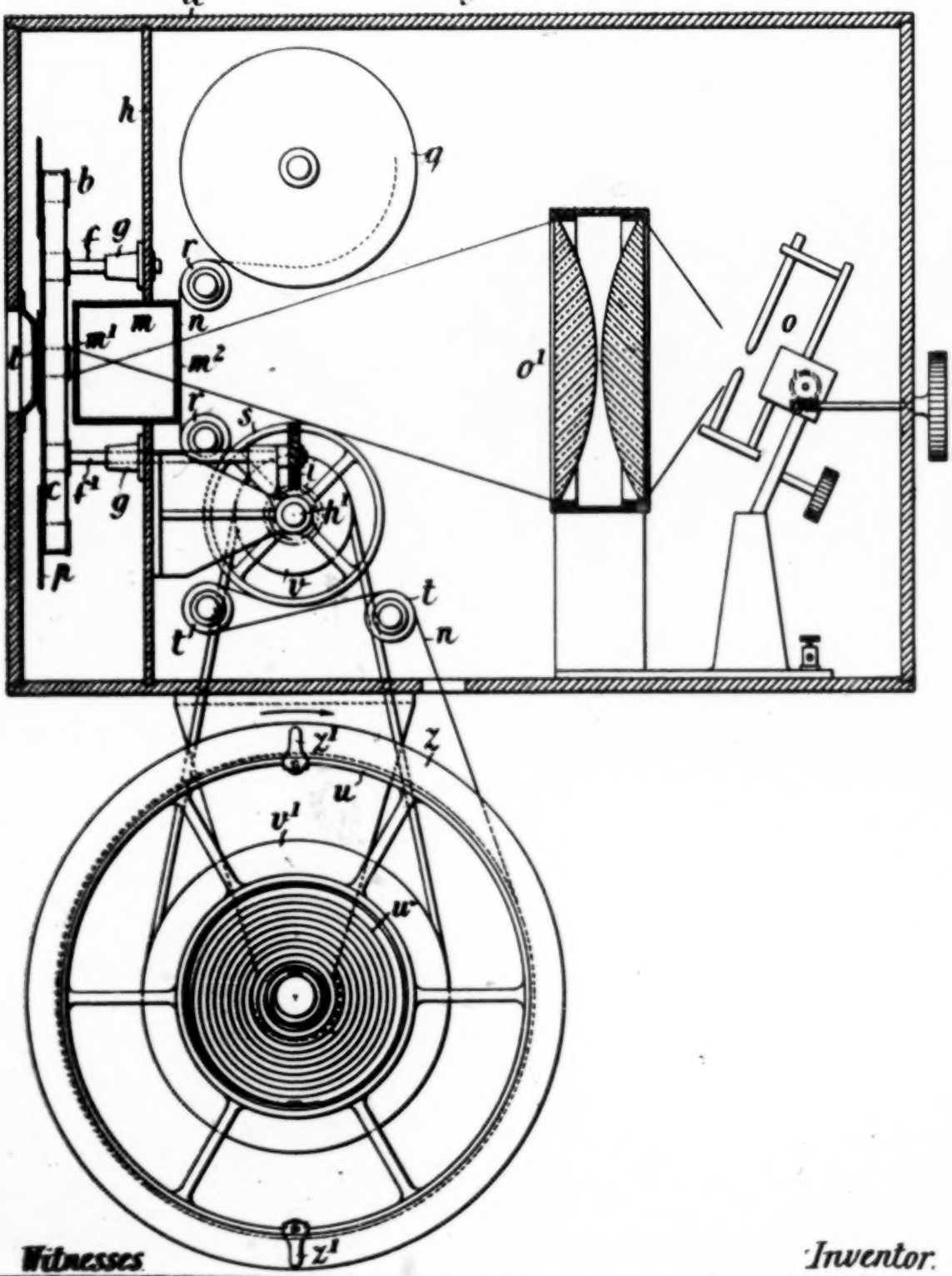

Witnesses

Inventor.

J. W. HOLST.

KINEMATOGRAPHIC LANTERN OR APPARATUS.

No. 587,527. Patented Aug. 3, 1897.

Fig. 1.

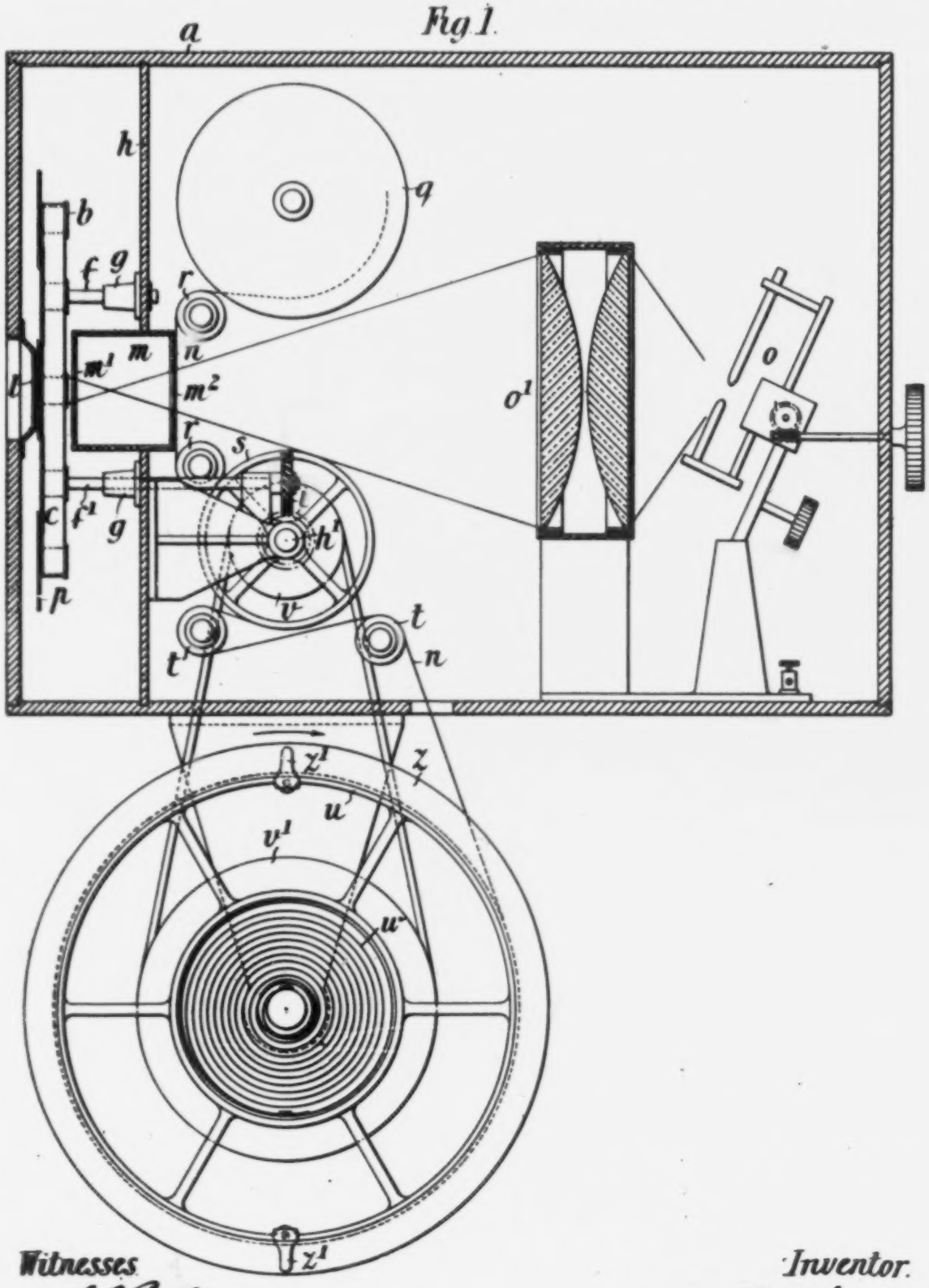

Witnesses

G. F. Redfern

John E. Bousfield.

Inventor.

J. W. Holst.

898

(No Model.) 3 Sheets—Sheet 2.

J. W. HOLST.

KINEMATOGRAPHIC LANTERN OR APPARATUS.

No. 587,527. Patented Aug. 3, 1897.

Fig. 2.

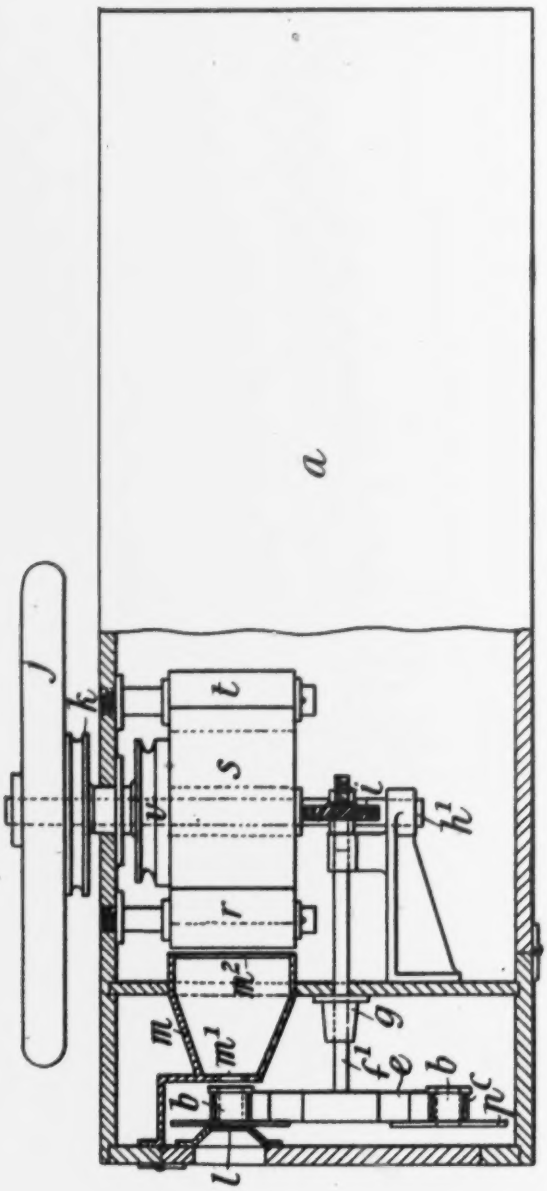

Witnesses.

Inventor.

J. W. HOLST.

KINEMATOGRAPHIC LANTERN OR APPARATUS.

No. 587,527. Patented Aug. 3, 1897.

Fig 2

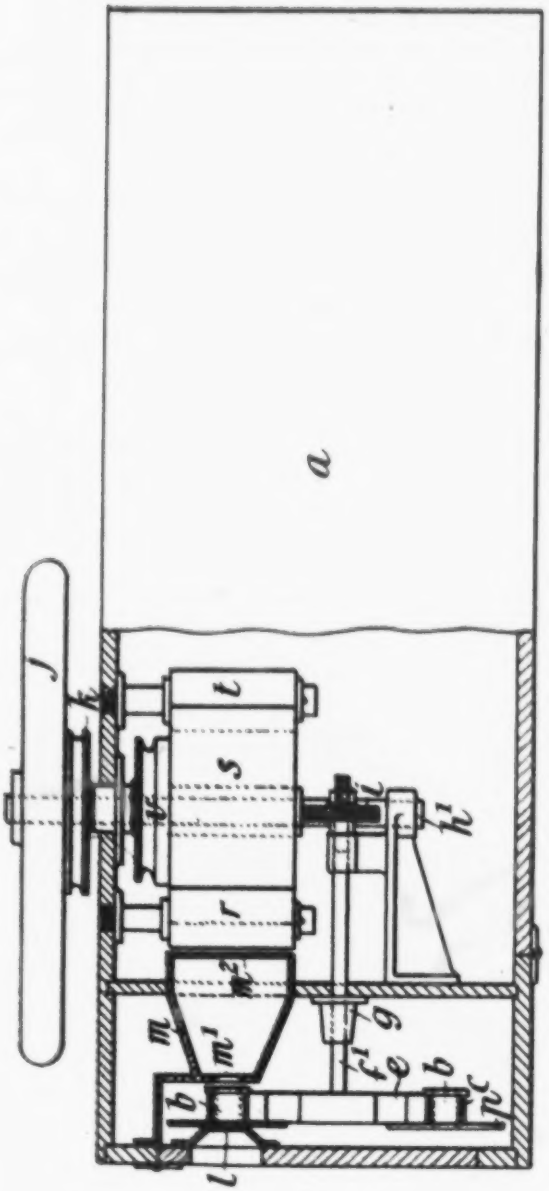

Witnesses.

G. F. Redfern

John P. Bousfield.

Inventor.

J. W. Holst.

900

(No Model.) 3 Sheets--Sheet 3.

J. W. HOLST.

KINEMATOGRAPHIC LANTERN OR APPARATUS.

No. 587,527. Patented Aug. 3, 1897.

Fig. 3

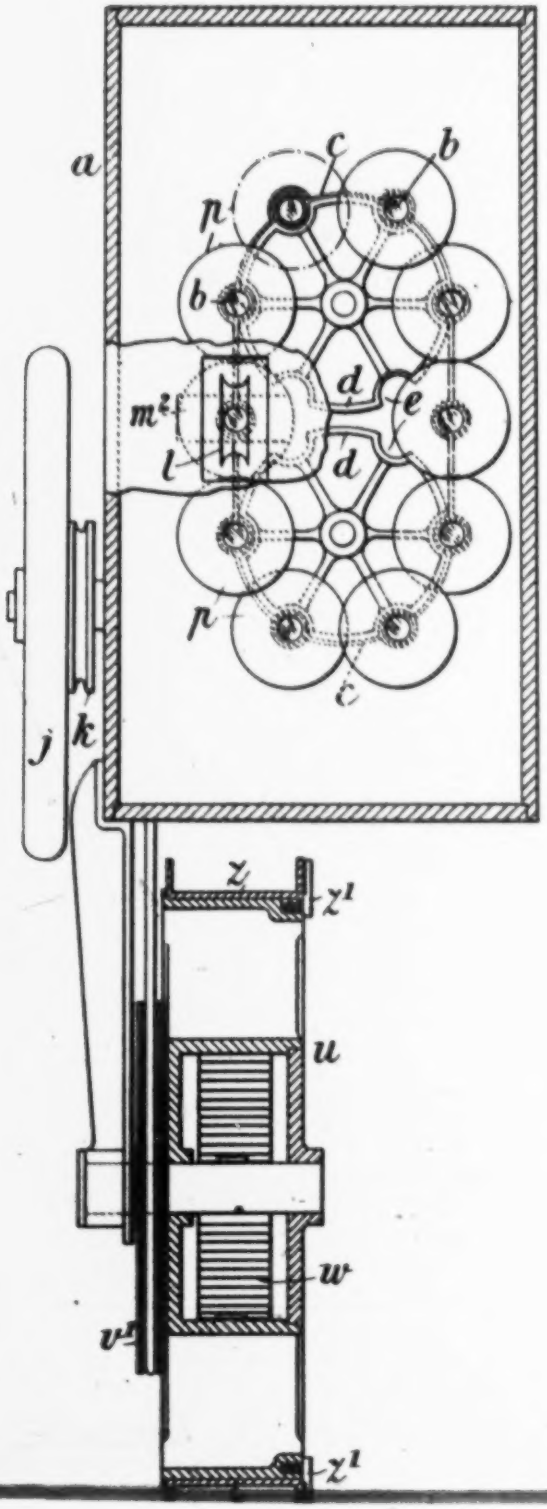

Fig. 4

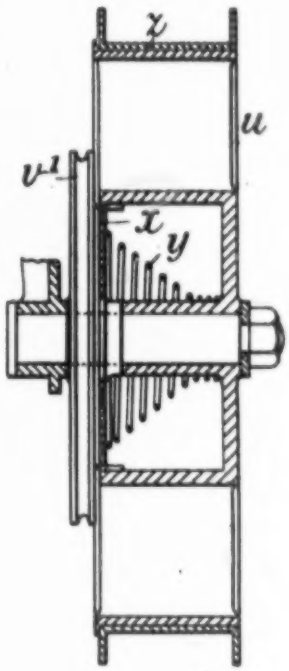

UNITED STATES PATENT OFFICE.

JOHAN WILHELM HOLST, OF AMSTERDAM, NETHERLANDS.

KINEMATOGRAPHIC LANTERN OR APPARATUS.

SPECIFICATION forming part of Letters Patent No. 587,527, dated August 3, 1897.

Application filed December 23, 1896. Serial No. 616,783. (No model.)

To all whom it may concern:

Be it known that I, JOHAN WILHELM HOLST, a subject of the Queen of the Netherlands, residing at Amsterdam, Netherlands, have invented new and useful Improvements in Kinematographic Lanterns or Apparatus, of which the following is a specification.

My invention relates to lanterns for projecting kinematographic pictures onto a screen. In apparatus of this class as heretofore constructed there is a considerable amount of vibration set up, owing to the rapid intermittent motion of some of the parts. The object of my invention is to overcome this vibration, and to this end I provide the improvements hereinafter described.

In carrying out my invention I advantageously provide the following arrangement of mechanism: I fix the series of lenses in an endless band (hereinafter referred to as the "lens-carrier") mounted upon two wheels or drums having peripheral recesses to receive the said lenses, and I provide driving mechanism for moving this lens-carrier at a predetermined speed. The film-band is drawn from a suitable drum over guide-rollers and a feed-roller, which latter is connected with the lens-carrying drums—for instance, by screw-gearing—so that the lens-carrier and picture-band will move at the proper speed. The feed-roller may move the picture-band either by friction or by means of pins or points engaging with the edges of the band. The picture-band after passing the feed-roller is wound onto a drum driven positively but capable of an independent motion—such, for instance, as is provided for by connecting the said drum to its axle by means of a volute spring or by a friction-coupling.

To enable my invention to be fully understood, I will describe the same by reference to the accompanying drawings, in which—

Figure 1 is a sectional side elevation of my improved apparatus. Fig. 2 is a sectional plan view of the same. Fig. 3 is a sectional front elevation. Fig. 4 is a sectional view illustrating a modification.

Similar letters of reference indicate similar lens-carrier, which carrier is advantageously made of two strips of thin spring-steel, bent at suitable points to receive the lenses between them and riveted together between the said lenses.

d d are the two wheels or drums carrying the series of lenses and having recesses *e e* in their peripheries to receive the projections caused by the lenses on one side of the lens-carrier. The wheels *d d* are mounted on two shafts *f f'*, carried in bearings *g g*, fixed to a partition *h* in the box *a*, the shaft *f'* being extended through the said partition, so that motion may be imparted to it and consequently also to the lens-carrier through the medium of a shaft *h'* and suitable gear-wheels *i i*. As shown in the drawings, screw gear-wheels are shown for transmitting the motion of the shaft *h'* to the shaft *f'*, but any other suitable form of gearing may, however, be used for the purpose.

j is a fly-wheel attached to the shaft *h'* for obtaining regularity of movement, and *k* is a pulley by means of which the power of a motor—say, for instance, a small electric motor—may be applied to the apparatus through the medium of a belt for operating the same.

l is an opening in the front of the lantern past which the lenses are successively moved, and *m* is a small box mounted in the partition *h* and having in it openings *m' m²*, past the latter of which the picture-band *n* is moved at the same speed as the lenses.

o is an electric lamp or lighting apparatus, and *o'* is a condenser.

In practice the lenses are arranged at such distances apart that the marginal rays projected through one lens will not intersect those projected through the preceding lens.

In order to prevent light from reaching the screen except through the lenses, the said lenses have in connection with them disks *p p*, which overlap each other and form a shutter, as shown in Figs. 1 and 3.

The picture-band *n* is drawn from the drum *q* (hereinafter referred to as the "store-drum") over the guide-rollers *r r*, around the

J. W. HOLST.

KINEMATOGRAPHIC LANTERN OR APPARATUS.

No. 587,527. Patented Aug. 3, 1897.

Fig. 3

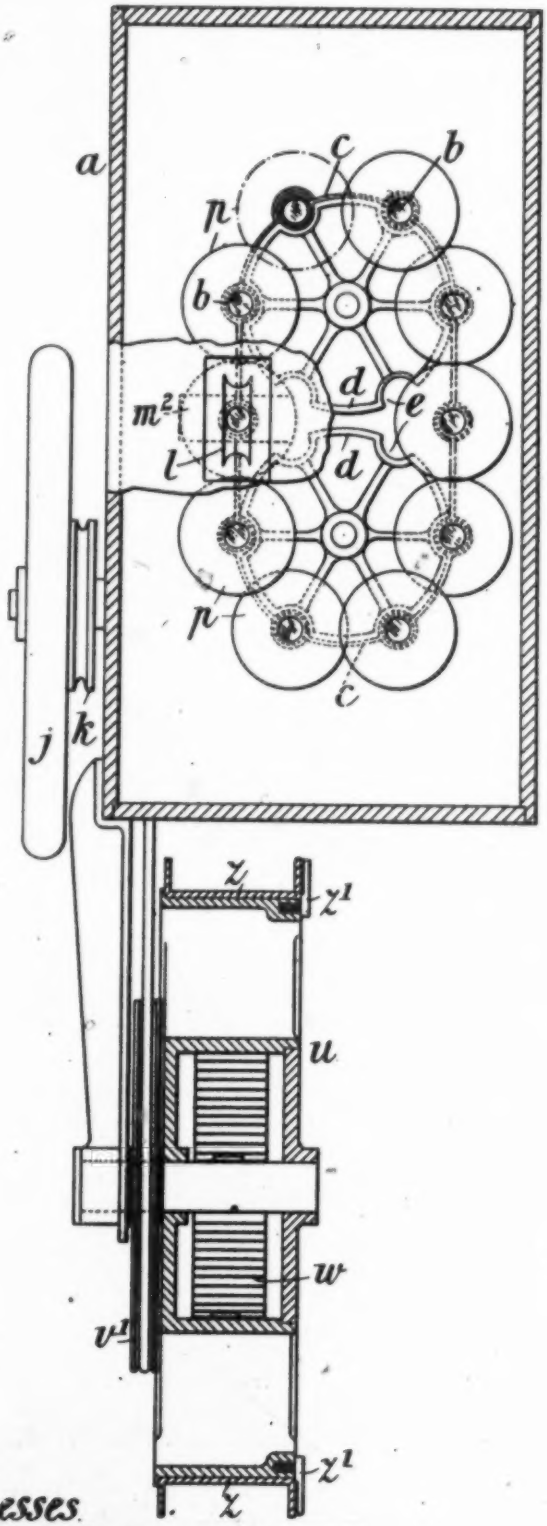

Fig. 4

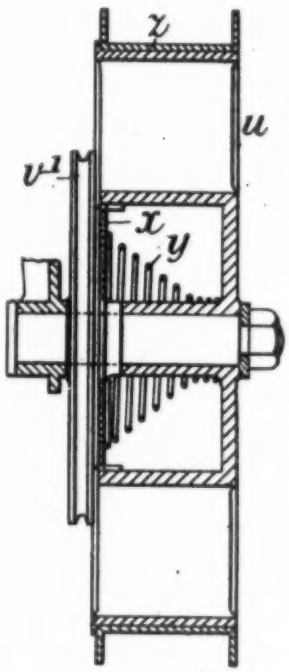

Witnesses.

G. F. Redfern

John E. Bousfield.

Inventor.

J. W. Holst.

UNITED STATES PATENT OFFICE.

JOHAN WILHELM HOLST, OF AMSTERDAM, NETHERLANDS.

KINEMATOGRAPHIC LANTERN OR APPARATUS.

SPECIFICATION forming part of Letters Patent No. 587,527, dated August 3, 1897.

Application filed December 23, 1896. Serial No. 616,783. (No model.)

To all whom it may concern:

Be it known that I, JOHAN WILHELM HOLST, a subject of the Queen of the Netherlands, residing at Amsterdam, Netherlands, have invented new and useful Improvements in Kinematographic Lanterns or Apparatus, of which the following is a specification.

My invention relates to lanterns for projecting kinematographic pictures onto a screen. In apparatus of this class as heretofore constructed there is a considerable amount of vibration set up, owing to the rapid intermittent motion of some of the parts. The object of my invention is to overcome this vibration, and to this end I provide the improvements hereinafter described.

In carrying out my invention I advantageously provide the following arrangement of mechanism: I fix the series of lenses in an endless band (hereinafter referred to as the "lens-carrier") mounted upon two wheels or drums having peripheral recesses to receive the said lenses, and I provide driving mechanism for moving this lens-carrier at a predetermined speed. The film-band is drawn from a suitable drum over guide-rollers and a feed-roller, which latter is connected with the lens-carrying drums—for instance, by screw-gearing—so that the lens-carrier and picture-band will move at the proper speed. The feed-roller may move the picture-band either by friction or by means of pins or points engaging with the edges of the band. The picture-band after passing the feed-roller is wound onto a drum driven positively but capable of an independent motion—such, for instance, as is provided for by connecting the said drum to its axle by means of a volute spring or by a friction-coupling.

To enable my invention to be fully understood, I will describe the same by reference to the accompanying drawings, in which—

Figure 1 is a sectional side elevation of my improved apparatus. Fig. 2 is a sectional plan view of the same. Fig. 3 is a sectional front elevation. Fig. 4 is a sectional view illustrating a modification.

Similar letters of reference indicate similar or corresponding parts throughout the drawings.

a is the box or body of the lantern.

b b are the projecting lenses, and *c* is the lens-carrier, which carrier is advantageously made of two strips of thin spring-steel, bent at suitable points to receive the lenses between them and riveted together between the said lenses.

d d are the two wheels or drums carrying the series of lenses and having recesses *e e* in their peripheries to receive the projections caused by the lenses on one side of the lens-carrier. The wheels *d d* are mounted on two shafts *f f'*, carried in bearings *g g*, fixed to a partition *h* in the box *a*, the shaft *f'* being extended through the said partition, so that motion may be imparted to it and consequently also to the lens-carrier through the medium of a shaft *h'* and suitable gear-wheels *i i*. As shown in the drawings, screw gear-wheels are shown for transmitting the motion of the shaft *h'* to the shaft *f'*, but any other suitable form of gearing may, however, be used for the purpose.

j is a fly-wheel attached to the shaft *h'* for obtaining regularity of movement, and *k* is a pulley by means of which the power of a motor—say, for instance, a small electric motor—may be applied to the apparatus through the medium of a belt for operating the same.

l is an opening in the front of the lantern past which the lenses are successively moved, and *m* is a small box mounted in the partition *h* and having in it openings *m' m²*, past the latter of which the picture-band *n* is moved at the same speed as the lenses.

o is an electric lamp or lighting apparatus, and *o'* is a condenser.

In practice the lenses are arranged at such distances apart that the marginal rays projected through one lens will not intersect those projected through the preceding lens.

In order to prevent light from reaching the screen except through the lenses, the said lenses have in connection with them disks *p p*, which overlap each other and form a shutter, as shown in Figs. 1 and 3.

The picture-band *n* is drawn from the drum *q* (hereinafter referred to as the "store-drum") over the guide-rollers *r r*, around the feed-wheel *s*, and over the guide-rollers *t t* onto the winding-drum *u*. The motion of the band is effected through the medium of the feed-wheel *s*, which is mounted upon the shaft *h'*, and the diameter of which is such that it

moves the band *n* at precisely the same speed as that at which the lenses move. As hereinbefore stated, if the friction of the film-band upon the surface of the feed-wheel *s* is not deemed sufficient to cause the proper feeding of the said band pins or points adapted to engage with the edges of the band may be employed.

A brake of any suitable construction is applied to the store-drum to prevent it from unwinding too fast and to maintain the tension of the band.

The drum *u*, onto which the band is wound after illumination, is driven from the shaft *h'* through the medium of the pulleys *v v'*, which are so proportioned to each other that the peripheral speed of the said drum will correspond with that of the feed-wheel *s*. As, owing to the winding of the band upon the said drum, the diameter of the winding-surface will increase and so tend to move the band forward faster than it is moved by the feed-wheel, I provide that the peripheral speed of the surface onto which the film-band is wound shall remain uniform—that is to say, I arrange a volute spring *w* between the axle of the said drum and the drum itself, as will be clearly understood by reference to Figs. 1 and 2. With this arrangement the excess of speed which the said axle has beyond that of the drum will be absorbed by the said spring, which will be more or less coiled up. The said spring must in all cases be applied so that its tendency to uncoil serves to maintain the band taut.

Before attaching the end of the picture-band to the drum *u* it is advisable to give the drum one or two turns in order to put the spring under sufficient tension to maintain the band taut.

Instead of transmitting the motion to the drum *u* through the spring *w*, I may arrange in conjunction with the said drum a disk *x*, which rotates with the drum, but which is pressed into frictional contact with a friction-surface on the pulley *v'* by a spring *y* in a manner which will be clearly understood by reference to Fig. 4.

The friction between the disk *x* and the surface of the pulley *v'* must at all times be sufficient to rotate the drum, but at the same time permit of the pulley *v'* moving forward independently of the drum should the latter be retarded, the slip taking place between the said disk *x* and the surface of the pulley against which it bears.

It will be noticed in the drawings that the drum *u* is represented as provided with a false rim *z*, onto which the picture-band is wound and which is capable of being removed from the drum with the band upon it. Any means may be employed for fixing the false rim upon the drum *u*. As shown in the drawings, I have represented small turnbuckles *z'* as being used for the purpose.

Having now particularly described and ascertained the nature of my said invention and in what manner the same is to be performed, I declare that what I claim is—

In a kinematographic lantern, the combination with the endless carrier, a pair of rotary supporting devices therefor, the portions of said carrier between the supporting devices being maintained in a straight line, a series of lenses carried by said carrier, means for supporting a film in line with the path of said lenses, intermediate said supporting devices, an illuminating device in rear of said film and means for moving said film and carrier uniformly at the same speed and in the same direction, substantially as described.

JOHAN WILHELM HOLST.

Witnesses:
G. F. REDFERN,
JOHN E. BOUSFIELD.

904

(No Model.) 3 Sheets—Sheet 1.

A. C. CLARK.

GRAMOPHONE.

No. 597,875. Patented Jan. 25, 1898.

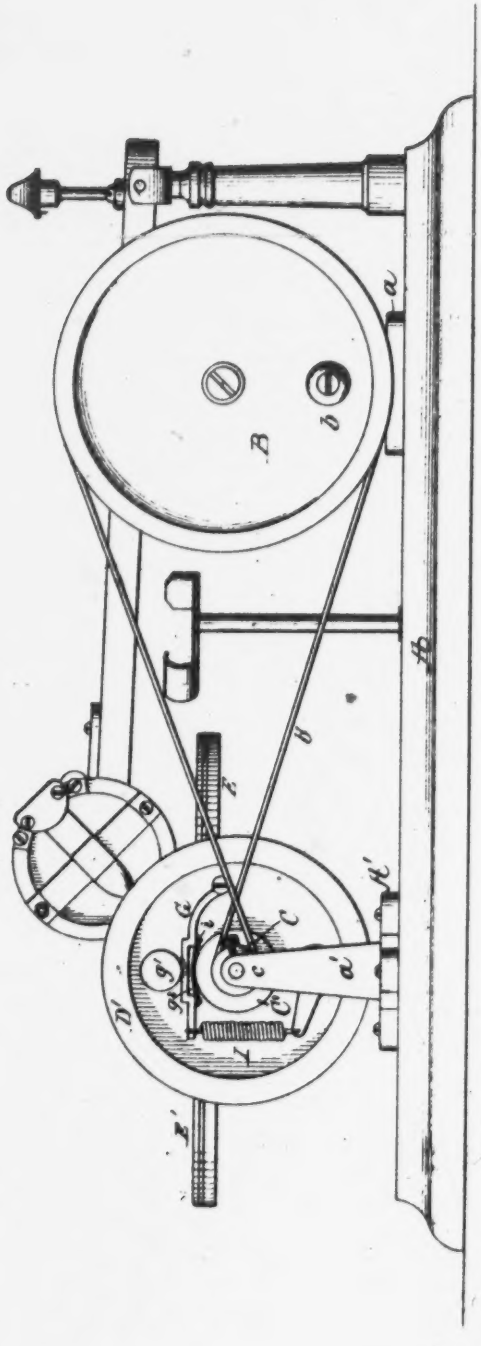

FIG. 1.

Witnesses:
Charles L. Coe
Murray C. Boyer

Inventor:
Alfred Corning Clark
by his Attorneys.
Howson & Howson

(No Model.) 3 Sheets—Sheet 2.

A. C. CLARK.

GRAMOPHONE.

No. 597,875. Patented Jan. 25, 1898.

FIG. 2.

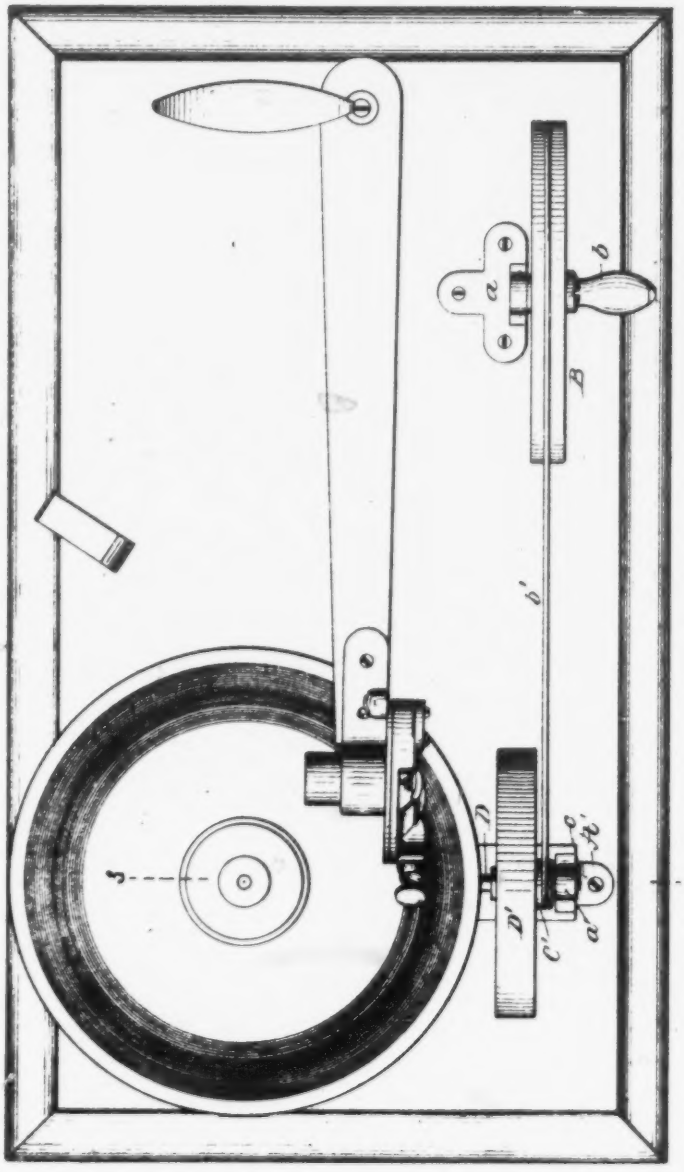

Witnesses:
Charles De Cow
Murray C. Boyce

Inventor:
Alfred Corning Clark
by his Attorneys,
Howson & Howson

(No Model.) 3 Sheets—Sheet 3.

A. C. CLARK.

GRAMOPHONE.

No. 597,875. Patented Jan. 25, 1898.

FIG. 4.

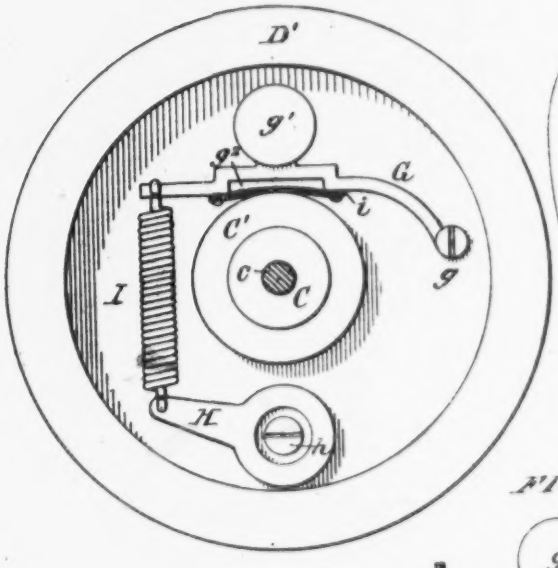

FIG. 5.

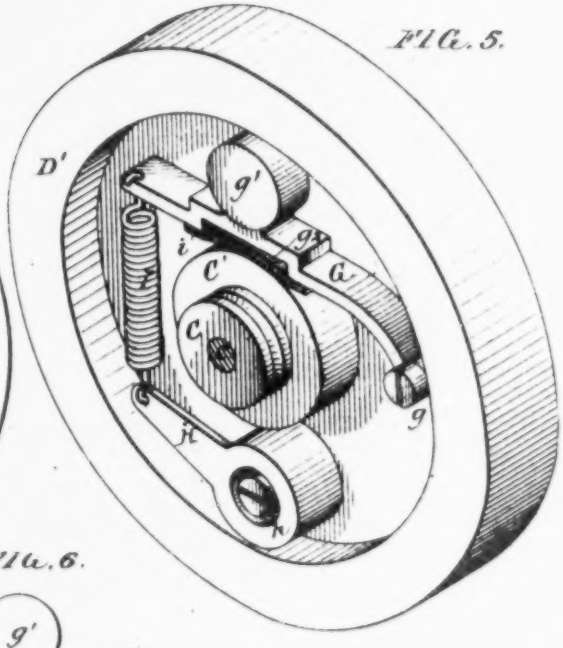

FIG. 6.

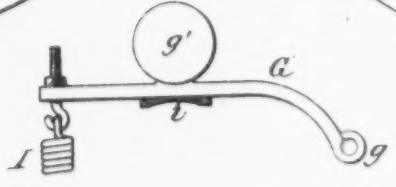

FIG. 3.

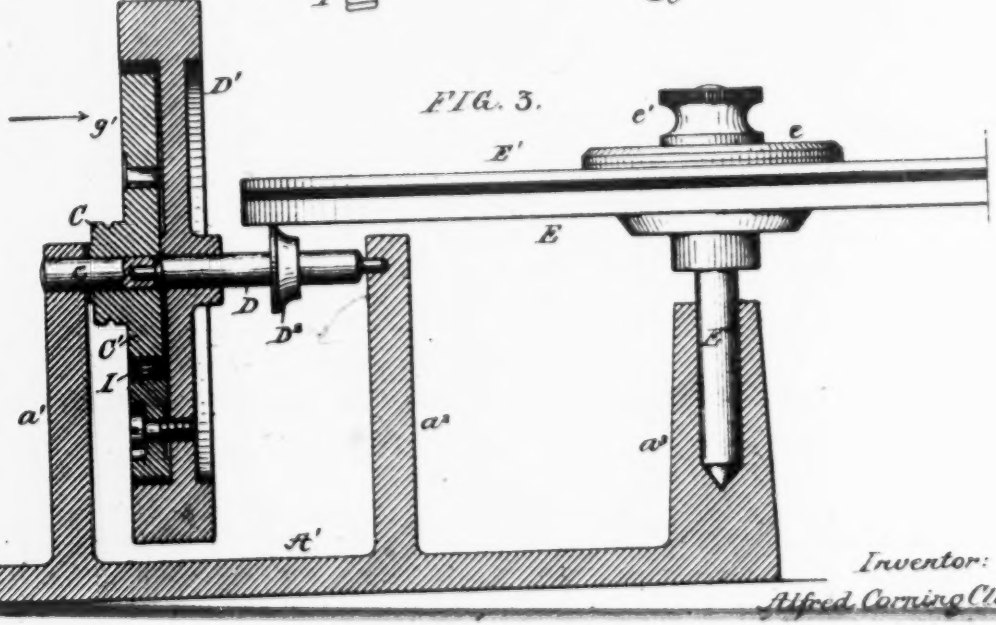

Inventor:
Alfred Corning Clark

UNITED STATES PATENT OFFICE.

ALFRED CORNING CLARK, OF NEW YORK, N. Y., ASSIGNOR TO THE UNITED STATES GRAMOPHONE COMPANY, OF WASHINGTON, DISTRICT OF COLUMBIA.

GRAMOPHONE.

SPECIFICATION forming part of Letters Patent No. 597,875, dated January 25, 1898.

Application filed December 4, 1896. Serial No. 614,487. (No model.)

To all whom it may concern:

Be it known that I, ALFRED CORNING CLARK, a citizen of the United States, and a resident of New York city, New York, have invented certain Improvements in Gramophones, of which the following is a specification.

The object of my invention is to regulate the speed of the record-tablet of a gramophone in such a manner that uneven turning of the driving mechanism will not affect the tablet, so that the instrument will reproduce in an even tone the sounds recorded on the tablet. This object I attain in the following manner, reference being had to the accompanying drawings, in which—

Figure 1 is a side view of a gramophone, illustrating my invention. Fig. 2 is a plan view. Fig. 3 is a sectional view on the line 3 3, Fig. 2. Fig. 4 is a view of the fly-wheel, looking in the direction of the arrow, Fig. 3. Fig. 5 is a perspective view of the fly-wheel, and Fig. 6 is a view of a modification of the brake.

My invention is shown in connection with a gramophone for which Letters Patent were granted to Emile Berliner on February 19, 1895, No. 534,543.

A is the base of the machine, on which is mounted the bearing *a* for the driving-wheel B, which has a crank-handle *b* to be grasped by the operator. This driving-wheel is grooved for the reception of a driving-band *b'*, which passes around a small grooved pulley C, having a friction-disk C'. This pulley is mounted loosely on a stud *c*, secured to a post *a'*, projecting from a plate A', mounted on the base A.

D is a shaft having reduced journals, one journal being adapted to an opening in the end of the stud *c*, while the opposite journal is adapted to a post a^2, projecting from the plate A', Fig. 3.

Secured to the shaft D is a fly-wheel D', and also on this shaft is the friction-wheel D^2, which is in frictional contact with the revolving table E, on which is mounted the record-tablet E'. The table is mounted on a vertical shaft E^2, adapted to a deep bearing in the standard a^3, which projects from the plate A'. The record-tablet is clamped to the table in the ordinary manner by the washer *e* and nut *e'*.

Pivoted at *g* to the face of the fly-wheel D' is an arm G, preferably provided with a weight *g'*. To the end of this arm is attached a spring I. The opposite end of this spring is attached to an arm H, secured to the face of the fly-wheel by a clamp-screw *h*. The head of this arm also acts as the counterbalance-weight for the arm G. I preferably recess the arm G at g^2 and stretch across the space friction material, such as leather, which will rest upon the friction-disk of the driven pulley C; but the arm may be made, as shown in Fig. 6, with simply a piece of rubber or felt substituted for the friction-piece *i*. The arm H is so set and the tension of the spring is such that the arm G will, owing to the centrifugal force, move away from the disk and thus break the connection between the fly-wheel and the driving-wheel, so that no matter how irregular the operator turns the driving-wheel the speed of the fly-wheel and the table will always remain the same, providing there is sufficient speed in the first instance to give the proper results.

It is impossible for any one to evenly drive the machine with a small driving-wheel and crank-handle, which is necessary to produce the best results. The record is placed upon the tablet when it is driven at a regular speed, and if the speed of the machine in reproducing is increased or diminished the sound-waves will vary to such an extent that the reproduction will be very imperfect, and in a machine of this character means must be provided whereby any one who undertakes to turn the driving-wheel will reproduce the recorded sounds in the best possible manner. This I accomplish by placing between the driving mechanism and the table mechanism which will govern the rotation of the table.

It will be understood that the mechanism shown may be modified without departing from my invention, and it may be placed in a different position; but the governing mechanism must be between the driving mechanism and the driven table or tablet, so that the speed of the tablet will not be affected by the uneven turning of the driving mechanism.

I claim as my invention—

1. The combination in a gramophone, of the driving mechanism, a rotatable table on which the record-tablet is mounted, a driven shaft, a flanged fly-wheel thereon, a driven

(No Model.) 3 Sheets - Sheet 3

A. C. CLARK.

GRAMOPHONE.

No. 597,875. Patented Jan 25, 1898.

FIG. 4.

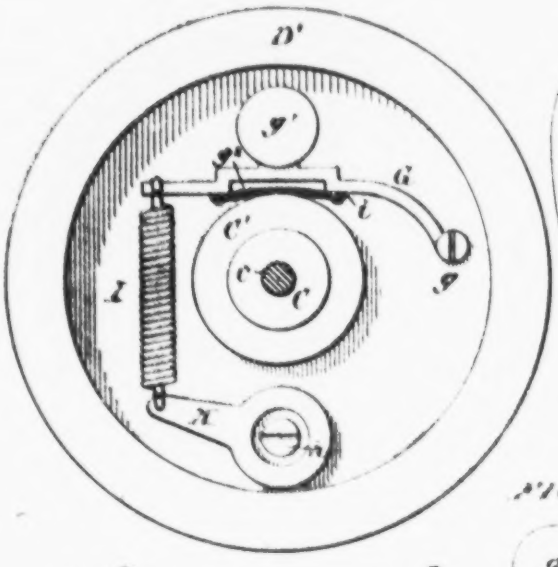

FIG. 5.

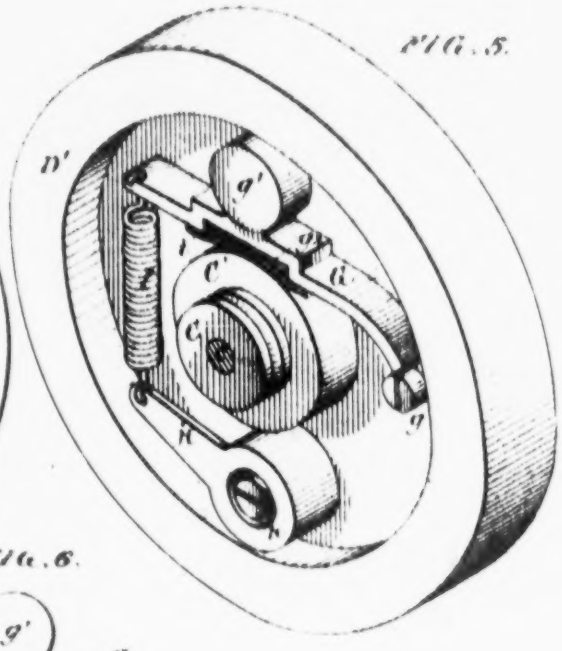

FIG. 6.

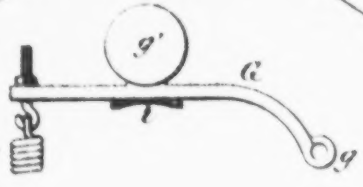

FIG. 3.

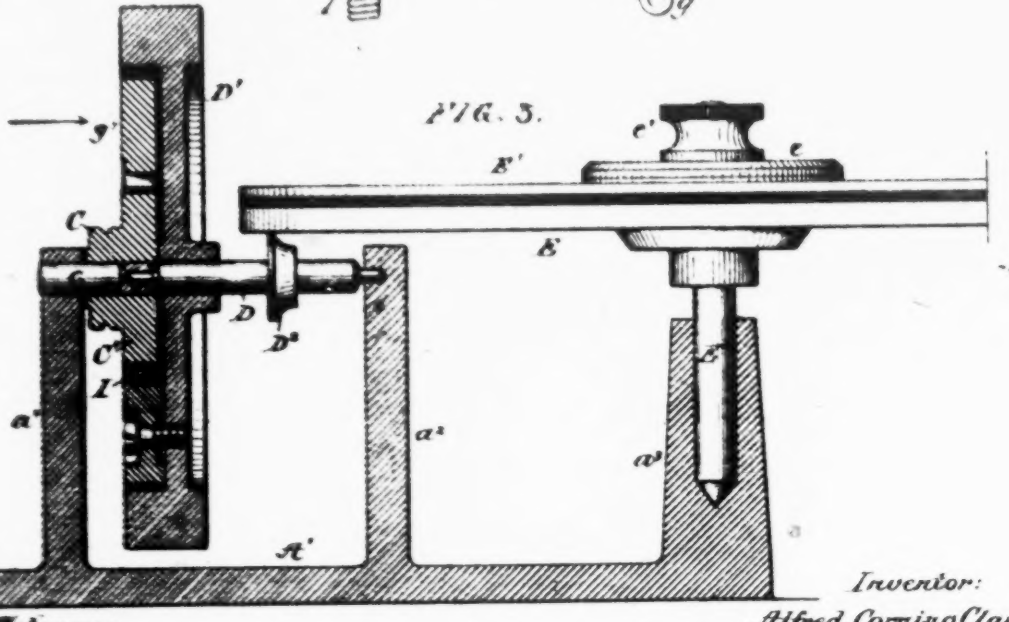

Witnesses:
Charles De Camp
Murray & Boyce

Inventor:
Alfred Corning Clark
by his Attorneys,
Howson & Howson

ALFRED CORNING CLARK, OF NEW YORK, N. Y., ASSIGNOR TO THE UNITED STATES GRAMOPHONE COMPANY, OF WASHINGTON, DISTRICT OF COLUMBIA.

GRAMOPHONE.

SPECIFICATION forming part of Letters Patent No. 597,875, dated January 25, 1898.

Application filed December 4, 1896. Serial No. 614,487. (No model.)

To all whom it may concern:

Be it known that I, ALFRED CORNING CLARK, a citizen of the United States, and a resident of New York city, New York, have invented certain Improvements in Gramophones, of which the following is a specification.

The object of my invention is to regulate the speed of the record-tablet of a gramophone in such a manner that uneven turning of the driving mechanism will not affect the tablet, so that the instrument will reproduce in an even tone the sounds recorded on the tablet. This object I attain in the following manner, reference being had to the accompanying drawings, in which—

Figure 1 is a side view of a gramophone, illustrating my invention. Fig. 2 is a plan view. Fig. 3 is a sectional view on the line 3 3, Fig. 2. Fig. 4 is a view of the fly-wheel, looking in the direction of the arrow, Fig. 3. Fig. 5 is a perspective view of the fly-wheel, and Fig. 6 is a view of a modification of the brake.

My invention is shown in connection with a gramophone for which Letters Patent were granted to Emile Berliner on February 19, 1895, No. 534,543.

A is the base of the machine, on which is mounted the bearing *a* for the driving-wheel B, which has a crank-handle *b* to be grasped by the operator. This driving-wheel is grooved for the reception of a driving-band *b'*, which passes around a small grooved pulley C, having a friction-disk C'. This pulley is mounted loosely on a stud *c*, secured to a post *a'*, projecting from a plate A', mounted on the base A.

D is a shaft having reduced journals, one journal being adapted to an opening in the end of the stud *c*, while the opposite journal is adapted to a post a^2, projecting from the plate A', Fig. 3.

Secured to the shaft D is a fly-wheel D', and also on this shaft is the friction-wheel D^2, which is in frictional contact with the revolving table E, on which is mounted the record-tablet E'. The table is mounted on a vertical shaft E^2, adapted to a deep bearing in the standard a^3, which projects from the plate A'. The record-tablet is clamped to the table in the ordinary manner by the washer *e* and nut *e'*.

Pivoted at *g* to the face of the fly-wheel D' is an arm G, preferably provided with a weight *g'*. To the end of this arm is attached a spring I. The opposite end of this spring is attached to an arm H, secured to the face of the fly-wheel by a clamp-screw *h*. The head of this arm also acts as the counterbalance-weight for the arm G. I preferably recess the arm G at g^2 and stretch across the space friction material, such as leather, which will rest upon the friction-disk of the driven pulley C; but the arm may be made, as shown in Fig. 6, with simply a piece of rubber or felt substituted for the friction-piece *i*. The arm H is so set and the tension of the spring is such that the arm G will, owing to the centrifugal force, move away from the disk and thus break the connection between the fly-wheel and the driving-wheel, so that no matter how irregular the operator turns the driving-wheel the speed of the fly-wheel and the table will always remain the same, providing there is sufficient speed in the first instance to give the proper results.

It is impossible for any one to evenly drive the machine with a small driving-wheel and crank-handle, which is necessary to produce the best results. The record is placed upon the tablet when it is driven at a regular speed, and if the speed of the machine in reproducing is increased or diminished the sound-waves will vary to such an extent that the reproduction will be very imperfect, and in a machine of this character means must be provided whereby any one who undertakes to turn the driving-wheel will reproduce the recorded sounds in the best possible manner. This I accomplish by placing between the driving mechanism and the table mechanism which will govern the rotation of the table.

It will be understood that the mechanism shown may be modified without departing from my invention, and it may be placed in a different position; but the governing mechanism must be between the driving mechanism and the driven table or tablet, so that the speed of the tablet will not be affected by the uneven turning of the driving mechanism.

I claim as my invention—

1. The combination in a gramophone, of the driving mechanism, a rotatable table on which the record-tablet is mounted, a driven shaft, a flanged fly-wheel thereon, a driven

wheel extending within the flange of the fly-wheel and a governor mounted on the fly-wheel within the flange and resting upon an extension of the driven wheel, substantially as described.

2. The combination in a gramophone, of the handled driving-wheel, a pulley driven thereby, said pulley having an extension in the form of a friction-disk, a fly-wheel, a weighted arm pivoted to the side of the fly-wheel and adapted to rest upon the periphery of the friction-disk, a spring tending to draw the arm toward the friction-disk and a table for the record-tablet driven by the fly-wheel, substantially as described.

3. The combination of the driving mechanism consisting of a rotated disk, a driven element through which the tablet-table is rotated, a pivoted arm on said element having a cut-away portion and a strap extending across the cut-away portion adapted to rest upon the surface of the driving element, substantially as described.

4. The combination of the driving element consisting of a disk, a driven element, the rotated tablet-table connected to the driven element, a pivoted arm having a friction-surface adapted to rest upon the driving element, a pivoted arm attached to the driven element, a spring extending from one arm to the other and means for locking the said arm in the adjusted position, substantially as described.

In testimony whereof I have signed my name to this specification in the presence of two subscribing witnesses.

ALFRED CORNING CLARK.

Witnesses:
HENRY HOWSON,
WILL. A. BARR.

912

(No Model.)

J. W. JONES.

GRAMOPHONE NEEDLE.

No. 602,453. Patented Apr. 19, 1898.

FIG. 4.

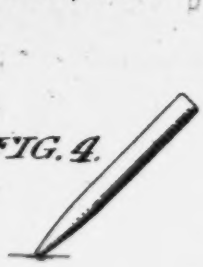

FIG. 1.

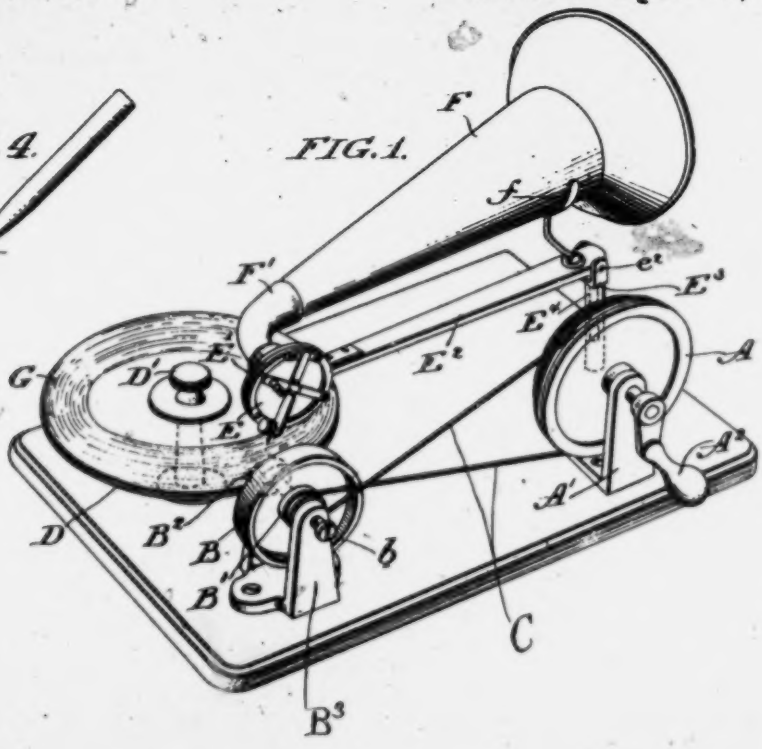

FIG. 2.

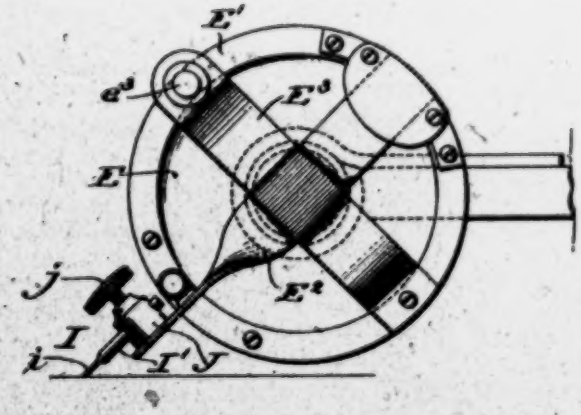

FIG. 3.

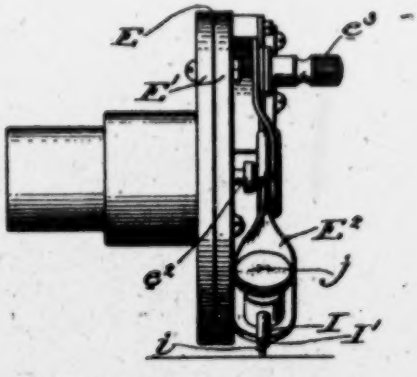

FIG. 5.

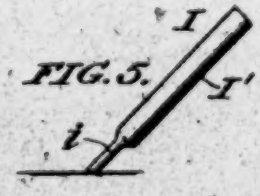

FIG. 6.

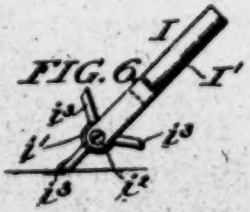

WITNESSES:

Henry Drury

INVENTOR

Joseph W. Jones
by his Attorney

UNITED STATES PATENT OFFICE.

JOSEPH WILLIAM JONES, OF PHILADELPHIA, PENNSYLVANIA, ASSIGNOR TO HIMSELF AND JOSEPH A. VINCENT, OF SAME PLACE.

GRAMOPHONE-NEEDLE.

SPECIFICATION forming part of Letters Patent No. 602,453, dated April 19, 1898.

Application filed February 9, 1897. Serial No. 622,698. (No model.)

To all whom it may concern:

Be it known that I, JOSEPH WILLIAM JONES, a citizen of the United States, residing at Philadelphia, in the county of Philadelphia and State of Pennsylvania, have invented certain new and useful Improvements in Gramophone-Needles; and I do declare the following to be a full, clear, and exact description of the invention, such as will enable others skilled in the art to which it appertains to make and use the same.

My invention relates to improvements in needles for gramophones, the object being to produce a needle having a point or end of reduced but uniform diameter, so that it will adjust itself as the point wears away by use to the spiral groove in the disk containing the record without changing the vibration or sound produced by the instrument.

In the accompanying drawings, Figure 1 illustrates a perspective view of a gramophone of the usual construction, showing the manner in which the stylus or needle is brought into action with the disk containing the record. Fig. 2 illustrates a detached side elevation, enlarged, of the diaphragm and casing, showing the manner of adjusting the stylus or needle to the spring-plate controlling the diaphragm. Fig. 3 is an end view of that portion of the machine shown in Fig. 2. Fig. 4 illustrates a side elevation of the stylus or needle commonly employed in gramophones. Fig. 5 represents a side elevation of a stylus or needle embodying my improvements, and Fig. 6 is a similar view showing a somewhat modified form of my invention.

Referring to the letters of reference in the accompanying drawings, A designates the driving-pulley, mounted upon a shaft, which is supported by a bracket A′, the shaft and pulley being operated by a crank A^2.

B is a balance-wheel provided with a grooved hub B′ for the reception of the elastic cord C, and B^2 is a friction-wheel which bears upon the under side of the disk D for the purpose of rotating the same. The balance-wheel B and friction-wheel B^2 are mounted upon a shaft supported by the bracket B^3. The latter is provided with a set-screw *b* for adjusting the shaft mounted upon a bar E^2, hinged at a point e^2 to a bracket E^3, which is pivotally mounted in an upright E^4, so that a universal movement is given to the said bar.

The horn F is supported at one end from the bracket E^2 by a rest *f* and at the opposite end by an elbow F′, connected to the diaphragm-casing. Upon the support D is detachably secured, by means of a screw-cap D′, a disk G, preferably formed of rubber, containing the record in the form of an irregular helical groove or channel, which is traversed by the stylus or needle I as the disk rotates.

The diaphragm E is acted upon by a spring-arm E^2 through the medium of a pin e^2, and a plate-spring E^3 bears upon the said arm, the tension imparted thereto being regulated by a thumb-nut e^3. The end of the arm E^2 is provided with a binding-post J, adapted to receive the stylus or needle I, which is firmly held in the binding-post J by a screw *j*.

I find in practice that after the needle has passed over the record several times the point is worn away, and where an ordinary needle is employed, such as I have illustrated in Fig. 4, the worn point presents a greater surface to the spiral groove in the record and the sound-vibrations become low and indistinct, so that in order to produce the proper volume and quality of sound the worn needle must be removed after several reproductions of the record and a new one substituted, which requires the operator to keep a supply of pointed needles constantly on hand.

In carrying out my invention I provide a needle I with a stout shank I′, which is essential in preventing the absorption of the delicate vibrations in passing from the point of the needle to the diaphragm, and a point *i*, having a uniform diameter approximately the width of the spiral groove in the record. The extreme end, which is brought in contact with said groove, is beveled at the required angle, so that as the needle is worn away the same amount of surface traverses the record and the sound waves or vibrations are rendered clear and distinct and the same volume and quality of tone is preserved.

In the modified form of the

(No Model.)

J. W. JONES.

GRAMOPHONE NEEDLE.

No. 602,453. Patented Apr. 19, 1898.

FIG. 4.

FIG. 1.

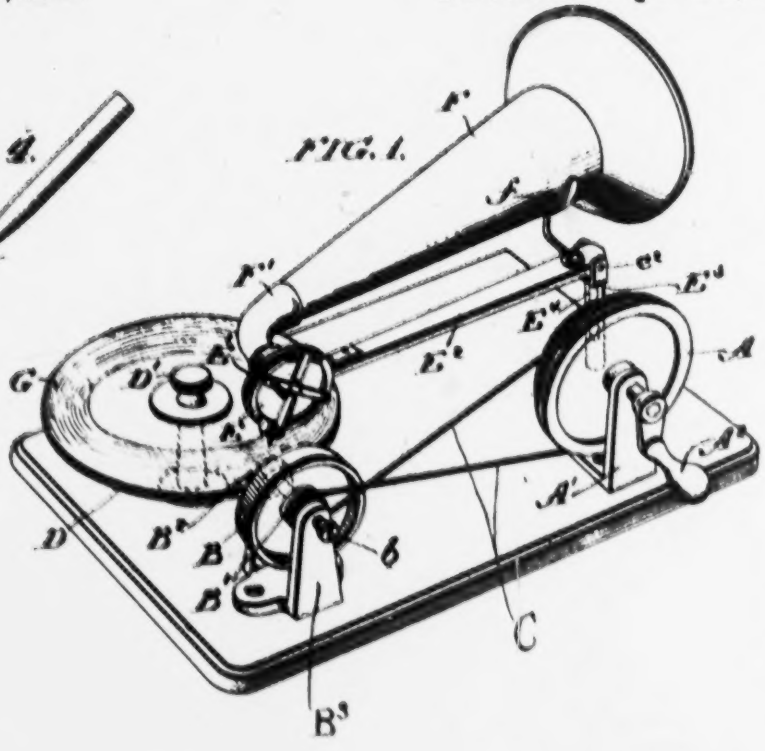

FIG. 2.

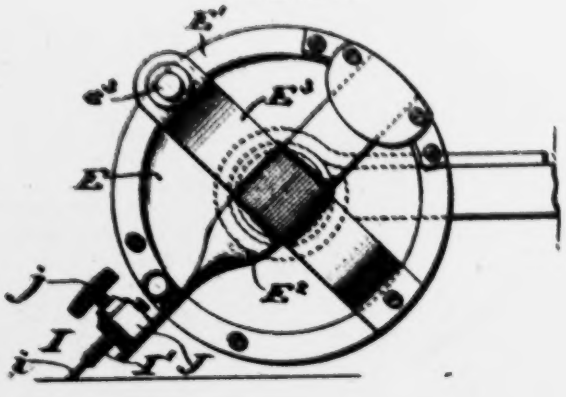

FIG. 3.

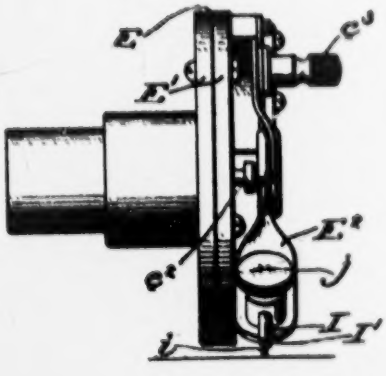

FIG. 5.

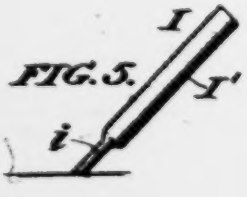

FIG. 6.

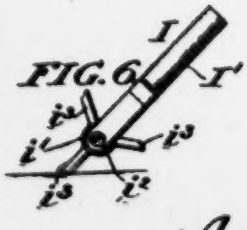

WITNESSES:

Henry Dewey

J. H. Stevens

INVENTOR

Joseph W. Jones

by his Attorney

Geo. P. Williamson

UNITED STATES PATENT OFFICE.

JOSEPH WILLIAM JONES, OF PHILADELPHIA, PENNSYLVANIA, ASSIGNOR TO HIMSELF AND JOSEPH A. VINCENT, OF SAME PLACE.

GRAMOPHONE-NEEDLE.

SPECIFICATION forming part of Letters Patent No. 602,458, dated April 19, 1898.

Application filed February 9, 1897. Serial No. 622,698. (No model.)

To all whom it may concern:

Be it known that I, JOSEPH WILLIAM JONES, a citizen of the United States, residing at Philadelphia, in the county of Philadelphia and State of Pennsylvania, have invented certain new and useful Improvements in Gramophone-Needles; and I do declare the following to be a full, clear, and exact description of the invention, such as will enable others skilled in the art to which it appertains to make and use the same.

My invention relates to improvements in needles for gramophones, the object being to produce a needle having a point or end of reduced but uniform diameter, so that it will adjust itself as the point wears away by use to the spiral groove in the disk containing the record without changing the vibration or sound produced by the instrument.

In the accompanying drawings, Figure 1 illustrates a perspective view of a gramophone of the usual construction, showing the manner in which the stylus or needle is brought into action with the disk containing the record. Fig. 2 illustrates a detached side elevation, enlarged, of the diaphragm and casing, showing the manner of adjusting the stylus or needle to the spring-plate controlling the diaphragm. Fig. 3 is an end view of that portion of the machine shown in Fig. 2. Fig. 4 illustrates a side elevation of the stylus or needle commonly employed in gramophones. Fig. 5 represents a side elevation of a stylus or needle embodying my improvements, and Fig. 6 is a similar view showing a somewhat modified form of my invention.

Referring to the letters of reference in the accompanying drawings, A designates the driving-pulley, mounted upon a shaft, which is supported by a bracket A', the shaft and pulley being operated by a crank A^2.

B is a balance-wheel provided with a grooved hub B' for the reception of the elastic cord C, and B^2 is a friction-wheel which bears upon the under side of the disk D for the purpose of rotating the same. The balance-wheel B and friction-wheel B^2 are mounted upon a shaft supported by the bracket B^3. The latter is provided with a set-screw *b* for adjusting the shaft.

The diaphragm E and its casing E' are mounted upon a bar E^3, hinged at a point e^2 to a bracket E^5, which is pivotally mounted in an upright E^4, so that a universal movement is given to the said bar.

The horn F is supported at one end from the bracket E^3 by a rest *f* and at the opposite end by an elbow F', connected to the diaphragm-casing. Upon the support D is detachably secured, by means of a screw-cap D', a disk G, preferably formed of rubber, containing the record in the form of an irregular helical groove or channel, which is traversed by the stylus or needle I as the disk rotates.

The diaphragm E is acted upon by a spring-arm E^2 through the medium of a pin e^3, and a plate-spring E^7 bears upon the said arm, the tension imparted thereto being regulated by a thumb-nut e^4. The end of the arm E^2 is provided with a binding-post J, adapted to receive the stylus or needle I, which is firmly held in the binding-post J by a screw *j*.

I find in practice that after the needle has passed over the record several times the point is worn away, and where an ordinary needle is employed, such as I have illustrated in Fig. 4, the worn point presents a greater surface to the spiral groove in the record and the sound-vibrations become low and indistinct, so that in order to produce the proper volume and quality of sound the worn needle must be removed after several reproductions of the record and a new one substituted, which requires the operator to keep a supply of pointed needles constantly on hand.

In carrying out my invention I provide a needle I with a stout shank I', which is essential in preventing the absorption of the delicate vibrations in passing from the point of the needle to the diaphragm, and a point *i*, having a uniform diameter approximately the width of the spiral groove in the record. The extreme end, which is brought in contact with said groove, is beveled at the required angle, so that as the needle is worn away the same amount of surface traverses the record and the sound waves or vibrations are rendered clear and distinct and the same volume and quality of tone is preserved.

In the modified form of my invention, shown in Fig. 6 the same general principle is carried out; but in order to impart to

the needle-point a still greater working capacity I provide the shank I' with a hub i', which is fastened to the shank by a screw i^2. Upon said hub are arranged a number of points i^3, so that as one of the points becomes worn a new point may be brought into action by turning the hub i' without removing the shank of the needle from the binding-post.

Having now described my invention, what I claim, and desire to secure by Letters Patent, is—

1. A gramophone-needle having its working end reduced, said end being of the same diameter throughout its length, the same being adapted to the groove of the record.

2. A gramophone-needle having its working end reduced, said end being of the same diameter throughout its length and beveled at the point, the same being adapted to the groove of the record.

3. A gramophone-needle comprising a shank having one or more reduced ends of the same diameter throughout their length, the same being adapted to the groove of the record.

4. A gramophone-needle comprising a shank, I', a hub, i', pivotally secured thereto, provided with a plurality of points, said points being of the same diameter throughout their length the same being adapted to the groove of the record.

In testimony whereof I affix my signature in presence of two witnesses.

JOSEPH WILLIAM JONES.

Witnesses:
J. A. VINCENT,
WILLIAM C. STOEVER.

916

(No Model.) 2 Sheets—Sheet 1.

J. W. JONES.

SOUND REPRODUCING MACHINE.

No. 605,484. Patented June 14, 1898.

FIG. 1.

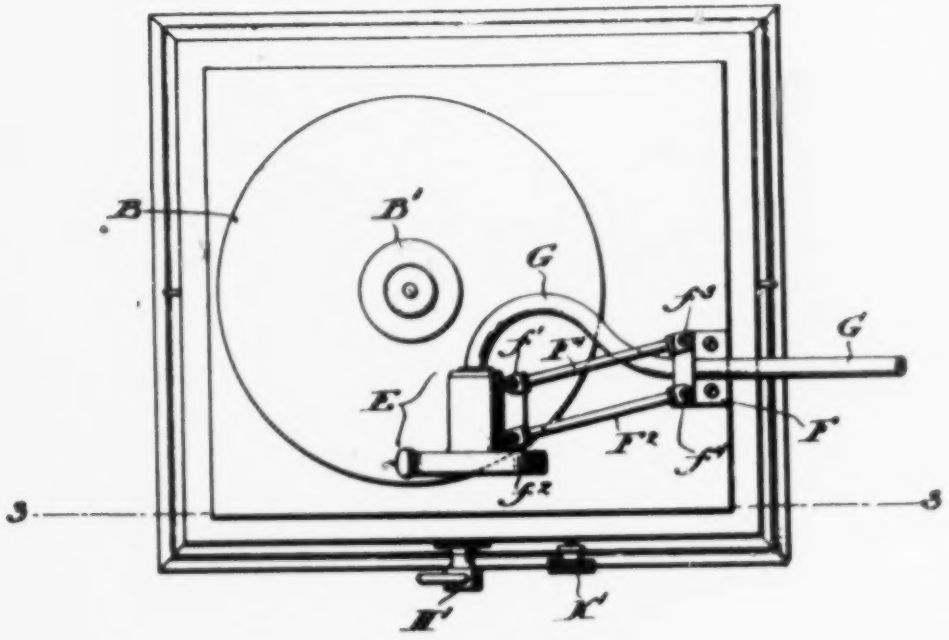

FIG. 2.

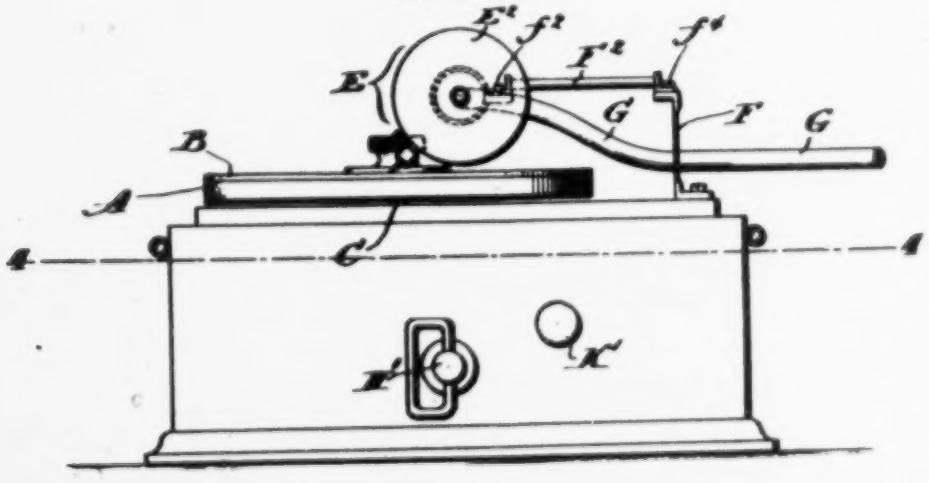

WITNESSES:

INVENTOR

Joseph W. Jones

J. W. JONES.

SOUND REPRODUCING MACHINE.

No. 605,484. Patented June 14, 1898.

FIG. 1.

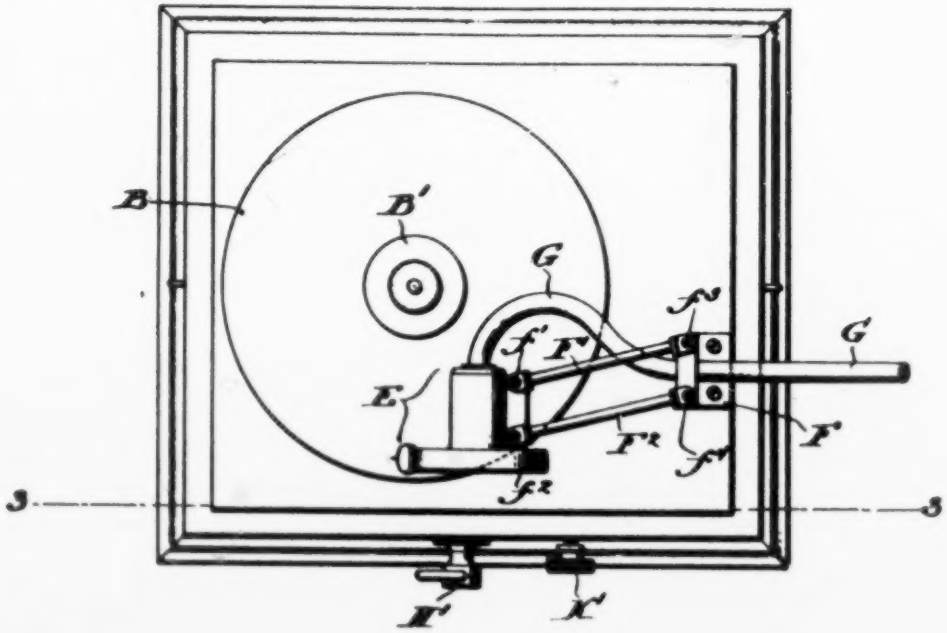

FIG. 2.

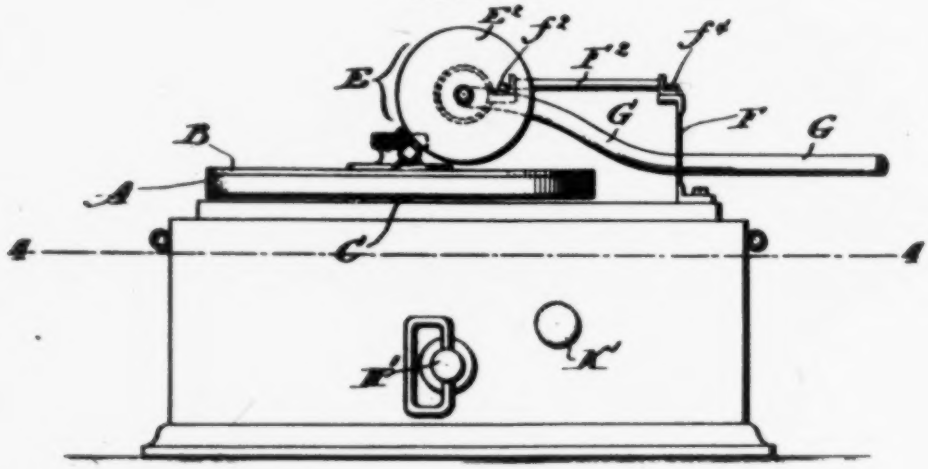

WITNESSES:

J. H. Vincent

James E. Oliver.

INVENTOR

Joseph W. Jones

by his Attorney

David S. Williams

(No Model.) 2 Sheets—Sheet 2.

J. W. JONES.

SOUND REPRODUCING MACHINE.

No. 605,484. Patented June 14, 1898.

FIG. 3.

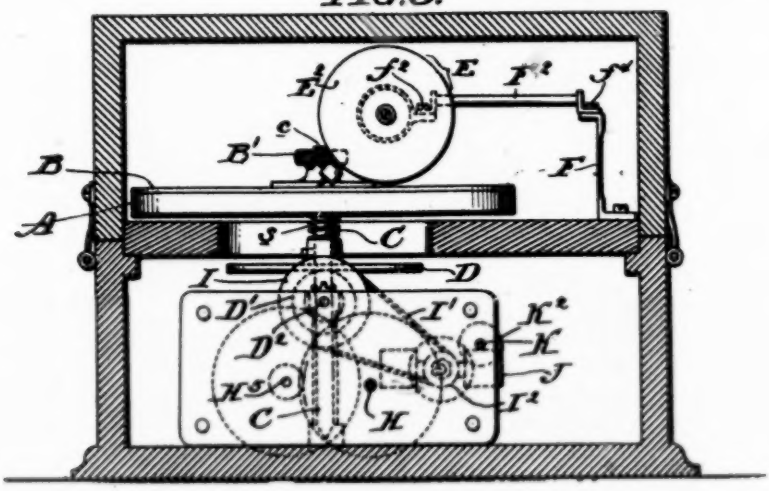

FIG. 5.

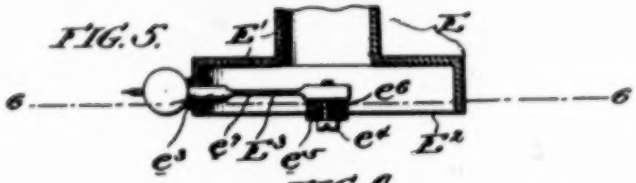

FIG. 4.

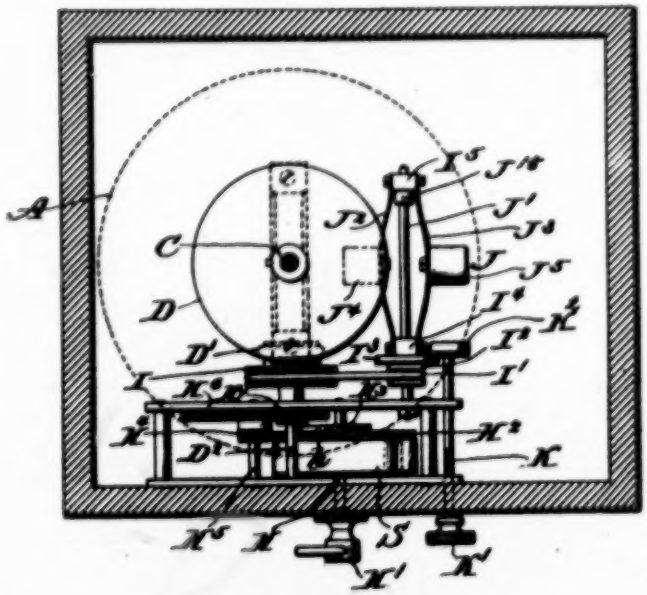

FIG. 6.

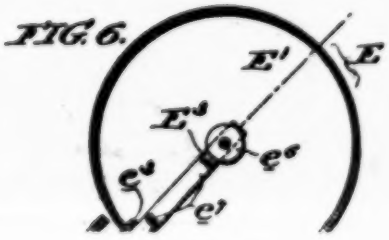

WITNESSES:

INVENTOR

Joseph W. Jones

by his Attorney

UNITED STATES PATENT OFFICE.

JOSEPH W. JONES, OF PHILADELPHIA, PENNSYLVANIA, ASSIGNOR TO HIMSELF AND JOSEPH A. VINCENT, OF SAME PLACE.

SOUND-REPRODUCING MACHINE.

SPECIFICATION forming part of Letters Patent No. 605,484, dated June 14, 1898.

Application filed May 13, 1897. Serial No. 636,294. (No model.)

To all whom it may concern:

Be it known that I, JOSEPH W. JONES, a citizen of the United States, residing at Philadelphia, in the county of Philadelphia and State of Pennsylvania, have invented certain new and useful Improvements in Sound-Reproducing Machines; and I do declare the following to be a full, clear, and exact description of the invention, such as will enable others skilled in the art to which it appertains to make and use the same.

My invention relates to improvements in sound-reproducing machines, more particularly that class known as "gramophones," in which the sound-record employed consists of an irregular groove of even depth formed upon a flat disk, the stylus controlling the diaphragm being fed along by resting in and following the helical groove as the disk is being rotated.

My aim is to construct a simple and inexpensive toy machine which will embody all the quality of tone of a more expensive and elaborate machine and to overcome certain defects which I find to exist in the more expensive forms of gramophones and which are greatly magnified as the size of the instrument is reduced.

The main features embodied in my improvements are, first, the construction and arrangement of the sound-box, diaphragm, and stylus; second, means for guiding the sound-box and stylus and regulating the tension of the stylus-point upon the record; third, means for governing the speed of the motor operating the machine, and, fourth, in the general construction and arrangement of the parts, which will be more fully treated of hereinafter.

Referring to the accompanying drawings, Figure 1 illustrates a plan view of a gramophone embodying my improvements, the top cover of the instrument being removed. Fig. 2 is a side elevation of what is shown in Fig. 1. Fig. 3 is a vertical sectional view taken on the line 3 3 of Fig. 1. Fig. 4 is a horizontal sectional view on the line 4 4 of Fig. 2. Fig. 5 is a horizontal sectional view of the sound-box detached and enlarged, and Fig. 6 is a vertical section of the sound-box on the

Referring to the letters of reference marked upon the drawings, A indicates a circular table upon which the record-disk B is placed and firmly held in place by a thumb-screw B', which is threaded to engage a projecting portion *c* of the vertical shaft C, which supports said table. The table A not only acts as a support for the record-disk B, but is made of sufficient weight and thickness to act as a balance or fly wheel to more readily act in conjunction with the governor to regulate the speed of the machine.

Suitably guided upon the shaft C, below the table A, is a disk D, acted upon by a spring S, said disk being operated upon by a friction-wheel D', mounted upon the shaft D^2, which is driven by spring means, more fully described hereinafter.

Not the least important feature of my invention is the sound-box E, which comprises the shell or casing E', to which is secured by soldering or brazing the diaphragm E^2. A lever E^3 passes through the rim of the sound-box and is cushioned to prevent the rasping and grating sounds commonly heard in talking-machines, caused by metallic working surfaces coming together in the working portion of the sound-box. To overcome this defect, I surround the lever E^3 at its point of fulcrum with a ring or cushion e^3 of rubber, which permits of a slight universal movement. The lever E^3 is joined at one end to the diaphragm E^2 by a screw e^4, which is separated from the diaphragm, and in like manner the diaphragm is separated from the lever E^3 by cushions e^5 and e^6. I further desire to destroy harsh and grating sounds caused by minute irregularities in the true sound-waves, which I accomplish by reducing the thickness of the bar E^3 at a point e^7, thus allowing the bar to move the reduced portion e^7, which acts as a spring to take up the delicate movements caused by the irregularities above referred to.

One of the important features of my invention is the means employed to guide the sound-box and stylus across the face of the record-disk, so that the stylus will at all times assume the same relative position in the record-

J. W. JONES.

SOUND REPRODUCING MACHINE.

No. 605,484. Patented June 14, 1898.

FIG. 3.

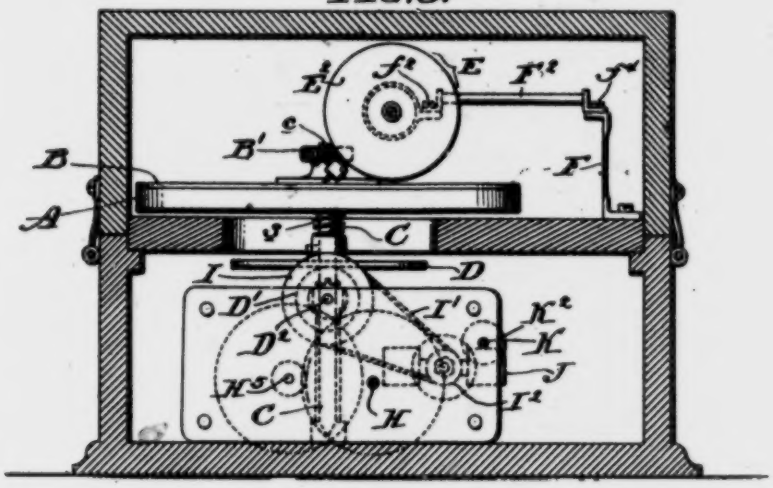

FIG. 5.

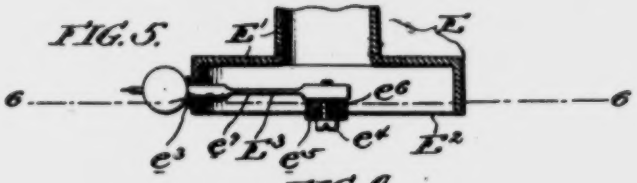

FIG. 4.

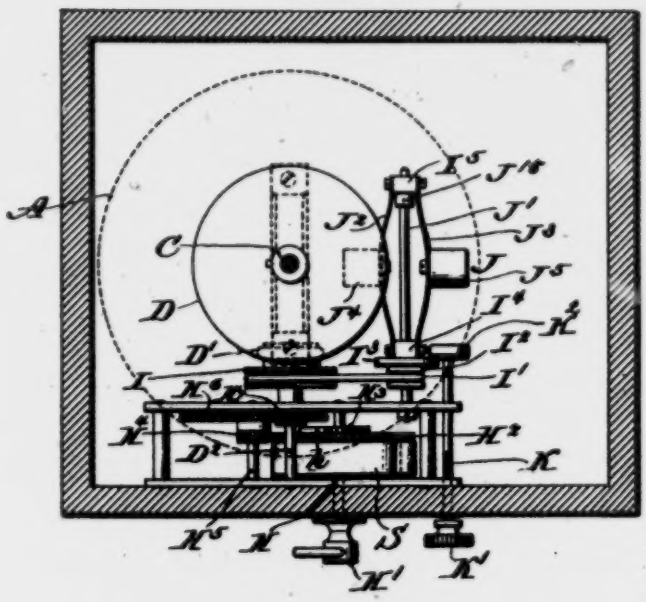

FIG. 6.

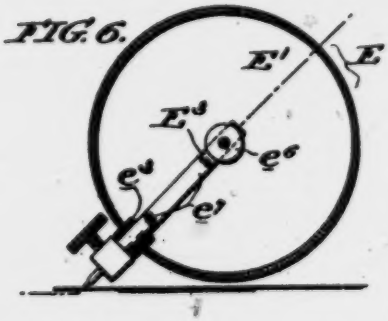

WITNESSES:

James E. Hewes.

INVENTOR

Joseph W. Jones

by his Attorney

UNITED STATES PATENT OFFICE.

JOSEPH W. JONES, OF PHILADELPHIA, PENNSYLVANIA, ASSIGNOR TO HIMSELF AND JOSEPH A. VINCENT, OF SAME PLACE.

SOUND-REPRODUCING MACHINE.

SPECIFICATION forming part of Letters Patent No. 605,484, dated June 14, 1898.

Application filed May 13, 1897. Serial No. 636,294. (No model.)

To all whom it may concern:

Be it known that I, JOSEPH W. JONES, a citizen of the United States, residing at Philadelphia, in the county of Philadelphia and State of Pennsylvania, have invented certain new and useful Improvements in Sound-Reproducing Machines; and I do declare the following to be a full, clear, and exact description of the invention, such as will enable others skilled in the art to which it appertains to make and use the same.

My invention relates to improvements in sound-reproducing machines, more particularly that class known as "gramophones," in which the sound-record employed consists of an irregular groove of even depth formed upon a flat disk, the stylus controlling the diaphragm being fed along by resting in and following the helical groove as the disk is being rotated.

My aim is to construct a simple and inexpensive toy machine which will embody all the quality of tone of a more expensive and elaborate machine and to overcome certain defects which I find to exist in the more expensive forms of gramophones and which are greatly magnified as the size of the instrument is reduced.

The main features embodied in my improvements are, first, the construction and arrangement of the sound-box, diaphragm, and stylus; second, means for guiding the sound-box and stylus and regulating the tension of the stylus-point upon the record; third, means for governing the speed of the motor operating the machine, and, fourth, in the general construction and arrangement of the parts, which will be more fully treated of hereinafter.

Referring to the accompanying drawings, Figure 1 illustrates a plan view of a gramophone embodying my improvements, the top cover of the instrument being removed. Fig. 2 is a side elevation of what is shown in Fig. 1. Fig. 3 is a vertical sectional view taken on the line 3 3 of Fig. 1. Fig. 4 is a horizontal sectional view on the line 4 4 of Fig. 2. Fig. 5 is a horizontal sectional view of the sound-box detached and enlarged, and Fig. 6 is a vertical section of the sound-box on the line 6 6 of Fig. 5.

Referring to the letters of reference marked upon the drawings, A indicates a circular table upon which the record-disk B is placed and firmly held in place by a thumb-screw B', which is threaded to engage a projecting portion *c* of the vertical shaft C, which supports said table. The table A not only acts as a support for the record-disk B, but is made of sufficient weight and thickness to act as a balance or fly wheel to more readily act in conjunction with the governor to regulate the speed of the machine.

Suitably guided upon the shaft C, below the table A, is a disk D, acted upon by a spring S, said disk being operated upon by a friction-wheel D', mounted upon the shaft D^2, which is driven by spring means, more fully described hereinafter.

Not the least important feature of my invention is the sound-box E, which comprises the shell or casing E', to which is secured by soldering or brazing the diaphragm E^2. A lever E^3 passes through the rim of the sound-box and is cushioned to prevent the rasping and grating sounds commonly heard in talking-machines, caused by metallic working surfaces coming together in the working portion of the sound-box. To overcome this defect, I surround the lever E^3 at its point of fulcrum with a ring or cushion e^3 of rubber, which permits of a slight universal movement. The lever E^3 is joined at one end to the diaphragm E^2 by a screw e^4, which is separated from the diaphragm, and in like manner the diaphragm is separated from the lever E^3 by cushions e^5 and e^6. I further desire to destroy harsh and grating sounds caused by minute irregularities in the true sound-waves, which I accomplish by reducing the thickness of the bar E^3 at a point e^7, thus allowing the bar to move the reduced portion e^7 as a spring to take up the delicate movements caused by the irregularities above referred to.

One of the important features of my invention is the means employed to guide the sound-box and stylus across the face of the record-disk, so that the stylus will at all times assume the same relative position in the record-groove, and the sound-box will move in a plane parallel to a horizontal line drawn

across the face of the record-disk. By this arrangement I reduce the tendency of the stylus to leave the groove of the record, which frequently occurs where a short arm is employed, causing the sound-box and stylus to assume a radial position in respect to the point of fulcrum. The tone of the instrument is greatly improved by this means of guiding the sound-box and the life of the record is greatly prolonged.

The sound-box E is connected to the bracket F by the parallel rods F' and F^2, which are hinged to the sound-box by screws f' and f^2 and to the bracket F by the screws f^3 and f^4. By the use of these short parallel rods I find that the stylus, which is caused to assume the same plane with respect to the record, imparts with greater force and more accuracy the sound-waves of the record, the great weight of the long arm commonly employed is overcome, and the whole construction is made more compact. The bracket F in addition to acting as a support for parallel rods F' and F^2 also imparts a spring-tension to the sound-box and stylus and causes the latter to bear with a yielding tension against the record-disk.

As shown in Figs. 1 and 2, the sound is conveyed from the sound-box E by a tube G, which is guided by an opening in the bracket F.

The motor for rotating the table A comprises a winding-shaft H, provided with a key H', a spring S, the inner end of which is secured to said shaft, while the outer end is secured to the framework of the motor. The gear-wheel H^3 is hung loosely upon the shaft H and is provided with a pawl h, which engages the teeth of a ratchet-wheel H^3, which is firmly secured to the shaft H. The gear H^3 meshes with a pinion H^4 upon a shaft H^5, which carries a gear-wheel H^6, the same meshing with a pinion H' upon the shaft D^2.

Secured to the shaft D^2 is a grooved pulley I, provided with an elastic belt I', which imparts motion to a pulley I^2, controlling the governor.

The governor J consists of a fixed shaft J', secured to the framework of the motor. The pulley I^2 is united to or has formed therewith a disk I' and a hub I^4. The springs J^2 and J^3 of the governor are provided with weights J^4 and J^5, which are secured at their ends to the hubs I^4 and I', which rotate, together with said springs, upon the fixed shaft J', a collar J^6 upon said shaft serving to hold the hub I^5 in position against the action of said springs.

From the above description it will be readily seen that as the governor rotates the pulley I^2, disk I', and hub I^4 will travel back and forth upon the shaft J' as the speed varies. In order to control the speed of the machine, I provide an adjustment in the form of a threaded rod K, which is provided at one end with

the speed of the machine by frictional contact.

Having now described my invention, what I claim, and desire to secure by Letters Patent, is—

1. A sound-reproducing machine comprising a rotatable table, a record thereon, spring means for rotating said table, a sound-box provided with a diaphragm and stylus, a bracket secured to the framework of the machine and short parallel rods pivoted to said bracket and to the sound-box, substantially as specified.

2. A sound-reproducing machine comprising a rotatable table, a record-disk detachably secured thereto, spring means for rotating said table, a sound-box provided with a diaphragm, and stylus, the latter having a bar interposed between the diaphragm and sound-box provided with an annular cushion supported by the rim of the sound-box, and cushions at the point where the bar is united to the diaphragm, a bracket connected to the framework of the machine, parallel rods pivoted to said bracket and to a projecting ledge upon the sound-box, substantially as specified.

3. A sound-reproducing machine comprising a rotatable table, a record detachably secured thereto, spring means for rotating said table, a sound-box provided with a diaphragm and stylus operated upon by the record, a flexible bracket secured to the frame of the machine, two parallel rods each of which is pivoted at opposite ends to the sound-box and flexible bracket, a governor upon the operating mechanism and means independent of the action of the governor for regulating the speed of the mechanism.

4. A sound-reproducing machine comprising a rotatable table mounted upon a vertical shaft, a record-disk detachably secured thereto, a driving-disk feathered to said shaft and held in frictional contact with the driving mechanism by a spring, spring mechanism for operating the driving-disk, a sound-box provided with a diaphragm and stylus operated upon by the record and parallel rods pivoted to the sound-box and to a bracket mounted upon the framework of the machine.

5. A sound-reproducing machine comprising a rotatable table, mounted upon a vertical shaft, a record-disk detachably secured thereto, a driving-disk feathered to said shaft and operated upon by a spring, a pulley for rotating said disk mounted upon a horizontal shaft, rotated by spring mechanism, a governor driven by a flexible belt from said shaft, a disk upon one of the movable parts of said governor, an adjusting-screw having upon one end a disk and pad which is capable of being brought into and out of contact with the disk of the governor for regulating the speed of

and to a bracket mounted upon the framework of the machine.

6. A sound-box for a sound recording or reproducing machine, consisting of a flexible stylus-lever inclosed within the sound-box and fulcrumed to the wall of the same by an annular ring of elastic material, one end of said stylus being connected to the diaphragm through the medium of a screw and cushion, and the opposite end being provided with a detachable stylus.

In testimony whereof I affix my signature in presence of two witnesses.

JOSEPH W. JONES.

Witnesses:
JAMES E. HEWES,
JOHN R. NOLAN.

across the face of the record-disk. By this arrangement I reduce the tendency of the stylus to leave the groove of the record, which frequently occurs where a short arm is employed, causing the sound-box and stylus to assume a radial position in respect to the point of fulcrum. The tone of the instrument is greatly improved by this means of guiding the sound-box and the life of the record is greatly prolonged.

The sound-box E is connected to the bracket F by the parallel rods F' and F^2, which are hinged to the sound-box by screws f' and f^2 and to the bracket F by the screws f^3 and f^4. By the use of these short parallel rods I find that the stylus, which is caused to assume the same plane with respect to the record, imparts with greater force and more accuracy the sound-waves of the record, the great weight of the long arm commonly employed is overcome, and the whole construction is made more compact. The bracket F in addition to acting as a support for parallel rods F' and F^2 also imparts a spring-tension to the sound-box and stylus and causes the latter to bear with a yielding tension against the record-disk.

As shown in Figs. 1 and 2, the sound is conveyed from the sound-box E by a tube G, which is guided by an opening in the bracket F.

The motor for rotating the table A comprises a winding-shaft H, provided with a key H', a spring S, the inner end of which is secured to said shaft, while the outer end is secured to the framework of the motor. The gear-wheel H^2 is hung loosely upon the shaft H and is provided with a pawl h, which engages the teeth of a ratchet-wheel H^3, which is firmly secured to the shaft H. The gear H^2 meshes with a pinion H^4 upon a shaft H^5, which carries a gear-wheel H^6, the same meshing with a pinion H^7 upon the shaft D^2.

Secured to the shaft D^2 is a grooved pulley I, provided with an elastic belt I', which imparts motion to a pulley I^2, controlling the governor.

The governor J consists of a fixed shaft J', secured to the framework of the motor. The pulley I^2 is united to or has formed therewith a disk I^3 and a hub I^4. The springs J^2 and J^3 of the governor are provided with weights J^4 and J^5, which are secured at their ends to the hubs I^4 and I^2, which rotate, together with said springs, upon the fixed shaft J', a collar J^6 upon said shaft serving to hold the hub I^2 in position against the action of said springs.

From the above description it will be readily seen that as the governor rotates the pulley I^2, disk I^3, and hub I^4 will travel back and forth upon the shaft J' as the speed varies. In order to control the speed of the machine, I provide an adjustment in the form of a threaded rod K, which is provided at one end with a thumb-screw K' for turning and adjusting the same. At the other end of the rod I provide a padded disk K^2, which may be brought to bear upon the disk I^3 and thereby limit the speed of the machine by frictional contact.

Having now described my invention, what I claim, and desire to secure by Letters Patent, is—

1. A sound-reproducing machine comprising a rotatable table, a record thereon, spring means for rotating said table, a sound-box provided with a diaphragm and stylus, a bracket secured to the framework of the machine and short parallel rods pivoted to said bracket and to the sound-box, substantially as specified.

2. A sound-reproducing machine comprising a rotatable table, a record-disk detachably secured thereto, spring means for rotating said table, a sound-box provided with a diaphragm, and stylus, the latter having a bar interposed between the diaphragm and sound-box provided with an annular cushion supported by the rim of the sound-box, and cushions at the point where the bar is united to the diaphragm, a bracket connected to the framework of the machine, parallel rods pivoted to said bracket and to a projecting ledge upon the sound-box, substantially as specified.

3. A sound-reproducing machine comprising a rotatable table, a record detachably secured thereto, spring means for rotating said table, a sound-box provided with a diaphragm and stylus operated upon by the record, a flexible bracket secured to the frame of the machine, two parallel rods each of which is pivoted at opposite ends to the sound-box and flexible bracket, a governor upon the operating mechanism and means independent of the action of the governor for regulating the speed of the mechanism.

4. A sound-reproducing machine comprising a rotatable table mounted upon a vertical shaft, a record-disk detachably secured thereto, a driving-disk feathered to said shaft and held in frictional contact with the driving mechanism by a spring, spring mechanism for operating the driving-disk, a sound-box provided with a diaphragm and stylus operated upon by the record and parallel rods pivoted to the sound-box and to a bracket mounted upon the framework of the machine.

5. A sound-reproducing machine comprising a rotatable table, mounted upon a vertical shaft, a record-disk detachably secured thereto, a driving-disk feathered to said shaft and operated upon by a spring, a pulley for rotating said disk mounted upon a horizontal shaft, rotated by spring mechanism, a governor driven by a flexible belt from said shaft, a disk upon one of the movable parts of said governor, an adjusting-screw having upon one end a disk and pad which is capable of being brought into and out of contact with the disk of the governor for regulating the speed of the operating mechanism, a sound-box provided with a diaphragm and stylus, operated upon by the record, and parallel rods for guiding the sound-box, pivoted to the latter

and to a bracket mounted upon the framework of the machine.

6. A sound-box for a sound recording or reproducing machine, consisting of a flexible stylus-lever inclosed within the sound-box and fulcrumed to the wall of the same by an annular ring of elastic material, one end of said stylus being connected to the diaphragm through the medium of a screw and cushion, and the opposite end being provided with a detachable stylus.

In testimony whereof I affix my signature in presence of two witnesses.

JOSEPH W. JONES.

Witnesses:
JAMES E. HEWES,
JOHN R. NOLAN.

924

No. 691,667. Patented Jan. 21, 1902.

H. A. ROWLAND.

SYNCHRONOUS TELEGRAPH SYSTEM.

(Application filed Feb. 24, 1899.)

(No Model.) 2 Sheets—Sheet 1.

FIG. 1.

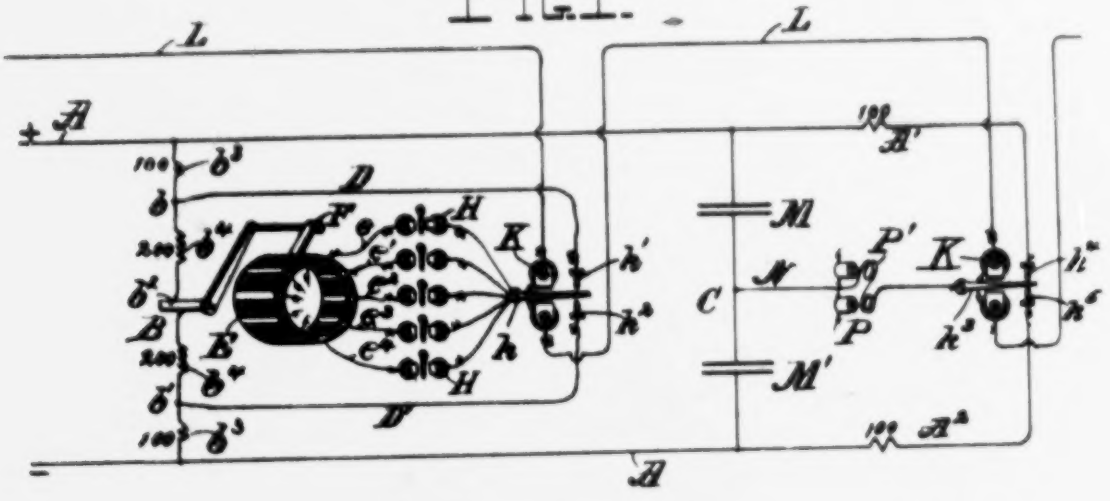

FIG. 2.

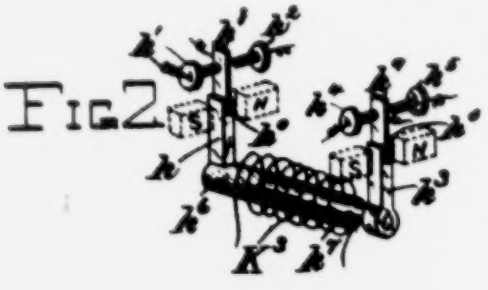

FIG. 3.

FIG. 4.

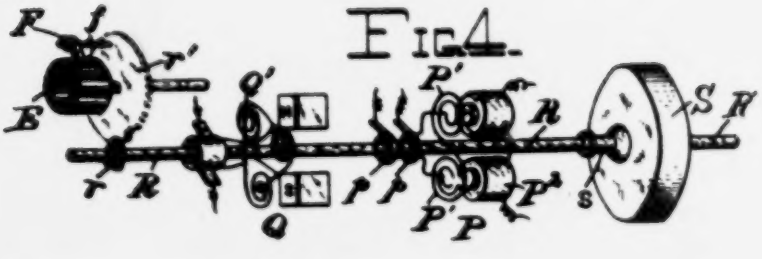

Witnesses
John N. Hall.
J. Stephen Bennett.

Inventor
Henry A. Rowland,
by Wilkinson & Fisher,
Attorneys.

No. 691,667. Patented Jan. 21, 1902.

H. A. ROWLAND.

SYNCHRONOUS TELEGRAPH SYSTEM.

(Application filed Feb. 24, 1899.)

(No Model.) 2 Sheets—Sheet 2.

FIG. 5.

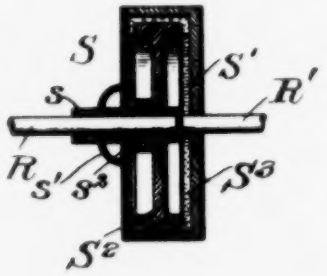

FIG. 6.

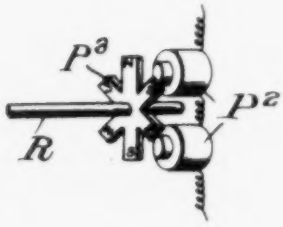

FIG. 7.

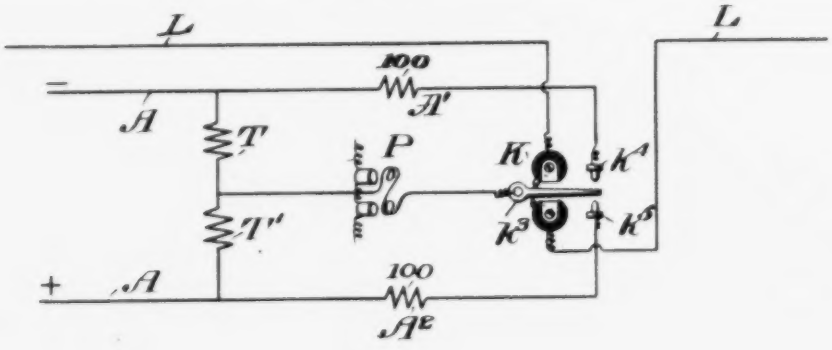

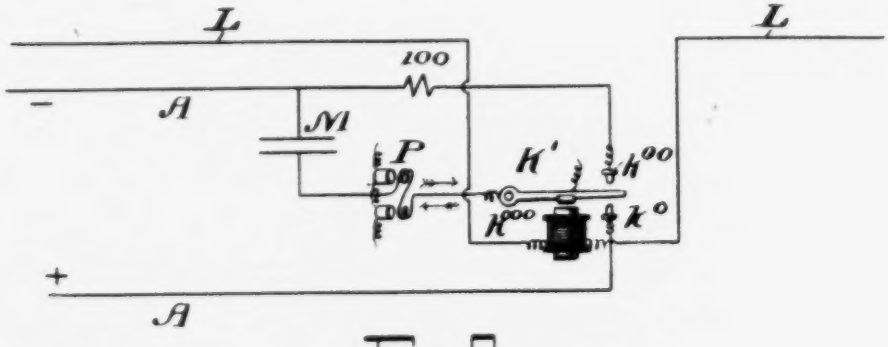

FIG. 8.

Inventor

Henry A. Rowland

Witnesses

Geo. H. Byrne

By Williamson & Fisher

UNITED STATES PATENT OFFICE.

HENRY A. ROWLAND, OF BALTIMORE, MARYLAND, ASSIGNOR TO THE ROWLAND TELEGRAPHIC COMPANY, OF BALTIMORE, MARYLAND, A CORPORATION OF NEW JERSEY.

SYNCHRONOUS TELEGRAPH SYSTEM.

SPECIFICATION forming part of Letters Patent No. 691,667, dated January 21, 1902.

Application filed February 24, 1899. Serial No. 706,729. (No model.)

To all whom it may concern:

Be it known that I, HENRY A. ROWLAND, a citizen of the United States, residing at Baltimore city, in the State of Maryland, have invented certain new and useful Improvements in Synchronous Telegraph Systems, (Case D;) and I do hereby declare the following to be a full, clear, and exact description of the invention, such as will enable others skilled in the art to which it appertains to make and use the same.

This invention relates to improvements in synchronous telegraphy, and more especially to improvements in or relating to means for obtaining synchronous or steady motion and operating local telegraphic apparatus.

According to the system of telegraphy shown and described in my patent applications, Serial No. 589,352, filed April 27, 1896, and issued as Patent No. 622,636, dated April 4, 1899, and Serial No. 646,017, filed July 26, 1897, the current-distributing apparatus, such as local sunflower devices, as well as other apparatus adapted to rotate in synchronism, are regulated by electrically-controlled synchronizing devices, and these synchronizing devices are regulated either by passing the line signaling-current directly through them or by operating them upon a local low-potential circuit relayed from the main-line current—as, for example, a battery-current having its polarity changed by a main-line relay.

It has hitherto also been my practice, according to the applications above referred to, to operate the local selecting-relays either upon a local battery-circuit separate from the synchronizing-circuit in the main line with the synchronizer (a method shown in the Patent No. 622,636) or upon a local relayed battery-circuit.

The present invention, however, does not contemplate the employment entirely of any of the foregoing methods, but is designed rather as an improvement thereon, whereby I am enabled by the use of condensers or resistances, or both, and the proper arrangement

By the invention herein described I can readily use the Edison one-hundred-and-ten-volt circuit where such an arrangement as the connections for changing the polarity of a battery-circuit could not be employed. On a three-wire system, however, the latter method may be used.

This invention comprises also a damper for damping the oscillatory variations from a steady motion, herein shown as operating in conjunction with the synchronizing device and rendering possible a more perfect synchronism. This damper, however, is by no means limited to such specific use, as it may be used in conjunction with almost any piece of rotating mechanism for the purpose of steadying its motion.

This invention, moreover, comprises means for producing synchronous motion by the use of one or more condensers or their equivalents for any purpose for which the said synchronous motion may be used.

My said invention also embodies a special form of line polarized relay, a special arrangement of the synchronizing device proper differing somewhat from that shown in my prior applications, and other improvements hereinafter more particularly described and claimed.

In order to more fully describe my present invention, reference will be had to the accompanying drawings, in which—

Figure 1 is a diagram indicating the arrangement of the circuits and a part of the apparatus embodying my invention. Fig. 2 is a diagrammatic perspective view of my improved line polarized relay. Fig. 3 is a diagram showing one method of connecting the coils of the said relay. Fig. 4 is a diagrammatic perspective view showing the arrangement of the synchronizing device, driving-motor, damper, and selecting-commutator or sunflower device. Fig. 5 represents a central vertical sectional view of one form of the viscous damper. Fig. 6 is a diagram showing a method of operating the synchronizing de-

vice differing from

No. 691,667. Patented Jan. 21, 1902.

H. A. ROWLAND.

SYNCHRONOUS TELEGRAPH SYSTEM.

(Application filed Feb. 24, 1899.)

(No Model.) 2 Sheets—Sheet 2.

FIG. 5.

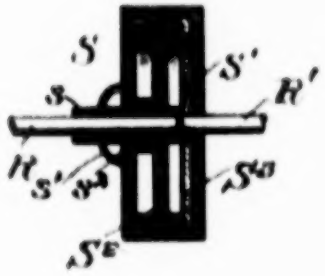

FIG. 6.

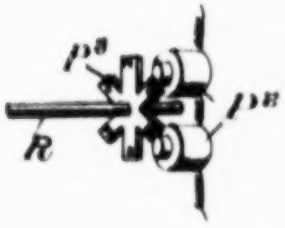

FIG. 7.

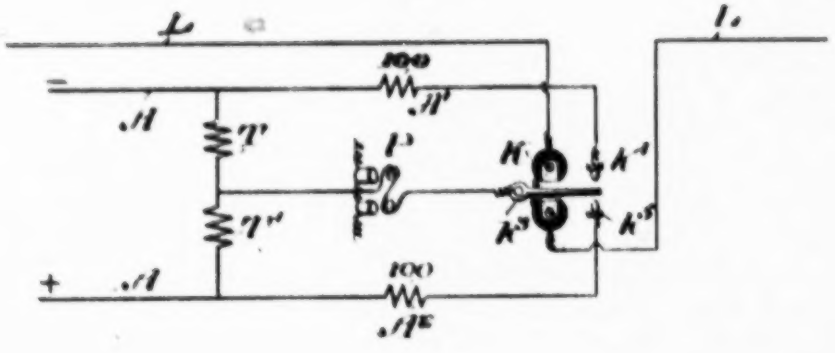

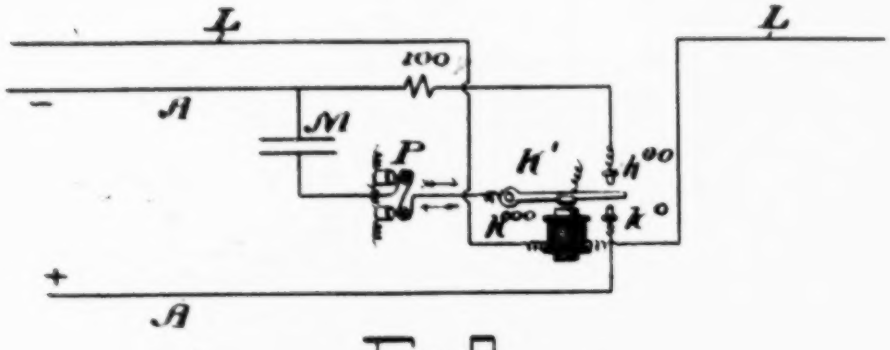

FIG. 8.

Witnesses

Geo. H. Byrne

John H. Hall

Inventor

Henry A. Rowland

By Williamson & Fisher

Attorneys

UNITED STATES PATENT OFFICE.

HENRY A. ROWLAND, OF BALTIMORE, MARYLAND, ASSIGNOR TO THE ROWLAND TELEGRAPHIC COMPANY, OF BALTIMORE, MARYLAND, A CORPORATION OF NEW JERSEY.

SYNCHRONOUS TELEGRAPH SYSTEM.

SPECIFICATION forming part of Letters Patent No. 691,667, dated January 21, 1902.

Application filed February 24, 1899. Serial No. 706,729. (No model.)

To all whom it may concern:

Be it known that I, HENRY A. ROWLAND, a citizen of the United States, residing at Baltimore city, in the State of Maryland, have invented certain new and useful Improvements in Synchronous Telegraph Systems, (Case D;) and I do hereby declare the following to be a full, clear, and exact description of the invention, such as will enable others skilled in the art to which it appertains to make and use the same.

This invention relates to improvements in synchronous telegraphy, and more especially to improvements in or relating to means for obtaining synchronous or steady motion and operating local telegraphic apparatus.

According to the system of telegraphy shown and described in my patent applications, Serial No. 589,352, filed April 27, 1896, and issued as Patent No. 622,636, dated April 4, 1899, and Serial No. 646,017, filed July 26, 1897, the current-distributing apparatus, such as local sunflower devices, as well as other apparatus adapted to rotate in synchronism, are regulated by electrically-controlled synchronizing devices, and these synchronizing devices are regulated either by passing the line signaling-current directly through them or by operating them upon a local low-potential circuit relayed from the main-line current—as, for example, a battery-current having its polarity changed by a main-line relay.

It has hitherto also been my practice, according to the applications above referred to, to operate the local selecting-relays either upon a local battery-circuit separate from the synchronizing-circuit in the main line with the synchronizer (a method shown in the Patent No. 622,636) or upon a local relayed battery-circuit.

The present invention, however, does not contemplate the employment entirely of any of the foregoing methods, but is designed rather as an improvement thereon, whereby I am enabled by the use of condensers or resistances, or both, and the proper arrangement of the local circuits to employ a local dynamo-current of one hundred volts, for example, and use this current for both synchronizing devices and local selecting-relays.

By the invention herein described I can readily use the Edison one-hundred-and-ten-volt circuit where such an arrangement as the connections for changing the polarity of a battery-circuit could not be employed. On a three-wire system, however, the latter method may be used.

This invention comprises also a damper for damping the oscillatory variations from a steady motion, herein shown as operating in conjunction with the synchronizing device and rendering possible a more perfect synchronism. This damper, however, is by no means limited to such specific use, as it may be used in conjunction with almost any piece of rotating mechanism for the purpose of steadying its motion.

This invention, moreover, comprises means for producing synchronous motion by the use of one or more condensers or their equivalents for any purpose for which the said synchronous motion may be used.

My said invention also embodies a special form of line polarized relay, a special arrangement of the synchronizing device proper differing somewhat from that shown in my prior applications, and other improvements hereinafter more particularly described and claimed.

In order to more fully describe my present invention, reference will be had to the accompanying drawings, in which—

Figure 1 is a diagram indicating the arrangement of the circuits and a part of the apparatus embodying my invention. Fig. 2 is a diagrammatic perspective view of my improved line polarized relay. Fig. 3 is a diagram showing one method of connecting the coils of the said relay. Fig. 4 is a diagrammatic perspective view showing the arrangement of the synchronizing device, driving-motor, damper, and selecting-commutator or sunflower device. Fig. 5 represents a central vertical sectional view of one form of the viscous damper. Fig. 6 is a diagram showing a method of operating the synchronizing device differing from that shown in Fig. 4. Fig. 7 is a diagram showing the connections for substituting resistances for the condensers shown in Fig. 1, and Fig. 8 is a diagram showing a method of producing the local synchro-

nizing-current by replacing the line polarized relay by a neutral relay and employing only one condenser.

Referring first to Fig. 1, which represents the connections and apparatus at one station or as much thereof as relates directly to the present invention, L represents a main-line conductor upon which is impressed an alternating or other periodically-varying electromotive force; A, a main local circuit upon which a continuous direct electromotive force is impressed of, for example, one hundred volts, and B and C shunts connected across the said main local circuit. The shunt B includes resistances b^3 b^3 and b^4 b^4 of, for example, one hundred and two hundred ohms, respectively, while in the shunt C are connected in series the condensers M and M'.

E represents the conventional sunflower of synchronous telegraphs, especially such as used with the inventions described in the aforementioned applications, and H represents selecting-relays connected in the segment-circuits of said sunflower. The trailer F of this sunflower is electrically connected to the shunt-circuit B at some point between the resistances b^4 b^4, as at b^3, while the segment-circuits unite and are connected to the tongue k of a relay K. The coils of this relay K are traversed by the main-line current and its contacts k' and k^2 connected to points in the shunt B between the resistances b^3 and b^4, as at b and b'. The tongue k of the relay K is vibrated by the line-current in unison with the periodic variation thereof, and the trailer F passes over one of the segments of the sunflower for each of said variations or alternations or for one or more of said alternations, the said trailer moving in synchronism with the vibrations of said relay and with the line-current. As the trailer F moves from the center of one conducting-segment to the center of the next the relay-tongue k vibrates from contact k' to k^2, thus causing a current in one direction to traverse the segment-circuit e and the selecting-relay H connected therein and a current in an opposite direction to traverse the segment-circuit e', and so on through the series. In this way by the proper adjustment of the resistances in the circuit B enough current from the circuit A will leak or flow through the circuit B to operate the selecting-relays. The object in causing the said selecting-relays to be traversed each normally by currents of the same polarity, but adjacent relays by currents of opposite polarity, is to operate local printing apparatus, which, forming no part of the present invention, need not be here described.

The present invention so far as its relation to the relay-circuits is concerned consists in the novel arrangement whereby the said relays may be operated upon a comparatively

the regulating-coils P' of a synchronizer or synchronizing device P. The circuit through these coils then passes to the tongue k^3 of the main-line relay, which tongue is vibrated in unison with the line-current, as described relative to the relay-tongue k. The tongues k and k^3 are in practice parts of the same relay, as will be hereinafter shown, but may obviously be upon separate relays, as represented. The tongue k^3 vibrates between contacts k^4 and k^5, connected in the main local circuit, the latter being provided with resistances A' and A^2 to prevent sparking at said contacts.

By the alternate charging and discharging of the condensers M and M' as the relay-tongue k^3 vibrates between its contacts an alternating current in approximate phase with the main-line current or of any phase bearing a fixed relation to the line-current is sent through the regulating-coils P' of the synchronizing device. The principle of this synchronizing device is substantially the same as the synchronizer shown and described in the Patent No. 622,636, hereinbefore referred to. In each case the device consists, broadly, of a set of coils traversed by a regulating-current of a periodically-varying character rotating in a magnetic field and driven by an independent source of power. The regulating action depends upon the phase relation between the current generated by the regulating-coils of the synchronizing device and the alternating current sent through them from some outside source, as from the condensers, by the vibration of the relay-tongue or its equivalent. If the two currents differ one hundred and eighty degrees in phase and are of the same strength, no current will flow in the regulating-coils of the synchronizer, and hence they will do no work; but when the two currents are in phase the said coils will carry a maximum load. Between these two extremes there are an infinite number of degrees of load which the coils of the synchronizing device will carry and a corresponding number of speeds, the speed varying as the load varies and the load varying as the phase relation between the above-mentioned currents varies, thus maintaining synchronism. This synchronism may be considered as being maintained with relation either with the vibrating tongue of the relay or its equivalent or with regard to the device which generates the current in the circuit which operates the relay. The specific use of this synchronizing device in telegraphy is to drive the sunflower-trailer F, for example, in synchronism with some other trailer; but it must be understood that this means for producing synchronous motion is not confined to such specific uses.

The term "synchronizing device" is employed in its broadest sense. In other words,

The same result may be accomplished by substituting the resistance T T', as shown in Fig. 7, for the condensers. Otherwise the connections are the same; but it will be noted that I do not confine myself to the use of a polar line-relay alone, for it will be seen that the desired result may be accomplished with either polar or neutral relay, and in both cases I may employ either one or two of the contacts.

In Fig. 8 I have shown a neutral relay K' replacing the polar relay K and have shown only one condenser connected in the synchronizing-circuit. The relay-tongue k^{000} will be kept in a state of vibration between the contacts k^0 and k^{00}, and when it makes contact at k^0 the condenser M will charge and a current pass through the synchronizing device P in the direction of the lower arrow. When the tongue returns to the contact k^{00}, the condenser will discharge and the current will pass through the synchronizing device in the direction of the upper arrow or in an opposite direction, thus producing the same effect as described in connection with Fig. 1, except that the period of vibration of the tongue k^{000} will be twice as great as that of the tongue k^3 in Fig. 1.

In my prior applications I show the rotatable coils of the synchronizing device mounted on the armature of the driving-motor; but for many reasons the arrangement shown in Fig. 4 is preferable. There the coils P' of the synchronizing device P are separated from the armature Q' of the continuous-current motor Q, though they are both mounted on the same shaft or connected shafts.

The synchronizing device P in this case consists, among other parts, of a plurality of coils P', the number depending upon the speed required, mounted fast on a rotatable shaft R and supplied with current at the collector-rings *p p*. These coils P' revolve in front of the stationary electromagnets P^2, which are in this case excited by a continuous current, though it will be hereinafter shown that obviously this arrangement may be changed. The direct-current motor Q drives the shaft R, which is geared or otherwise connected so as to drive the brush F. In this case it is shown geared by a small pinion *r* to a toothed disk *r'*, to which is secured the brush-holder *f*. It may be stated that other motive power than a direct-current motor could be used, if desired.

It will be obvious to any one skilled in the art that the same result may be obtained by the synchronizing device whether I employ the arrangement shown in Fig. 4 or whether an alternating current is caused to excite the magnets P^2 and a direct current caused to pass through the moving coils P'. Also an alternating current could be made to pass

noted that I may substitute for the moving coils P' the permanent magnets P^3 of Fig. 6 and the same result will be accomplished, in which case the magnets P^2 would be excited by an alternating current; nor would the effect vary were the magnets P^3 soft iron instead of permanent magnets, although in the latter case the speed may be half or made greater in the proportion two, three, four, &c. This arrangement will within reasonable limits cause the shaft R to rotate in synchronism with the line-current; but I insure a more perfect synchronism by employing the damper S in conjunction with the synchronizing device P.

In Fig. 4 the damper shown is an oil-damper and partly mounted on the same shaft R with the synchronizing device and consists of a flattened cup or oil-receptacle S', closed back and front and mounted fast upon the shaft R'. Within the cup is mounted a flanged disk S^3 upon a sleeve *s*, which is secured fast to the shaft R and extends through one face of the cup S'.

S^3 represents the oil or other suitable liquid surrounding the disk and which may be poured into the receptacle through a plug-opening or in any other suitable way. The cup-shaped portion *s'* of the receptacle catches the oil which tends to escape along the collar and allows it to flow back into the receptacle through the aperture s^2.

The action of the damper is as follows: As the shaft R rotates the disk S^3 will rotate with it and, acting through the oil, will drag the receptacle S' along with it until the said receptacle attains a speed equal to that of the disk. Then should the disk tend to diminish its speed the receptacle, by virtue of its inertia and being mounted loosely with respect to the shaft R, will drag the disk along and cause it to catch up. On the other hand, when the disk S^2 exceeds its normal speed the oil-receptacle, acting through the oil, will drag it back to normal speed. It must be understood, however, that the action of the damper is to prevent such oscillations as above referred to by deadening the variations from the actual steady motion—that is to say, the true function of the damper is to prevent these oscillations from taking place in the first instance rather than waiting until after the oscillation has occurred to correct it. The shaft R may extend all the way through the damper instead of only a portion of the way through it, as shown, and the cup S' loosely mounted thereon; but this oil-damper is only one form of damper embodying my general principle—viz., producing a damping effect between two revolving parts through a viscous medium. This viscous damping effect may be produced by a magnetic field and many other ways, and I use the word "viscous" in its broad or generic sense.

nizing-current by replacing the line polarized relay by a neutral relay and employing only one condenser.

Referring first to Fig. 1, which represents the connections and apparatus at one station or as much thereof as relates directly to the present invention, L represents a main-line conductor upon which is impressed an alternating or other periodically-varying electromotive force; A, a main local circuit upon which a continuous direct electromotive force is impressed of, for example, one hundred volts, and B and C shunts connected across the said main local circuit. The shunt B includes resistances b^3 b^3 and b^4 b^4 of, for example, one hundred and two hundred ohms, respectively, while in the shunt C are connected in series the condensers M and M'.

E represents the conventional sunflower of synchronous telegraphs, especially such as used with the inventions described in the aforementioned applications, and H represents selecting-relays connected in the segment-circuits of said sunflower. The trailer F of this sunflower is electrically connected to the shunt-circuit B at some point between the resistances b^4 b^4, as at b^3, while the segment-circuits unite and are connected to the tongue k of a relay K. The coils of this relay K are traversed by the main-line current and its contacts k' and k^2 connected to points in the shunt B between the resistances b^3 and b^4, as at b and b'. The tongue k of the relay K is vibrated by the line-current in unison with the periodic variation thereof, and the trailer F passes over one of the segments of the sunflower for each of said variations or alternations or for one or more of said alternations, the said trailer moving in synchronism with the vibrations of said relay and with the line-current. As the trailer F moves from the center of one conducting-segment to the center of the next the relay-tongue k vibrates from contact k' to k^2, thus causing a current in one direction to traverse the segment-circuit e and the selecting-relay H connected therein and a current in an opposite direction to traverse the segment-circuit e', and so on through the series. In this way by the proper adjustment of the resistances in the circuit B enough current from the circuit A will leak or flow through the circuit B to operate the selecting-relays. The object in causing the said selecting-relays to be traversed each normally by currents of the same polarity, but adjacent relays by currents of opposite polarity, is to operate local printing apparatus, which, forming no part of the present invention, need not be here described.

The present invention so far as its relation to the relay-circuits is concerned consists in the novel arrangement whereby the said relays may be operated upon a comparatively high potential direct-current circuit.

At some point in the circuit C between the condensers M and M', I connect a conductor N and connect in series with this conductor the regulating-coils P' of a synchronizer or synchronizing device P. The circuit through these coils then passes to the tongue k^3 of the main-line relay, which tongue is vibrated in unison with the line-current, as described relative to the relay-tongue k. The tongues k and k^3 are in practice parts of the same relay, as will be hereinafter shown, but may obviously be upon separate relays, as represented. The tongue k^3 vibrates between contacts k^4 and k^5, connected in the main local circuit, the latter being provided with resistances A' and A^2 to prevent sparking at said contacts.

By the alternate charging and discharging of the condensers M and M' as the relay-tongue k^3 vibrates between its contacts an alternating current in approximate phase with the main-line current or of any phase bearing a fixed relation to the line-current is sent through the regulating-coils P' of the synchronizing device. The principle of this synchronizing device is substantially the same as the synchronizer shown and described in the Patent No. 622,636, hereinbefore referred to. In each case the device consists, broadly, of a set of coils traversed by a regulating-current of a periodically-varying character rotating in a magnetic field and driven by an independent source of power. The regulating action depends upon the phase relation between the current generated by the regulating-coils of the synchronizing device and the alternating current sent through them from some outside source, as from the condensers, by the vibration of the relay-tongue or its equivalent. If the two currents differ one hundred and eighty degrees in phase and are of the same strength, no current will flow in the regulating-coils of the synchronizer, and hence they will do no work; but when the two currents are in phase the said coils will carry a maximum load. Between these two extremes there are an infinite number of degrees of load which the coils of the synchronizing device will carry and a corresponding number of speeds, the speed varying as the load varies and the load varying as the phase relation between the above-mentioned currents varies, thus maintaining synchronism. This synchronism may be considered as being maintained with relation either with the vibrating tongue of the relay or its equivalent or with regard to the device which generates the current in the circuit which operates the relay. The specific use of this synchronizing device in telegraphy is to drive the sunflower-trailer F, for example, in synchronism with some other trailer; but it must be understood that this means for producing synchronous motion is not confined to such specific uses.

The term "synchronizing device" is employed in its broadest sense. In other words, the term "synchronizing device" herein employed designates either the specific device shown or any equivalent thereof, whether of the same size or larger or smaller.

The same result may be accomplished by substituting the resistance T T', as shown in Fig. 7, for the condensers. Otherwise the connections are the same; but it will be noted that I do not confine myself to the use of a polar line-relay alone, for it will be seen that the desired result may be accomplished with either polar or neutral relay, and in both cases I may employ either one or two of the contacts.

In Fig. 8 I have shown a neutral relay K' replacing the polar relay K and have shown only one condenser connected in the synchronizing-circuit. The relay-tongue k^{000} will be kept in a state of vibration between the contacts k^0 and k^{00}, and when it makes contact at k^0 the condenser M will charge and a current pass through the synchronizing device P in the direction of the lower arrow. When the tongue returns to the contact k^{00}, the condenser will discharge and the current will pass through the synchronizing device in the direction of the upper arrow or in an opposite direction, thus producing the same effect as described in connection with Fig. 1, except that the period of vibration of the tongue k^{000} will be twice as great as that of the tongue k^3 in Fig. 1.

In my prior applications I show the rotatable coils of the synchronizing device mounted on the armature of the driving-motor; but for many reasons the arrangement shown in Fig. 4 is preferable. There the coils P' of the synchronizing device P are separated from the armature Q' of the continuous-current motor Q, though they are both mounted on the same shaft or connected shafts.

The synchronizing device P in this case consists, among other parts, of a plurality of coils P', the number depending upon the speed required, mounted fast on a rotatable shaft R and supplied with current at the collector-rings *p p*. These coils P' revolve in front of the stationary electromagnets P^2, which are in this case excited by a continuous current, though it will be hereinafter shown that obviously this arrangement may be changed. The direct-current motor Q drives the shaft R, which is geared or otherwise connected so as to drive the brush F. In this case it is shown geared by a small pinion *r* to a toothed disk *r'*, to which is secured the brush-holder *f*. It may be stated that other motive power than a direct-current motor could be used, if desired.

It will be obvious to any one skilled in the art that the same result may be obtained by the synchronizing device whether I employ the arrangement shown in Fig. 4 or whether an alternating current is caused to excite the magnets P^2 and a direct current caused to pass through the moving coils P'. Also an alternating current could be made to pass through both coils and magnets, and it is likewise obvious that either magnets or coils may be made to rotate without affecting the principle of the device. It will furthermore be noted that I may substitute for the moving coils P' the permanent magnets P^2 of Fig. 6 and the same result will be accomplished, in which case the magnets P^2 would be excited by an alternating current; nor would the effect vary were the magnets P^2 soft iron instead of permanent magnets, although in the latter case the speed may be half or made greater in the proportion two, three, four, &c. This arrangement will within reasonable limits cause the shaft R to rotate in synchronism with the line-current; but I insure a more perfect synchronism by employing the damper S in conjunction with the synchronizing device P.

In Fig. 4 the damper shown is an oil-damper and partly mounted on the same shaft R with the synchronizing device and consists of a flattened cup or oil-receptacle S', closed back and front and mounted fast upon the shaft R'. Within the cup is mounted a flanged disk S^2 upon a sleeve *s*, which is secured fast to the shaft R and extends through one face of the cup S'.

S^3 represents the oil or other suitable liquid surrounding the disk and which may be poured into the receptacle through a plug-opening or in any other suitable way. The cup-shaped portion *s'* of the receptacle catches the oil which tends to escape along the collar and allows it to flow back into the receptacle through the aperture s^2.

The action of the damper is as follows: As the shaft R rotates the disk S^2 will rotate with it and, acting through the oil, will drag the receptacle S' along with it until the said receptacle attains a speed equal to that of the disk. Then should the disk tend to diminish its speed the receptacle, by virtue of its inertia and being mounted loosely with respect to the shaft R, will drag the disk along and cause it to catch up. On the other hand, when the disk S^2 exceeds its normal speed the oil-receptacle, acting through the oil, will drag it back to normal speed. It must be understood, however, that the action of the damper is to prevent such oscillations as above referred to by deadening the variations from the actual steady motion—that is to say, the true function of the damper is to prevent these oscillations from taking place in the first instance rather than waiting until after the oscillation has occurred to correct it. The shaft R may extend all the way through the damper instead of only a portion of the way through it, as shown, and the cup S' loosely mounted thereon; but this oil-damper is only one form of damper embodying my general principle—viz., producing a damping effect between two revolving parts through a viscous medium. This viscous damping effect may be produced by a magnetic field and many other ways, and I use the word "viscous" in its broad or generic sense.

In Fig. 2 are shown the essential parts of my improved form of polarized relay. This relay K is provided with two tongues *k* and k^3, the tongue *k* being mounted on a hollow sleeve

k^6 and the tongue k^3 upon the spindle or rod k^7, which is inclosed by the sleeve k^8. These supports of the relay-tongues are pivoted in any convenient manner, so as to be revoluble to a limited extent around their longitudinal axes. The tongues k and k^3 are provided with metallic contact-strips k^4 and k^5, respectively, which vibrate between the contacts k' k^2 and k^1 k^2 respectively. These metallic strips k^4 and k^5 are insulated from the tongues, as at k^9. The same relay-coil K' surrounds or operates both tongues and may be wound in the ordinary way, as shown in Fig. 2, or it may be wound in sections, as shown in Fig. 3. In the latter case the coil is made up of, for example, five sections k^{10}, k^{11}, k^{12}, k^{13}, and k^{14}. These sections are so wound that the three central sections contain the same number of turns, while the end sections contain the same number of turns as each other, but only half as many as the central sections, and the two end sections k^{10} k^{14} and central section k^{12} are connected together, while the two intermediate sections k^{11} and k^{13} are connected together. By this means a more complete balance is obtained than could otherwise be done in case a duplex arrangement is needed.

The line-current traversing the coils of the relay K will cause both tongues k and k^3 to vibrate between their stops, and while in their action they are independent of one another they are both actuated by the same cause. In saying that these relay-tongues are independent it is to be understood that they are independent to this extent: that if one is held stationary the others may continue to vibrate; but in practice it is preferable to have just enough friction between the spindle k^7 and sleeve k^8 to cause one tongue to drag the other if neither is held stationary and the operating force is applied to one only.

The relays K can be both polar relays or neutral ones, or one may be a polar relay and the other a neutral relay. They may be separated or combined.

Having thus fully described my present invention, what I claim, and desire to secure by Letters Patent of the United States, is—

1. The combination with a synchronizing device, of a plurality of condensers, said condensers being connected in circuit with said synchronizing device, and means for causing said condensers to alternately discharge through said synchronizing device for regulating the motion of the same, substantially as described.

2. The combination with a synchronizing device, of a condenser, said condenser being connected in circuit with said synchronizing device, and means for causing said condenser to alternately charge and discharge through said synchronizing device for regulating the [illegible] substantially as described.

said condenser-circuits, and means for causing said condensers to alternately discharge through said synchronizing device for regulating the motion of the same, substantially as described.

4. The combination with a synchronizing device, of two condensers, said condensers being connected in circuit with said synchronizing device and means for causing one of said condensers to discharge through said synchronizing device while the other of said condensers is charging and vice versa whereby said synchronizing device is regulated, substantially as described.

5. The combination with a synchronizing device, of two condensers, said condensers being connected in circuit with said synchronizing device, proper resistances in each of the condenser-circuits and means for causing one of said condensers to discharge through said synchronizing device while the other of said condensers is charging and vice versa whereby said synchronizing device is regulated, substantially as described.

6. The combination with a synchronizing device, of a condenser connected in circuit with said synchronizing device, a relay, a conductor carrying an alternating current and traversing said railway whereby the said condenser is caused to discharge through said synchronizing device, substantially as described.

7. The combination with a synchronizing device, of a plurality of condensers connected in circuit with said synchronizing device, a relay, a conductor carrying an alternating current and traversing said relay whereby the said condensers are caused to alternately discharge through said synchronizing device, substantially as described.

8. The combination with a main-line circuit carrying an alternating electric current, of a main local circuit having a direct electromotive force impressed upon it, a relay having its contacts connected in said main local circuit, condensers in a shunt-circuit, a circuit passing from said shunt-circuit at a point intermediate between said condensers to said relay-tongue and a synchronizing device traversed by the current of the last-named circuit, substantially as described.

9. The combination with a main-line wire carrying an alternating electric current, a relay operated by said current, a local circuit carrying a direct current and connected to each of the contacts of said relay, a shunt-circuit connected across said local circuit, condensers connected in said shunt-circuit and a circuit extending from said shunt-circuit at a point intermediate between said condensers to said relay-tongue, substantially as described.

10. The combination with a main-line wire [illegible]

denser connected to one side of said local circuit and to the tongue of said relay, substantially as described.

11. The combination with a conductor carrying an alternating electric current, a relay operated by said alternating current, a local circuit supplied with a direct current, and connected to the contacts of said relay by a proper resistance, condensers connected in shunt with said main local circuit, a conductor connected to the condenser-circuit intermediate between said condensers and connected to said relay-tongue, substantially as described.

12. The combination with two condensers, of a relay having one of its contacts in each condenser-circuit, a conductor connected to the tongue of said relay and to the condenser-circuit intermediate between said condensers, a conductor carrying an alternating current and traversing said relay whereby the said condensers are caused to alternately discharge through the conductor connected to said relay-tongue, substantially as described.

13. The combination with a main-line circuit carrying an alternating electric current, of a main local circuit carrying a direct current, a relay having its contacts connected in said main local circuit, each through a proper resistance, a shunt-circuit connected across said main local circuit, condensers in said shunt-circuit, a circuit passing from said shunt-circuit at a point intermediate between said condensers to said relay-tongue and a synchronizing device traversed by the current of the last-named circuit, substantially as described.

14. In a system of synchronous telegraphy the combination with a main-line circuit carrying an alternating electric current, of a main local circuit carrying a direct current, a relay having its contacts connected in said main local circuit, a shunt-circuit connected across said main local circuit, properly-adjusted resistances in said shunt-circuit, a circuit passing from said shunt-circuit at a point intermediate between said resistances to said relay-tongue and a sunflower and trailer device with its segment-circuits traversed by the current in the last-named circuit, substantially as described.

15. The combination with a conductor carrying an alternating electric current, a relay operated by said alternating current, a local circuit supplied with a direct current and connected to the contacts of said relay by a proper resistance, properly-adjusted resistances connected across said main local circuit, a conductor connected between said resistances and connected to said relay-tongue, substantially as described.

16. In a system of telegraphy, the combination with a conductor carrying an alternating electric current, of a relay operated by said alternating current, a main local circuit carrying a direct current, a shunt-circuit connected across said main local circuit, a branch circuit connected to said shunt-circuit and passing through the contacts of said relay, a sunflower and trailer device having its segment-circuits connected to the tongue of said relay and its trailer connected to said shunt-circuit, substantially as described.

17. In a system of telegraphy, the combination with a conductor carrying an alternating electric current, of a relay operated by said alternating current, a main local circuit carrying a direct current, a shunt-circuit connected through proper resistances across said main local circuit, a branch circuit connected to said shunt-circuit and passing through the contacts of said relay, a sunflower and trailer device having its segment-circuits connected to the tongue of said relay and its trailer connected to said shunt-circuit, substantially as described.

18. In a system of telegraphy, the combination with a conductor carrying an alternating electric current, of a relay operated by said alternating current, a main local circuit carrying a direct current, a shunt circuit connected through proper resistances across said main local circuit, a branch circuit connected to said shunt-circuit and passing through the contacts of said relay, a sunflower and trailer device having its segment-circuits connected to the tongue of said relay and its trailer connected to said shunt-circuit and a plurality of selecting-relays connected in said segment-circuit, substantially as described.

19. A damper consisting of two revolving parts one of which is freely moving and connected to the other by viscous damping, substantially as described.

20. The combination with a shaft, the speed of which is to be maintained approximately uniform, of a device for damping the oscillatory vibrations in the motion of said shaft, said device comprising a member mounted to rotate with said shaft, and a second member having inertia and capable of movement relative to said shaft, and damping means connecting the said members.

21. The combination with a source of power, of a synchronizing device driven thereby, a revolving body connected to said synchronizing device and a second revolving body freely moving and connected to the first by means of viscous damping, substantially as described.

22. The combination with a source of power, of a synchronizing device driven thereby, and regulated by an alternating electric current, a revolving body connected to said synchronizing device and a second revolving body freely moving and connected to the first by means of viscous damping, substantially as described.

23. The combination with a synchronous motor, of means for damping oscillatory variations in the speed of the motor-shaft, said means comprising a body mounted to rotate

k^6 and the tongue k^5 upon the spindle or rod k^7, which is inclosed by the sleeve k^6. These supports of the relay-tongues are pivoted in any convenient manner, so as to be revoluble to a limited extent around their longitudinal axes. The tongues k and k^5 are provided with metallic contact-strips k^8 and k^9, respectively, which vibrate between the contacts k' k^2 and k^4 k^3 respectively. These metallic strips k^8 and k^9 are insulated from the tongues, as at k^{10}. The same relay-coil K' surrounds or operates both tongues and may be wound in the ordinary way, as shown in Fig. 2, or it may be wound in sections, as shown in Fig. 3. In the latter case the coil is made up of, for example, five sections k^{10}, k^{11}, k^{12}, k^{13}, and k^{14}. These sections are so wound that the three central sections contain the same number of turns, while the end sections contain the same number of turns as each other, but only half as many as the central sections, and the two end sections k^{10} k^{14} and central section k^{12} are connected together, while the two intermediate sections k^{11} and k^{13} are connected together. By this means a more complete balance is obtained than could otherwise be done in case a duplex arrangement is needed.

The line-current traversing the coils of the relay K will cause both tongues k and k^5 to vibrate between their stops, and while in their action they are independent of one another they are both actuated by the same cause. In saying that these relay-tongues are independent it is to be understood that they are independent to this extent: that if one is held stationary the others may continue to vibrate; but in practice it is preferable to have just enough friction between the spindle k^7 and sleeve k^6 to cause one tongue to drag the other if neither is held stationary and the operating force is applied to one only.

The relays K can be both polar relays or neutral ones, or one may be a polar relay and the other a neutral relay. They may be separated or combined.

Having thus fully described my present invention, what I claim, and desire to secure by Letters Patent of the United States, is—

1. The combination with a synchronizing device, of a plurality of condensers, said condensers being connected in circuit with said synchronizing device, and means for causing said condensers to alternately discharge through said synchronizing device for regulating the motion of the same, substantially as described.

2. The combination with a synchronizing device, of a condenser, said condenser being connected in circuit with said synchronizing device, and means for causing said condenser to alternately charge and discharge through said synchronizing device for regulating the motion of the same, substantially as described.

3. The combination with a synchronizing device, of a plurality of condensers, said condensers being connected in circuit with said synchronizing device, proper resistances in said condenser-circuits, and means for causing said condensers to alternately discharge through said synchronizing device for regulating the motion of the same, substantially as described.

4. The combination with a synchronizing device, of two condensers, said condensers being connected in circuit with said synchronizing device and means for causing one of said condensers to discharge through said synchronizing device while the other of said condensers is charging and vice versa whereby said synchronizing device is regulated, substantially as described.

5. The combination with a synchronizing device, of two condensers, said condensers being connected in circuit with said synchronizing device, proper resistances in each of the condenser-circuits and means for causing one of said condensers to discharge through said synchronizing device while the other of said condensers is charging and vice versa whereby said synchronizing device is regulated, substantially as described.

6. The combination with a synchronizing device, of a condenser connected in circuit with said synchronizing device, a relay, a conductor carrying an alternating current and traversing said railway whereby the said condenser is caused to discharge through said synchronizing device, substantially as described.

7. The combination with a synchronizing device, of a plurality of condensers connected in circuit with said synchronizing device, a relay, a conductor carrying an alternating current and traversing said relay whereby the said condensers are caused to alternately discharge through said synchronizing device, substantially as described.

8. The combination with a main-line circuit carrying an alternating electric current, of a main local circuit having a direct electromotive force impressed upon it, a relay having its contacts connected in said main local circuit, condensers in a shunt-circuit, a circuit passing from said shunt-circuit at a point intermediate between said condensers to said relay-tongue and a synchronizing device traversed by the current of the last-named circuit, substantially as described.

9. The combination with a main-line wire carrying an alternating electric current, a relay operated by said current, a local circuit carrying a direct current and connected to each of the contacts of said relay, a shunt-circuit connected across said local circuit, condensers connected in said shunt-circuit and a circuit extending from said shunt-circuit at a point intermediate between said condensers to said relay-tongue, substantially as described.

10. The combination with a main-line wire carrying an alternating electric current, a relay operated by said current, a local circuit carrying a direct current and connected to each of the contacts of said relay, a con-

tially as described.

11. The combination with a conductor carrying an alternating electric current, a relay operated by said alternating current, a local circuit supplied with a direct current, and connected to the contacts of said relay by a proper resistance, condensers connected in shunt with said main local circuit, a conductor connected to the condenser-circuit intermediate between said condensers and connected to said relay-tongue, substantially as described.

12. The combination with two condensers, of a relay having one of its contacts in each condenser-circuit, a conductor connected to the tongue of said relay and to the condenser-circuit intermediate between said condensers, a conductor carrying an alternating current and traversing said relay whereby the said condensers are caused to alternately discharge through the conductor connected to said relay-tongue, substantially as described.

13. The combination with a main-line circuit carrying an alternating electric current, of a main local circuit carrying a direct current, a relay having its contacts connected in said main local circuit, each through a proper resistance, a shunt-circuit connected across said main local circuit, condensers in said shunt-circuit, a circuit passing from said shunt-circuit at a point intermediate between said condensers to said relay-tongue and a synchronizing device traversed by the current of the last-named circuit, substantially as described.

14. In a system of synchronous telegraphy the combination with a main-line circuit carrying an alternating electric current, of a main local circuit carrying a direct current, a relay having its contacts connected in said main local circuit, a shunt-circuit connected across said main local circuit, properly-adjusted resistances in said shunt-circuit, a circuit passing from said shunt-circuit at a point intermediate between said resistances to said relay-tongue and a sunflower and trailer device with its segment-circuits traversed by the current in the last-named circuit, substantially as described.

15. The combination with a conductor carrying an alternating electric current, a relay operated by said alternating current, a local circuit supplied with a direct current and connected to the contacts of said relay by a proper resistance, properly-adjusted resistances connected across said main local circuit, a conductor connected between said resistances and connected to said relay-tongue, substantially as described.

16. In a system of telegraphy, the combination with a conductor carrying an alternating electric current, of a relay operated by said alternating current, a main local circuit carrying a direct current, a shunt-circuit connected to said shunt-circuit and passing through the contacts of said relay, a sunflower and trailer device having its segment-circuits connected to the tongue of said relay and its trailer connected to said shunt-circuit, substantially as described.

17. In a system of telegraphy, the combination with a conductor carrying an alternating electric current, of a relay operated by said alternating current, a main local circuit carrying a direct current, a shunt-circuit connected through proper resistances across said main local circuit, a branch circuit connected to said shunt-circuit and passing through the contacts of said relay, a sunflower and trailer device having its segment-circuits connected to the tongue of said relay and its trailer connected to said shunt-circuit, substantially as described.

18. In a system of telegraphy, the combination with a conductor carrying an alternating electric current, of a relay operated by said alternating current, a main local circuit carrying a direct current, a shunt circuit connected through proper resistances across said main local circuit, a branch circuit connected to said shunt-circuit and passing through the contacts of said relay, a sunflower and trailer device having its segment-circuits connected to the tongue of said relay and its trailer connected to said shunt-circuit and a plurality of selecting-relays connected in said segment-circuit, substantially as described.

19. A damper consisting of two revolving parts one of which is freely moving and connected to the other by viscous damping, substantially as described.

20. The combination with a shaft, the speed of which is to be maintained approximately uniform, of a device for damping the oscillatory vibrations in the motion of said shaft, said device comprising a member mounted to rotate with said shaft, and a second member having inertia and capable of movement relative to said shaft, and damping means connecting the said members.

21. The combination with a source of power, of a synchronizing device driven thereby, a revolving body connected to said synchronizing device and a second revolving body freely moving and connected to the first by means of viscous damping, substantially as described.

22. The combination with a source of power, of a synchronizing device driven thereby, and regulated by an alternating electric current, a revolving body connected to said synchronizing device and a second revolving body freely moving and connected to the first by means of viscous damping, substantially as described.

23. The combination with a synchronous motor, of means for damping oscillatory variations in the speed of the motor-shaft, said means comprising a body mounted to rotate with said shaft and a second body having in-

ertia and capable of movement relative to the first body, and damping means connecting the two bodies.

24. The combination with a source of power, of a synchronizing device driven thereby and regulated by an alternating electric current, a revolving body connected to said synchronizing device and a second revolving body connected to the first by means of viscous damping, substantially as described.

25. The combination with a sunflower and trailer device of a motor operating said device, a synchronizing device driven by said motor and regulated by an alternating electric current, a revolving body connected to said synchronizing device and a second revolving body connected to the first through viscous damping, substantially as described.

26. A damper having a driven revolving body, a freely-moving revoluble receptacle inclosing said revolving body, and a liquid inclosed in said receptacle and surrounding the first revolving body whereby motion is transmitted to the receptacle and the vibration of both the revolving body and receptacle are damped, substantially as described.

27. In a damper the combination with a driven disk, of a freely-moving revoluble receptacle inclosing said disk, a viscous damping fluid carried by said receptacle and inclosing said disk whereby motion is transmitted to said receptacle from said disk and the vibration of both is damped, substantially as described.

28. In a polarized relay the combination with two relay-tongues mounted upon independent oscillating supports, an exciting-coil surrounding said supports which form the core thereof and independent contacts for each tongue, substantially as described.

29. In a polarized relay the combination with an exciting-coil, of a hollow iron core passing through said coil, a second core passing longitudinally through said hollow core, said cores being revoluble about their longitudinal axes independent of each other, a tongue mounted on the hollow core and a tongue mounted on the second core, independent contacts for each of said tongues, substantially as described.

30. The combination with a synchronizing device, of a condenser connected in circuit with said synchronizing device, a relay, a conductor carrying a periodically-varying electric current and traversing said relay whereby the said condenser is caused to discharge through said synchronizing device, substantially as described.

31. The combination with a synchronizing device, of a plurality of condensers connected in circuit with said synchronizing device, a relay, a conductor carrying a periodically-varying electric current and traversing said relay whereby the said condensers are caused to alternately discharge through said synchronizing device, substantially as described.

32. The combination with a main-line circuit carrying an electric current which periodically varies in intensity, of a main local circuit having a direct electromotive force impressed upon it, a relay having its contacts connected in said main local circuit, a shunt-circuit connected across said main local circuit, condensers in said shunt-circuit, a circuit passing from said shunt-circuit at a point intermediate between said condensers to said relay-tongue and a synchronizing device traversed by the current of the last-named circuit, substantially as described.

33. The combination with a main-line wire carrying a periodically-varying electric current, a relay operated by said current, a local circuit carrying a direct current and connected to each of the contacts of said relay, a shunt-circuit connected across said local circuit, condensers connected in said shunt-circuit and a circuit extending from said shunt-circuit at a point intermediate between said condensers to said relay-tongue, substantially as described.

34. The combination with a main-line wire carrying a periodically-varying electric current, a relay operated by said current, a local circuit carrying a direct current and connected to each of the contacts of said relay, a condenser connected to one side of said local circuit and to the tongue of said relay, substantially as described.

35. The combination with a conductor carrying a periodically-varying electric current, a relay operated by said current, a local circuit supplied with a direct current, and connected to the contacts of said relay by a proper resistance, condensers connected in shunt with said main local circuit, a conductor connected to the condenser-circuit intermediate between said condensers and connected to said relay-tongue, substantially as described.

36. The combination with two condensers, of a relay having one of its contacts in each condenser-circuit, a conductor connected to the tongue of said relay and to the condenser-circuit intermediate between said condensers, a conductor carrying a periodically-varying electric current and traversing said relay whereby the said condensers are caused to alternately discharge through the conductor connected to said relay-tongue, substantially as described.

37. The combination with a main-line circuit carrying a periodically-varying electric current, of a main local circuit carrying a direct current, a relay having its contacts connected in said main local circuit, each through a proper resistance, a shunt-circuit connected across said main local circuit, condensers in said shunt-circuit, a circuit passing from said shunt-circuit at a point intermediate between said condensers to said relay-tongue and a synchronizing device traversed by the current of the last-named circuit, substantially as described.

38. In a system of synchronous telegraphy,

the combination with a main-line circuit carrying a periodically-varying electric current, of a main local circuit carrying a direct current, a relay having its contacts connected in said main local circuit, a shunt-circuit connected across said main local circuit, properly-adjusted resistances in said shunt-circuit, a circuit passing from said shunt-circuit at a point intermediate between said resistances to said relay-tongue and a sunflower and trailer device with its segment-circuits traversed by the current in the last-named circuit, substantially as described.

39. The combination with a conductor carrying a periodically-varying electric current, of a local circuit connected to a source of direct current, properly-adjusted resistances connected across the local circuit, contacts located in said local circuit, a conductor connected to a point between said resistances, and means operated by the periodically-varying current for completing the circuit from said conductor to first one and then the other of said contacts.

40. In a system of telegraphy, the combination with a conductor carrying a periodically-varying electric current, of a relay operated by said current, a main local circuit carrying a direct current, a shunt-circuit connected across said main local circuit, a branch circuit connected to said shunt-circuit and passing through the contacts of said relay, a sunflower and trailer device having its segment-circuits connected to the tongue of said relay and its trailer connected to said shunt-circuit, substantially as described.

41. In a system of telegraphy, the combination with a conductor carrying a periodically-varying electric current, of a relay operated by said current, a main local circuit carrying a direct current, a shunt-circuit connected through proper resistances across said main local circuit, a branch circuit connected to said shunt-circuit and passing through the contacts of said relay, a sunflower and trailer device having its segment-circuits connected to the tongue of said relay and its trailer connected to said shunt-circuit, substantially as described.

42. In a system of telegraphy, the combination with a conductor carrying a periodically-varying electric current, of a relay operated by said current, a main local circuit carrying a direct current, a shunt-circuit connected through proper resistances across said main local circuit, a branch circuit connected to said shunt-circuit and passing through the contacts of said relay, a sunflower and trailer device having its segment-circuits connected to the tongue of said relay and its trailer connected to said shunt-circuit and a plurality of selecting relays connected in said segment-circuit, substantially as described.

43. The combination with a synchronizing device of a damping device acting to damp the oscillatory variations thereof from a steady motion, substantially as described.

44. The combination with a continuously-moving synchronizing device, of a damping device acting to damp the oscillatory variations thereof from a steady motion, substantially as described.

45. The combination with a revolving mechanism the speed of which is to be maintained uniform, of a damper acting to damp any oscillatory variations from the uniform motion and comprising a plurality of freely-moving members connected by viscous damping, substantially as described.

46. The combination with a revolving mechanism the speed of which is to be maintained uniform, of a damper acting to damp any oscillatory variations from the uniform motion and comprising a plurality of revolving parts, some of said parts being tightly secured to their support and the others loosely fitted thereon, the said tightly and loosely fitted parts being connected through the medium of viscous damping, substantially as described.

47. The combination with an electric motor and a synchronizing device having a steady motion, of a damping device acting to damp the oscillatory variations from said steady motion, substantially as described.

48. The combination with a synchronizing device, of a direct-current electric motor driving said synchronizing device and having a steady motion, and a damper acting to damp the oscillatory variations from said steady motion, substantially as described.

49. The combination with a synchronizing device having a steady motion and whose speed is regulated by a periodically-varying electric current, of a damper acting to damp the oscillatory variations from said steady motion, substantially as described.

50. The combination of a damper, substantially as described, with an electrically-regulated direct-current motor and an alternating-current dynamo acting to synchronize said motor, substantially as described.

51. A telegraph-line, in combination with a local circuit and a source of direct current connected thereto, of means for varying the current periodically in a part of the local circuit, said means comprising a condenser and relay, substantially as described.

52. A telegraph-line, in combination with a local circuit and a source of direct current connected thereto, of means for varying the current periodically in a part of the local circuit, said means comprising condensers and a relay, substantially as described.

53. A telegraph-line carrying an alternating electric current, in combination with a local circuit and a source of direct current connected thereto, of means for varying the current periodically in a part of the local circuit, said means comprising a condenser and relay, substantially as described.

54. A telegraph-line carrying an alternating electric current, in combination with a local circuit and a source of direct current connected thereto, of means for varying the current periodically in a part of the local circuit, said means comprising condensers and a relay, substantially as described.

55. A telegraph-line carrying a periodically-varying electric current, a vibrating contact-maker operated by the said current, a local circuit connected to the contacts of said contact-maker, and a condenser connected to one side of said local circuit and to said contact-maker, substantially as described.

56. A telegraph-line carrying a periodically-varying electric current, a local circuit having contacts located therein, a conductor vibrated between said contacts, condensers connected across the local circuit, and the vibrating conductor connected between the condensers whereby electricity from the condensers only may traverse said conductor, substantially as described.

57. A telegraph-line carrying a periodically-varying electric current, a local circuit having contacts located therein, an electric conductor vibrated between said contacts, condensers connected across the said local circuit, and the vibrating conductor connected between the condensers whereby electricity from the condensers only may traverse the said conductor and a synchronizing device regulated by the charging and discharging of said condensers, substantially as described.

In testimony whereof I affix my signature in presence of two witnesses.

HENRY A. ROWLAND.

Witnesses:
W. SCOTT GOSNELL,
DANL. BRIDE.

936

No. 724,645. PATENTED APR. 7, 1903.

J. J. WOOD.

MEANS FOR PREVENTING FLUCTUATIONS IN ROTARY MOTORS.

APPLICATION FILED MAY 31, 1900.

NO MODEL.

FIG. 1.

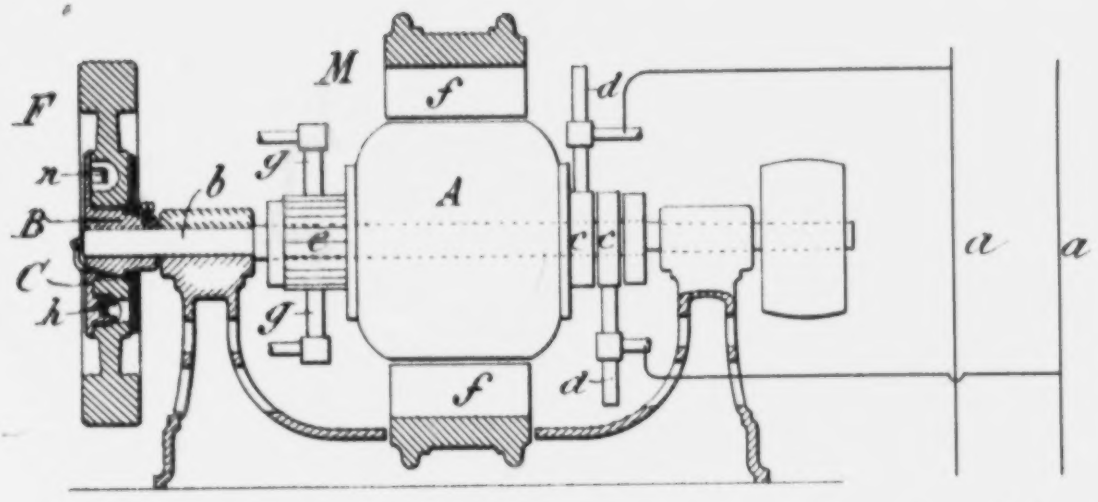

FIG. 2.

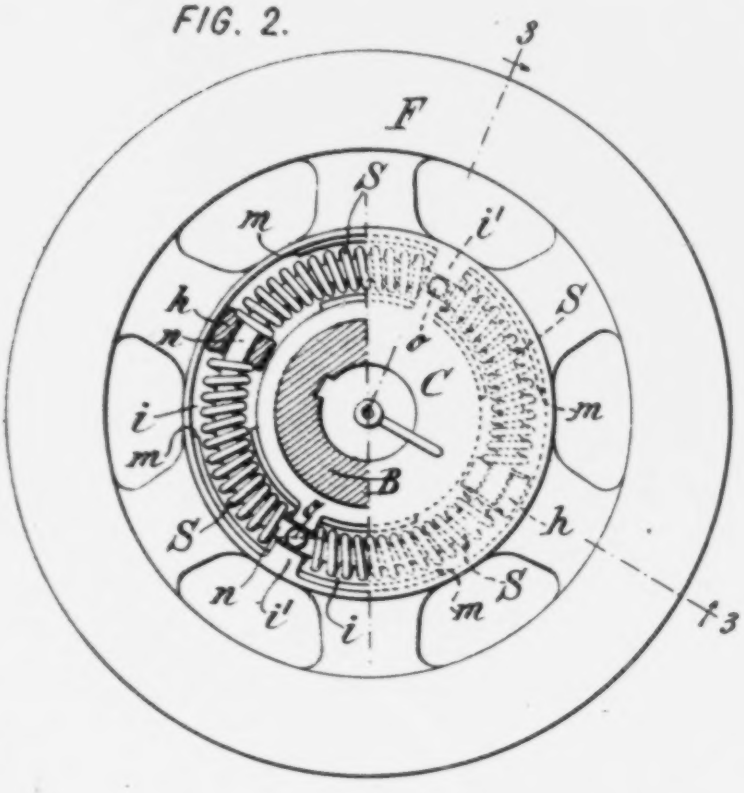

FIG. 3.

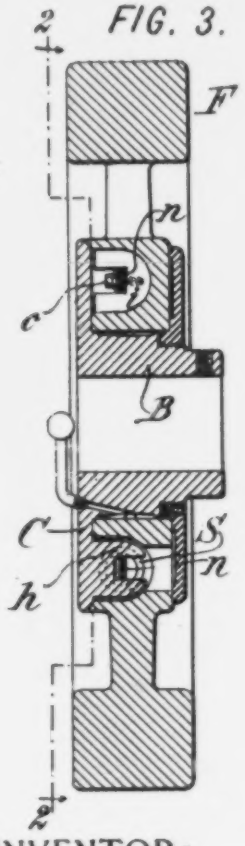

INVENTOR:

James J. Wood,

WITNESSES:

UNITED STATES PATENT OFFICE.

JAMES J. WOOD, OF FORT WAYNE, INDIANA, ASSIGNOR TO THE GENERAL ELECTRIC COMPANY, A CORPORATION OF NEW YORK.

MEANS FOR PREVENTING FLUCTUATIONS IN ROTARY MOTORS.

SPECIFICATION forming part of Letters Patent No. 724,645, dated April 7, 1903.

Application filed May 31, 1900. Serial No. 18,646. (No model.)

To all whom it may concern:

Be it known that I, JAMES J. WOOD, a citizen of the United States, residing at Fort Wayne, in the county of Allen and State of Indiana, have invented certain new and useful Improvements in Means for Preventing Fluctuations in Rotary Motors, of which the following is a specification.

The object of this invention is to prevent or reduce fluctuations occurring in "rotary motor devices," by which term I mean to include prime movers—such as steam-engines, turbines, impact-wheels, or the like—and also secondary motor devices—such, for example, as dynamo-electric generators, electric motors, rotary converters, and the like.

My invention finds its most important application to "synchronous alternating dynamo-electric machines," by which term I mean to include alternating generators, alternating synchronous motors, and rotary converters. My invention is applicable wherever in such a rotary motor fluctuations are liable to occur from a uniform rotation by reason either of variations in the propulsive energy or variations in the work or load, which variations recur at frequent intervals, so that they tend to produce alternate accelerations and ret rdations of the motor, such as are known in the art as "hunting" or "pumping."

To make my invention fully apparent, I will proceed to describe the same in its application to a synchronous alternating motor. In operating such motors it is well known that when the dynamo or generator fluctuates in speed in different parts of a revolution (as occurs when the generator is driven by an engine the propulsive thrust of which varies at different periods of each revolution) the motor tends to hunt or pump—that is, its armature runs sometimes a little faster and sometimes a little slower than the generator, with the result of causing a beating sound in the motor and of disturbing the circuit, as will be indicated hereinafter. Such hunting or beating action is usually indicative of [illegible] speed of a synchronous motor. The motor cannot, however, assume instantly the speed required by the new speed of the generator. When the speed of the generator increases, the motor-armature begins to increase in speed; but by reason of its lagging the motor receives an increased current, because its armature is not in normal position for the new frequency and because additional current is required for supplying the energy necessary for increasing its speed. This additional current produces a difference of magnetism of the field, which must again be altered when the generator speed decreases below the average. The motor is therefore undergoing a slight variation in speed, which seeks to approximate to, but does not exactly correspond with, that of the generator. This pumping or rocking or hunting effect, however, will almost entirely disappear when even a small load is put on the motor. It has heretofore been the custom to weaken the field of a synchronous motor when it was found to pump. The effect of this is to lower the electromotive force of the motor, thereby putting an artificial load on the armature, which, however, while it reduces the pumping, has the disadvantage of reducing the electromotive force of the generator and of upsetting the line. To overcome this defect and avoid interference with the line, it has been proposed to apply a fly-wheel to the shaft of the motor through the medium of a yielding connection comprising a spring or springs under tensile strain. It has been found in practice, however, that this construction is not an efficient one, as the springs and connections quickly break in use. By my invention I aim to provide an improved construction of such a device, wherein this defect is avoided. I hence provide a spring connection between the fly-wheel and shaft, wherein the spring or springs act by compression to produce the desired effect, and I provide stops for limiting the relative

MEANS FOR PREVENTING FLUCTUATIONS IN ROTARY MOTORS.

APPLICATION FILED MAY 31, 1900.

NO MODEL.

FIG. 1.

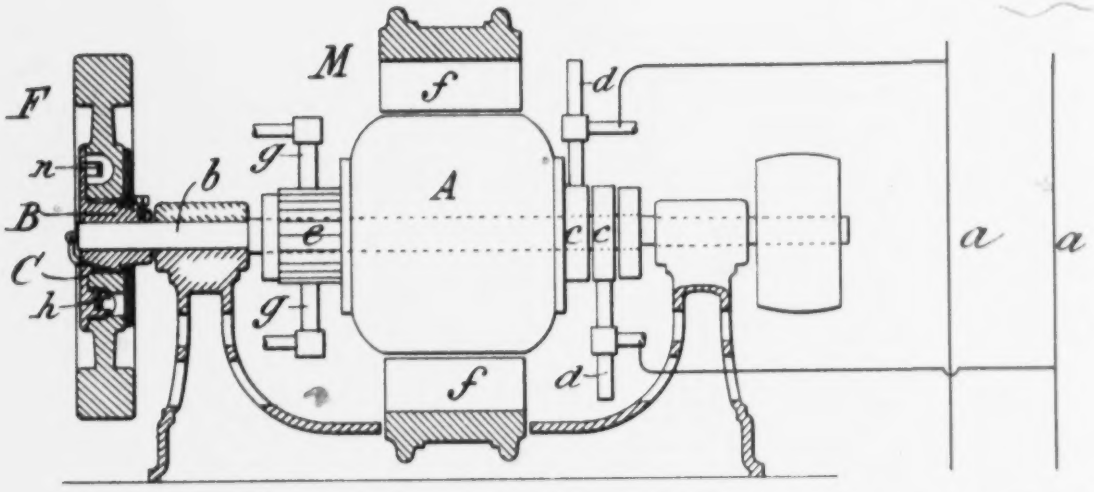

FIG. 2.

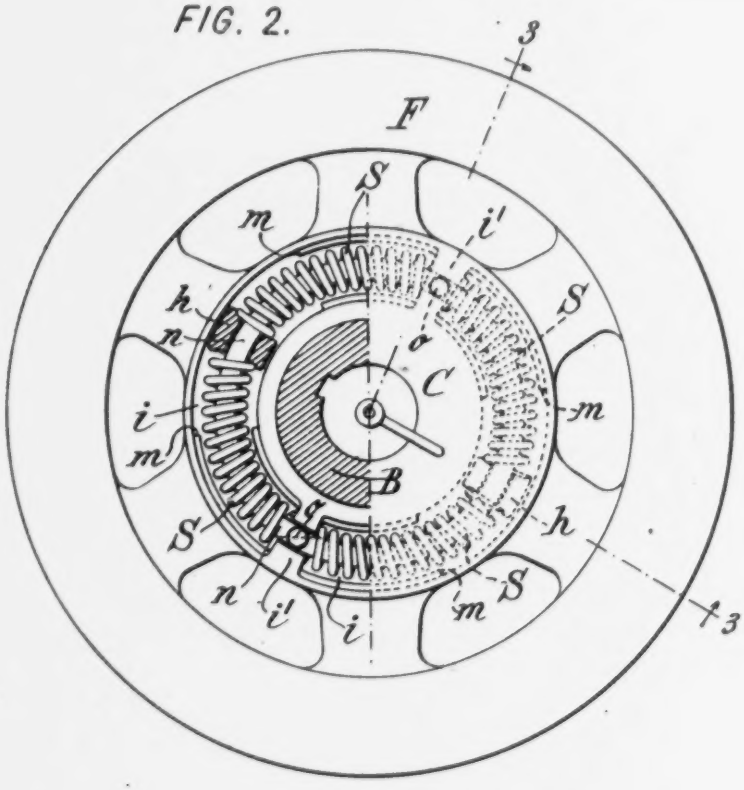

FIG. 3.

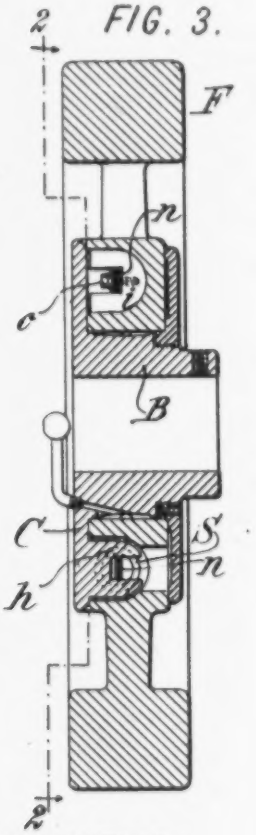

WITNESSES:

Fred Whitz

Thomas Wallace

INVENTOR:

James J. Wood,

By Attorneys,

Dustin & Fraser Co.

UNITED STATES PATENT OFFICE.

JAMES J. WOOD, OF FORT WAYNE, INDIANA, ASSIGNOR TO THE GENERAL ELECTRIC COMPANY, A CORPORATION OF NEW YORK.

MEANS FOR PREVENTING FLUCTUATIONS IN ROTARY MOTORS.

SPECIFICATION forming part of Letters Patent No. 724,645, dated April 7, 1903.

Application filed May 31, 1900. Serial No. 18,646. (No model.)

To all whom it may concern:

Be it known that I, JAMES J. WOOD, a citizen of the United States, residing at Fort Wayne, in the county of Allen and State of Indiana, have invented certain new and useful Improvements in Means for Preventing Fluctuations in Rotary Motors, of which the following is a specification.

The object of this invention is to prevent or reduce fluctuations occurring in "rotary motor devices," by which term I mean to include prime movers—such as steam-engines, turbines, impact-wheels, or the like—and also secondary motor devices—such, for example, as dynamo-electric generators, electric motors, rotary converters, and the like.

My invention finds its most important application to "synchronous alternating dynamo-electric machines," by which term I mean to include alternating generators, alternating synchronous motors, and rotary converters. My invention is applicable wherever in such a rotary motor fluctuations are liable to occur from a uniform rotation by reason either of variations in the propulsive energy or variations in the work or load, which variations recur at frequent intervals, so that they tend to produce alternate accelerations and ret r-dations of the motor, such as are known in the art as "hunting" or "pumping."

To make my invention fully apparent, I will proceed to describe the same in its application to a synchronous alternating motor. In operating such motors it is well known that when the dynamo or generator fluctuates in speed in different parts of a revolution (as occurs when the generator is driven by an engine the propulsive thrust of which varies at different periods of each revolution) the motor tends to hunt or pump—that is, its armature runs sometimes a little faster and sometimes a little slower than the generator, with the result of causing a beating sound in the motor and of disturbing the circuit, as will be indicated hereinafter. Such hunting or beating action is usually indicative of some irregularity in the circuit feeding the motor. This irregularity may consist of variations either in speed or in electromotive force. The variation in speed of the generator tends to cause a corresponding variation in the speed of a synchronous motor. The motor cannot, however, assume instantly the speed required by the new speed of the generator. When the speed of the generator increases, the motor-armature begins to increase in speed; but by reason of its lagging the motor receives an increased current, because its armature is not in normal position for the new frequency and because additional current is required for supplying the energy necessary for increasing its speed. This additional current produces a difference of magnetism of the field, which must again be altered when the generator speed decreases below the average. The motor is therefore undergoing a slight variation in speed, which seeks to approximate to, but does not exactly correspond with, that of the generator. This pumping or rocking or hunting effect, however, will almost entirely disappear when even a small load is put on the motor. It has heretofore been the custom to weaken the field of a synchronous motor when it was found to pump. The effect of this is to lower the electromotive force of the motor, thereby putting an artificial load on the armature, which, however, while it reduces the pumping, has the disadvantage of reducing the electromotive force of the generator and of upsetting the line. To overcome this defect and avoid interference with the line, it has been proposed to apply a fly-wheel to the shaft of the motor through the medium of a yielding connection comprising a spring or springs under tensile strain. It has been found in practice, however, that this construction is not an efficient one, as the springs and connections quickly break in use. By my invention I aim to provide an improved construction of such a device, wherein this defect is avoided. I hence provide a spring connection between the fly-wheel and shaft, wherein the spring or springs act by compression to produce the desired effect, and I provide stops for limiting the relative movement of the fly-wheel and motor-shaft, so that the degree of compression which may be applied to the springs is limited, and provide means for guiding the springs concentrically with the axis of the wheel. The effect of such fly-wheel is to prevent the objec-

tionable pumping action referred to. If the generator speed suddenly increases, the armature tends to correspondingly accelerate its speed; but the fly-wheel lags behind, thereby putting a slight load on the motor, and then when the generator slows down the motor-armature tends to run slower, while the fly-wheel, tending to run at a uniform speed, catches up with the motor-shaft and forces it ahead or resists its tendency to slow down, thereby again putting a slight load on the motor. I have already stated that putting a slight load on a synchronous motor extinguishes the pumping effect, this being equally true whether it is electrical, by weakening the field and taking extra current, or is mechanical, by throwing some additional work upon the motor. Such yieldingly-connected fly-wheel is of the latter order and has the effect of causing the motor to run without any pumping. Inasmuch as the load imposed by the fly-wheel is felt only at the instants when the variation in speed occurs, its effect in correcting the pumping is accompanied by less loss of energy than with a load which imposes a continuous drag on the motor.

In the accompanying drawings, Figure 1 is sectional elevation of a motor or other synchronous dynamo-electric machine provided with the preferred form of my invention. Fig. 2 is a face view of the fly-wheel, showing one-half of the shaft-collar in section on the line 2 2 in Fig. 3. Fig. 3 is a transverse section of the fly-wheel and collar in two planes, as denoted by the line 3 3 in Fig. 2.

In Fig. 1 I have shown what may, for example, be understood as an alternating motor of well-known type or as a rotary converter. In this figure, *f* is the field-magnet, A is the armature, *b* is the armature-shaft, *c c* are the collector-rings, and *d d* are the brushes leading the alternating current into these rings. I have shown this machine as constructed with a commutator *e* for feeding continuous current to brushes *g g* for the purpose of exciting the field-magnet; but these exciting connections not being material to my invention are not shown.

Referring to Fig. 1, on the armature-shaft *b* (or any other shaft driven therefrom) is mounted a fly-wheel F. The preferred construction is that shown in Figs. 1 to 3, where the fly-wheel F is loosely mounted upon a sleeve B, which itself is keyed or otherwise fixed upon the shaft. Attached to the shaft is a collar or flange C, which is preferably made in one piece with the sleeve B and which has one or more (preferably two) projections *h h*, each of which constitutes two opposed abutments. The fly-wheel F has preferably two arc-shaped chambers or grooves *i i*, which are formed in such manner as to leave webs or abutments *i' i'*. The chambers *i i* are adapted to receive the projections *h h* of the collar C, Fig. 2. I preferably use four springs S, each extending between one of the projections *h* of the collar C and the adjacent abutment *i'* of the fly-wheel F. Each pair of springs thus affords an elastic and resilient connection for resisting relative movement of the fly-wheel and shaft in either direction. To guide the springs in the chambers *i*, I preferably employ a ring *n*, which is shown as formed in two parts and as held within the chambers *i* by suitable bolts *o*. The webs *i'* are preferably recessed to receive the ring *n*, as shown in Fig. 3, which is thus held centrally within the chambers *i i*. Each of the springs S encircles the ring *n* with a loose fit, so that while held in its appropriate chamber *i*, out of contact with the walls of the latter, it may move freely along the ring when compressed or extended by relative displacement of the fly-wheel and shaft. This relative movement is limited by shoulders *m m*, formed upon the fly-wheel, which extend into the path of the projections *h h*. The relative displacement thus provided for should be such that if the fly-wheel were held stationary the shaft could be turned enough to displace the armature from one field-pole to the next. The stops limit the compression or stress which may be applied to the springs S S, and thereby prevent overstraining the springs.

The device provided by my present invention is exceedingly efficient and practically free from danger of breakage.

It will be understood that the chambers *i i* might be formed in the collar C instead of the hub of the fly-wheel with as good results. This and other similar modifications are, however, within the scope of my invention, which is not limited to the exact construction shown.

With the construction described the load imposed during periods of speed variation is (in addition to unavoidable friction) proportional to the compression of the springs, and this compression during the period of lagging is given back by the expansion of the springs during a succeeding period of acceleration, so that the load necessary to suppress pumping is economized.

Instead of applying the fly-wheel directly on the armature-shaft it may be applied on any shaft driven therefrom.

It is to be understood that my improved device may be interposed at any point between the fly-wheel and motor, so long as it serves to produce the effect described.

Although for convenience of illustration I have hereinbefore described my invention in detail as applied to an alternating motor, it is to be understood that my invention is by no means limited to this specific application. In fact, it finds its greatest utility in its application to rotary converters of any of the ordinary types well known in the art, to which it is applied in precisely the manner hereinbefore described with particular reference to

though such rotary converter were specifically mentioned in lieu of the synchronous alternating motor, and Fig. 1 may be understood as specifically illustrating one type of such rotary converter.

By the term "fly-wheel" as used in this specification I include not merely such a wheel as a mechanic would ordinarily understand by this term, but also any suitably symmetrical mass or masses so mounted and adapted as to act in a manner substantially equivalent to the action of a fly-wheel—that is to say, by rotating with the motor and by reason of its inertia resisting any acceleration or retardation of its normal speed of rotation.

I claim as my invention the following-defined novel features, substantially as hereinbefore specified, namely:

1. The combination with a rotary motor, of a fly-wheel driven thereby, free to turn relatively thereto, a spring interposed between said fly-wheel and motor for producing the effect described, and a guide for said spring comprising a ring concentric with the axis of rotation of said fly-wheel.

2. The combination with a rotary motor, of a shaft rotating therewith, a fly-wheel driven by said shaft and free to turn relatively thereto, said fly-wheel having arc-shaped chambers, a collar fixed to said shaft having projections entering said chambers, coiled springs interposed between said projections and fly-wheel and inclosed in said chambers, and guides within said chambers for guiding said springs therein, comprising a ring fixed to said fly-wheel and concentric with the axis of rotation of the latter.

3. The combination with a rotary motor, of a shaft rotating therewith, a fly-wheel driven by said shaft and free to turn relatively thereto, said fly-wheel having two arc-shaped chambers, and shoulders between said chambers, a guide-ring extending within said chambers and fixed to said shoulders, a collar fixed to said shaft, and having projections entering within said chambers said projections embracing said ring, and four springs each encircling said ring, and at one end bearing against one of said shoulders, and at the other end bearing against one of said projections, whereby to resist relative movement in either direction of said fly-wheel and collar.

In witness whereof I have hereunto signed my name in the presence of two subscribing witnesses.

JAMES J. WOOD.

Witnesses:
A. L. HADLEY,
W. H. CRIGHTON.

tionable pumping action referred to. If the generator speed suddenly increases, the armature tends to correspondingly accelerate its speed; but the fly-wheel lags behind, thereby putting a slight load on the motor, and then when the generator slows down the motor-armature tends to run slower, while the fly-wheel, tending to run at a uniform speed, catches up with the motor-shaft and forces it ahead or resists its tendency to slow down, thereby again putting a slight load on the motor. I have already stated that putting a slight load on a synchronous motor extinguishes the pumping effect, this being equally true whether it is electrical, by weakening the field and taking extra current, or is mechanical, by throwing some additional work upon the motor. Such yieldingly-connected fly-wheel is of the latter order and has the effect of causing the motor to run without any pumping. Inasmuch as the load imposed by the fly-wheel is felt only at the instants when the variation in speed occurs, its effect in correcting the pumping is accompanied by less loss of energy than with a load which imposes a continuous drag on the motor.

In the accompanying drawings, Figure 1 is sectional elevation of a motor or other synchronous dynamo-electric machine provided with the preferred form of my invention. Fig. 2 is a face view of the fly-wheel, showing one-half of the shaft-collar in section on the line 2 2 in Fig. 3. Fig. 3 is a transverse section of the fly-wheel and collar in two planes, as denoted by the line 3 3 in Fig. 2.

In Fig. 1 I have shown what may, for example, be understood as an alternating motor of well-known type or as a rotary converter. In this figure, *f* is the field-magnet, A is the armature, *b* is the armature-shaft, *c c* are the collector-rings, and *d d* are the brushes leading the alternating current into these rings. I have shown this machine as constructed with a commutator *e* for feeding continuous current to brushes *g g* for the purpose of exciting the field-magnet; but these exciting connections not being material to my invention are not shown.

Referring to Fig. 1, on the armature-shaft *b* (or any other shaft driven therefrom) is mounted a fly-wheel F. The preferred construction is that shown in Figs. 1 to 3, where the fly-wheel F is loosely mounted upon a sleeve B, which itself is keyed or otherwise fixed upon the shaft. Attached to the shaft is a collar or flange C, which is preferably made in one piece with the sleeve B and which has one or more (preferably two) projections *h h*, each of which constitutes two opposed abutments. The fly-wheel F has preferably two arc-shaped chambers or grooves *i i*, which are formed in such manner as to leave webs or abutments *i' i'*. The chambers *i i* are adapted to receive the projections *h h* of the collar C and to inclose springs S, preferably coiled or helical springs, as best shown in Fig. 2. I preferably use four springs S, each extending between one of the projections *h* of the collar C and the adjacent abutment *i'* of the fly-wheel F. Each pair of springs thus affords an elastic and resilient connection for resisting relative movement of the fly-wheel and shaft in either direction. To guide the springs in the chambers *i*, I preferably employ a ring *n*, which is shown as formed in two parts and as held within the chambers *i* by suitable bolts *o*. The webs *i'* are preferably recessed to receive the ring *n*, as shown in Fig. 3, which is thus held centrally within the chambers *i i*. Each of the springs S encircles the ring *n* with a loose fit, so that while held in its appropriate chamber *i*, out of contact with the walls of the latter, it may move freely along the ring when compressed or extended by relative displacement of the fly-wheel and shaft. This relative movement is limited by shoulders *m m*, formed upon the fly-wheel, which extend into the path of the projections *h h*. The relative displacement thus provided for should be such that if the fly-wheel were held stationary the shaft could be turned enough to displace the armature from one field-pole to the next. The stops limit the compression or stress which may be applied to the springs S S, and thereby prevent overstraining the springs.

The device provided by my present invention is exceedingly efficient and practically free from danger of breakage.

It will be understood that the chambers *i i* might be formed in the collar C instead of the hub of the fly-wheel with as good results. This and other similar modifications are, however, within the scope of my invention, which is not limited to the exact construction shown.

With the construction described the load imposed during periods of speed variation is (in addition to unavoidable friction) proportional to the compression of the springs, and this compression during the period of lagging is given back by the expansion of the springs during a succeeding period of acceleration, so that the load necessary to suppress pumping is economized.

Instead of applying the fly-wheel directly on the armature-shaft it may be applied on any shaft driven therefrom.

It is to be understood that my improved device may be interposed at any point between the fly-wheel and motor, so long as it serves to produce the effect described.

Although for convenience of illustration I have hereinbefore described my invention in detail as applied to an alternating motor, it is to be understood that my invention is by no means limited to this specific application. In fact, it finds its greatest utility in its application to rotary converters of any of the ordinary types well known in the art, to which it is applied in precisely the manner hereinbefore described with particular reference to a synchronous motor. To this end the foregoing description may be understood as

though such rotary converter were specifically mentioned in lieu of the synchronous alternating motor, and Fig. 1 may be understood as specifically illustrating one type of such rotary converter.

By the term "fly-wheel" as used in this specification I include not merely such a wheel as a mechanic would ordinarily understand by this term, but also any suitably symmetrical mass or masses so mounted and adapted as to act in a manner substantially equivalent to the action of a fly-wheel—that is to say, by rotating with the motor and by reason of its inertia resisting any acceleration or retardation of its normal speed of rotation.

I claim as my invention the following-defined novel features, substantially as hereinbefore specified, namely:

1. The combination with a rotary motor, of a fly-wheel driven thereby, free to turn relatively thereto, a spring interposed between said fly-wheel and motor for producing the effect described, and a guide for said spring comprising a ring concentric with the axis of rotation of said fly-wheel.

2. The combination with a rotary motor, of a shaft rotating therewith, a fly-wheel driven by said shaft and free to turn relatively thereto, said fly-wheel having arc-shaped chambers, a collar fixed to said shaft having projections entering said chambers, coiled springs interposed between said projections and fly-wheel and inclosed in said chambers, and guides within said chambers for guiding said springs therein, comprising a ring fixed to said fly-wheel and concentric with the axis of rotation of the latter.

3. The combination with a rotary motor, of a shaft rotating therewith, a fly-wheel driven by said shaft and free to turn relatively thereto, said fly-wheel having two arc-shaped chambers, and shoulders between said chambers, a guide-ring extending within said chambers and fixed to said shoulders, a collar fixed to said shaft, and having projections entering within said chambers said projections embracing said ring, and four springs each encircling said ring, and at one end bearing against one of said shoulders, and at the other end bearing against one of said projections, whereby to resist relative movement in either direction of said fly-wheel and collar.

In witness whereof I have hereunto signed my name in the presence of two subscribing witnesses.

JAMES J. WOOD.

Witnesses:
A. L. HADLEY,
W. H. CRIGHTON.

942

F. E. HOLMAN.

PHONOGRAPH.

APPLICATION FILED DEC. 22, 1908.

939,692.

Patented Nov. 9, 1909.

Fig. 3.

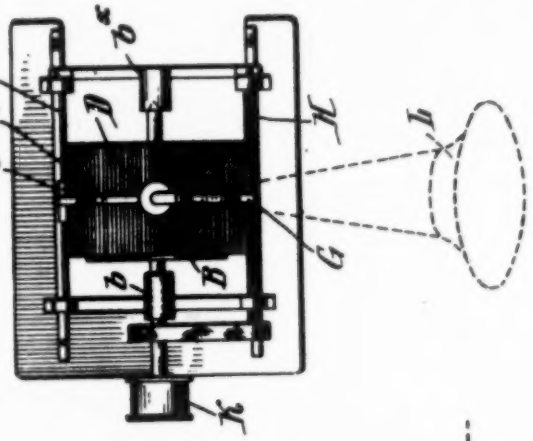

Fig. 2.

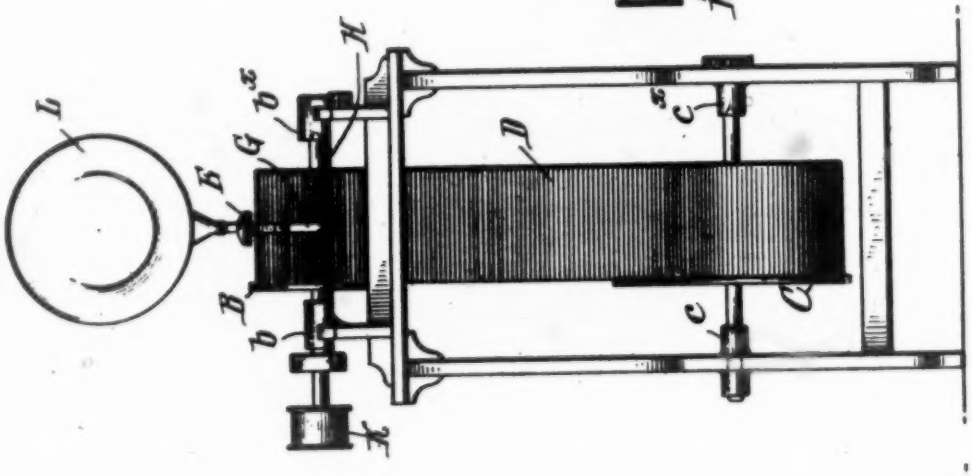

Fig. 1.

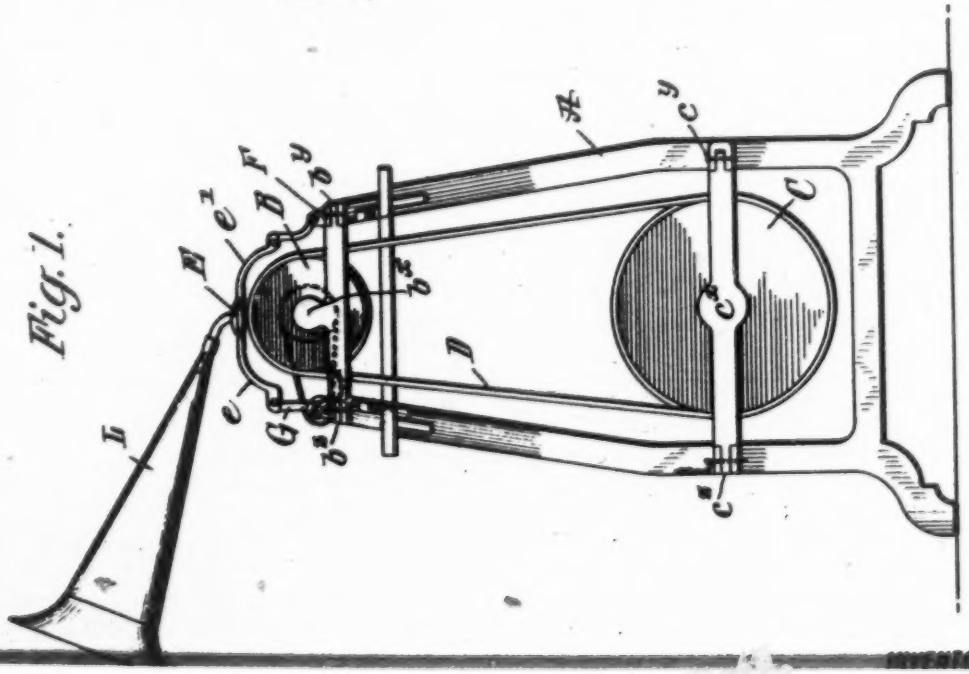

UNITED STATES PATENT OFFICE.

FRANK E. HOLMAN, OF SILVERTON, OREGON, ASSIGNOR OF ONE-HALF TO JOHN E. INNIS, OF SILVERTON, OREGON.

PHONOGRAPH.

939,692. Specification of Letters Patent. Patented Nov. 9, 1909.

Application filed December 22, 1908. Serial No. 468,815.

To all whom it may concern:

Be it known that I, FRANK E. HOLMAN, a citizen of the United States, and a resident of Silverton, in the county of Marion and State of Oregon, have made certain new and useful Improvements in Phonographs, of which the following is a specification.

My invention relates to improvements in means for increasing the available recording surface in phonographs, and it consists in the constructions, combinations and arrangements hereinafter described and claimed.

An object of my invention is to provide a phonograph in which a record surface of a flexible nature and having a relatively great length may be inserted or removed, and in which the bearing members for the cylinder are pivoted to admit the removal or replacement of the record.

A further object of my invention is to provide a record applicable to a cylinder type, in which the virtual diameter of the record is greatly increased, while the actual diameter is not.

Other objects and advantages will appear in the following specification and the novel features of the invention will be particularly pointed out in the appended claims.

My invention is illustrated in the accompanying drawings, in which—

Figure 1 shows an end view of a phonograph containing one embodiment of my invention. Fig. 2 shows a side view thereof, and Fig. 3 is a plan view.

In carrying out my invention I provide a frame A in which is supported the upper feed roller B having a flange b^x on one end and a lower roller C, having a similar flange c^x. These rollers are journaled in the bearings b and b^x and c and c^x, respectively, carried by the uprights of the frame A. The bearings b and c are elongated as shown in Fig. 2 in order to support their respective shafts when the cone bearings B^x and C^x are removed from the ends of the shaft. The cone bearings b^x and c^x are hinged to one of the uprights of the frame A at b^y and c^y, respectively, and may be locked at the opposite ends b^z and c^z, as clearly shown in Fig. 1. This construction is for the purpose of enabling the [illegible] which will permit a bending of the band or belt, such as the films of moving picture machines. A belt may be coated with a composition which will permit the making and keeping of the phonographic record. The belt may be made of any size and of a length corresponding to the height of the frame A. A longer belt would be used with a correspondingly higher frame, thus giving a greater record surface. The belt may be of any width, but in practice I find it preferable to use a belt with a virtual diameter of thirty-six inches and a width of six inches on a feed cylinder of approximately five inches in diameter. After the belt is slipped on, the slack may be adjusted to the proper degree by a movement of the upper part of the frame relatively to the lower or by a movement of the bearings of one of the rollers. The roller C may be of any convenient diameter and serves merely as an idler.

The diaphragm E may be any standard diaphragm and is preferably supported by means of the arms e and e'. The arm e' is provided with a guide sleeve e^2 arranged to travel back and forth on the guide rod F. The arm e on the opposite side is provided with a feed member G arranged to coöperate with a feed screw H. The feed roller B may be driven by means of a belt (not shown) running over a drive pulley K, by any suitable power. The diaphragm may be provided with the usual horn or sound intensifier L.

From the foregoing description of the various parts of the device the operation thereof may be readily understood. When the machine is assembled in the manner already indicated and the needle is placed at one edge of the continuous band, the rotation of the feed cylinder 5 will cause the belt 9 to move under the needle and the action of the feed screw will cause the needle to be shifted longitudinally of the belt. It will thus be seen that with a feed cylinder, say of five inches diameter, the effect of an endless belt traveling over said cylinder will be that of a cylinder of a virtual diameter equaling that of the belt, thereby giving a much larger record surface without much increase in the

F. E. HOLMAN.

PHONOGRAPH.

APPLICATION FILED DEC. 22, 1908.

939,692.

Patented Nov. 9, 1909.

Fig. 3.

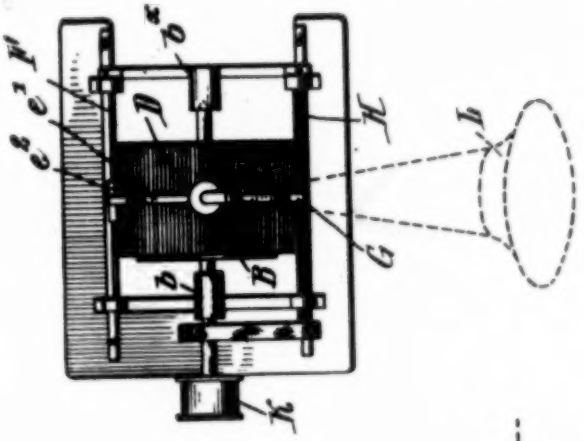

Fig. 2.

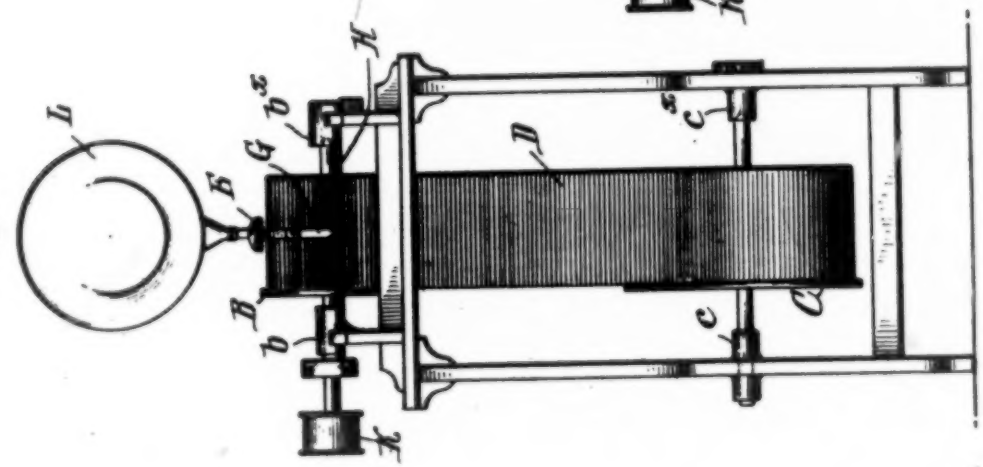

Fig. 1.

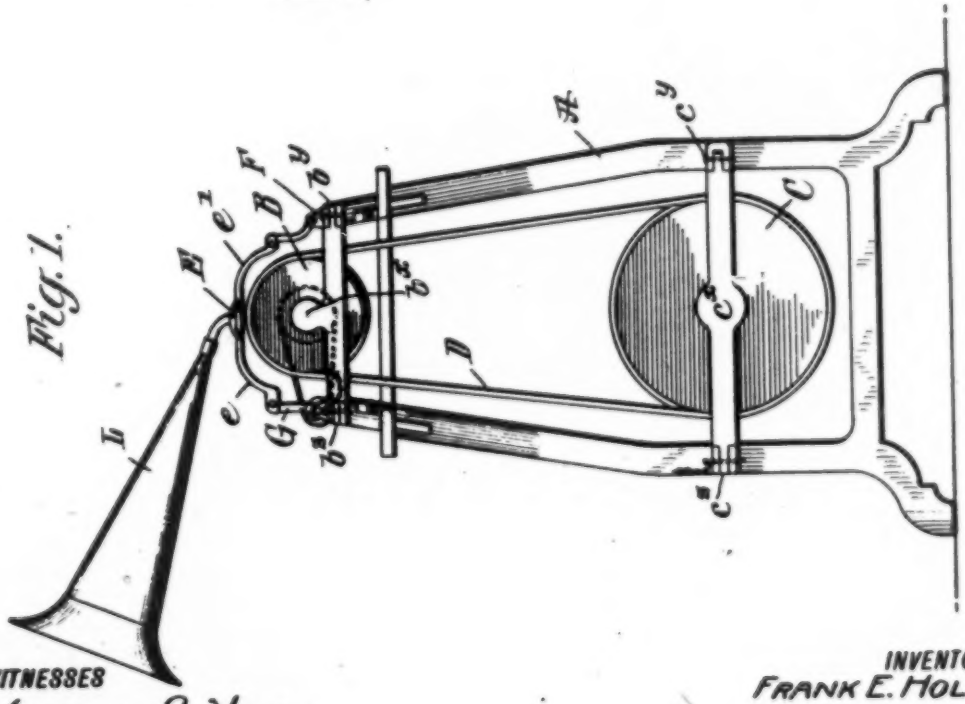

WITNESSES

Samuel E. Wade

Lester A. Stanley

INVENTOR

FRANK E. HOLMAN

BY Munn & Co.

ATTORNEYS

FRANK E. HOLMAN, OF SILVERTON, OREGON, ASSIGNOR OF ONE-HALF TO JOHN E. INNIS, OF SILVERTON, OREGON.

PHONOGRAPH.

939,692. Specification of Letters Patent. Patented Nov. 9, 1909.

Application filed December 22, 1908. Serial No. 468,815.

To all whom it may concern:

Be it known that I, FRANK E. HOLMAN, a citizen of the United States, and a resident of Silverton, in the county of Marion and State of Oregon, have made certain new and useful Improvements in Phonographs, of which the following is a specification.

My invention relates to improvements in means for increasing the available recording surface in phonographs, and it consists in the constructions, combinations and arrangements hereinafter described and claimed.

An object of my invention is to provide a phonograph in which a record surface of a flexible nature and having a relatively great length may be inserted or removed, and in which the bearing members for the cylinder are pivoted to admit the removal or replacement of the record.

A further object of my invention is to provide a record applicable to a cylinder type, in which the virtual diameter of the record is greatly increased, while the actual diameter is not.

Other objects and advantages will appear in the following specification and the novel features of the invention will be particularly pointed out in the appended claims.

My invention is illustrated in the accompanying drawings, in which—

Figure 1 shows an end view of a phonograph containing one embodiment of my invention. Fig. 2 shows a side view thereof, and Fig. 3 is a plan view.

In carrying out my invention I provide a frame A in which is supported the upper feed roller B having a flange b^x on one end and a lower roller C, having a similar flange c^x. These rollers are journaled in the bearings b and b^x and c and c^x, respectively, carried by the uprights of the frame A. The bearings b and c are elongated as shown in Fig. 2 in order to support their respective shafts when the cone bearings B^x and C^x are removed from the ends of the shaft. The cone bearings b^x and c^x are hinged to one of the uprights of the frame A at b^y and c^y, respectively, and may be locked at the opposite ends b^z and c^z, as clearly shown in Fig. 1. This construction is for the purpose of enabling the assembling of these cylinders and also for slipping on the flexible record D.

The flexible record D is preferably an endless band composed of any suitable material which will permit a bending of the band or belt, such as the films of moving picture machines. A belt may be coated with a composition which will permit the making and keeping of the phonographic record. The belt may be made of any size and of a length corresponding to the height of the frame A. A longer belt would be used with a correspondingly higher frame, thus giving a greater record surface. The belt may be of any width, but in practice I find it preferable to use a belt with a virtual diameter of thirty-six inches and a width of six inches on a feed cylinder of approximately five inches in diameter. After the belt is slipped on, the slack may be adjusted to the proper degree by a movement of the upper part of the frame relatively to the lower or by a movement of the bearings of one of the rollers. The roller C may be of any convenient diameter and serves merely as an idler.

The diaphragm E may be any standard diaphragm and is preferably supported by means of the arms e and e'. The arm e' is provided with a guide sleeve e^2 arranged to travel back and forth on the guide rod F. The arm e on the opposite side is provided with a feed member G arranged to coöperate with a feed screw H. The feed roller B may be driven by means of a belt (not shown) running over a drive pulley K, by any suitable power. The diaphragm may be provided with the usual horn or sound intensifier L.

From the foregoing description of the various parts of the device the operation thereof may be readily understood. When the machine is assembled in the manner already indicated and the needle is placed at one edge of the continuous band, the rotation of the feed cylinder 5 will cause the belt 9 to move under the needle and the action of the feed screw will cause the needle to be shifted longitudinally of the belt. It will thus be seen that with a feed cylinder, say of five inches diameter, the effect of an endless belt traveling over said cylinder will be that of a cylinder of a virtual diameter equaling that of the belt, thereby giving a much larger record surface without much increase in the feed cylinder. Of course the feed screw H may be made to advance the needle transversely of the belt, *i. e.* longitudinally of the feed cylinder at any predetermined rate. By using a record belt of a virtual diameter

of thirty-six inches with ninety-six threads upon the feed screw for every inch in length of the feed cylinder (or width of the belt), we will obtain a record having a length approximately sixteen times the length of the ordinary cylinder record. Used at the same record speed of the ordinary cylinder machine, it will require nearly fifty-eight minutes time to reproduce this record.

In the effort to make phonographs of comparatively small size but with large record surface for use in connection with motion pictures, it will be at once apparent that this device furnishes a means for overcoming the obstacles in connection with the recording, or rather reproduction, of long speeches to correspond with, or accompany, the actions of the characters in the motion pictures. So also an opera of considerable length may be recorded by means of a machine equipped with my invention.

While I have shown this device as consisting of a frame of a special form, it will be understood that any frame suitable for the purpose may be used and that it may be made of iron or wood or other appropriate material. I am also aware that other forms of the device based upon the same general idea might be made but I consider as my own and desire to claim all such modifications as fairly fall within the spirit and scope of the invention.

I claim—

1. In a phonograph, a frame, a feed roller arranged in one end of said frame, an idler arranged in the other end of said frame, hinged bearings for said feed roller and said idler, a flexible recording surface carried by said feed roller and said idler, said recording surface consisting of an endless belt arranged to run on both of said rollers, and a stylus arranged to engage said recording surface.

2. In a phonograph, a frame provided with upper and lower stationary bearings, a feed roller mounted in said upper bearings, an idler mounted in said lower bearings, upper and lower hinged bearings carried by said frame and arranged to swing into alinement with the respective upper and lower stationary bearings and a flexible recording surface carried by said rollers.

3. In a phonograph, a frame provided with upper and lower stationary bearings, a shaft having a guide flange on the end of the roller adjacent the stationary bearing, a lower shaft journaled in said lower stationary bearing, an idler carried by said lower shaft and provided with a flange on the end adjacent the stationary bearing, and upper and lower hinged bearings carried by said frame and arranged to swing into alinement with their respective stationary bearings and adapted to engage the ends of the upper and lower shafts respectively.

FRANK E. HOLMAN.

Witnesses:
C. F. Webb,
P. L. Brown.

946

G. H. UNDERHILL.

SOUND REPRODUCING OR SOUND RECORDING MACHINE.

APPLICATION FILED MAY 6, 1905.

995,390.

Patented June 13, 1911.

6 SHEETS—SHEET 1.

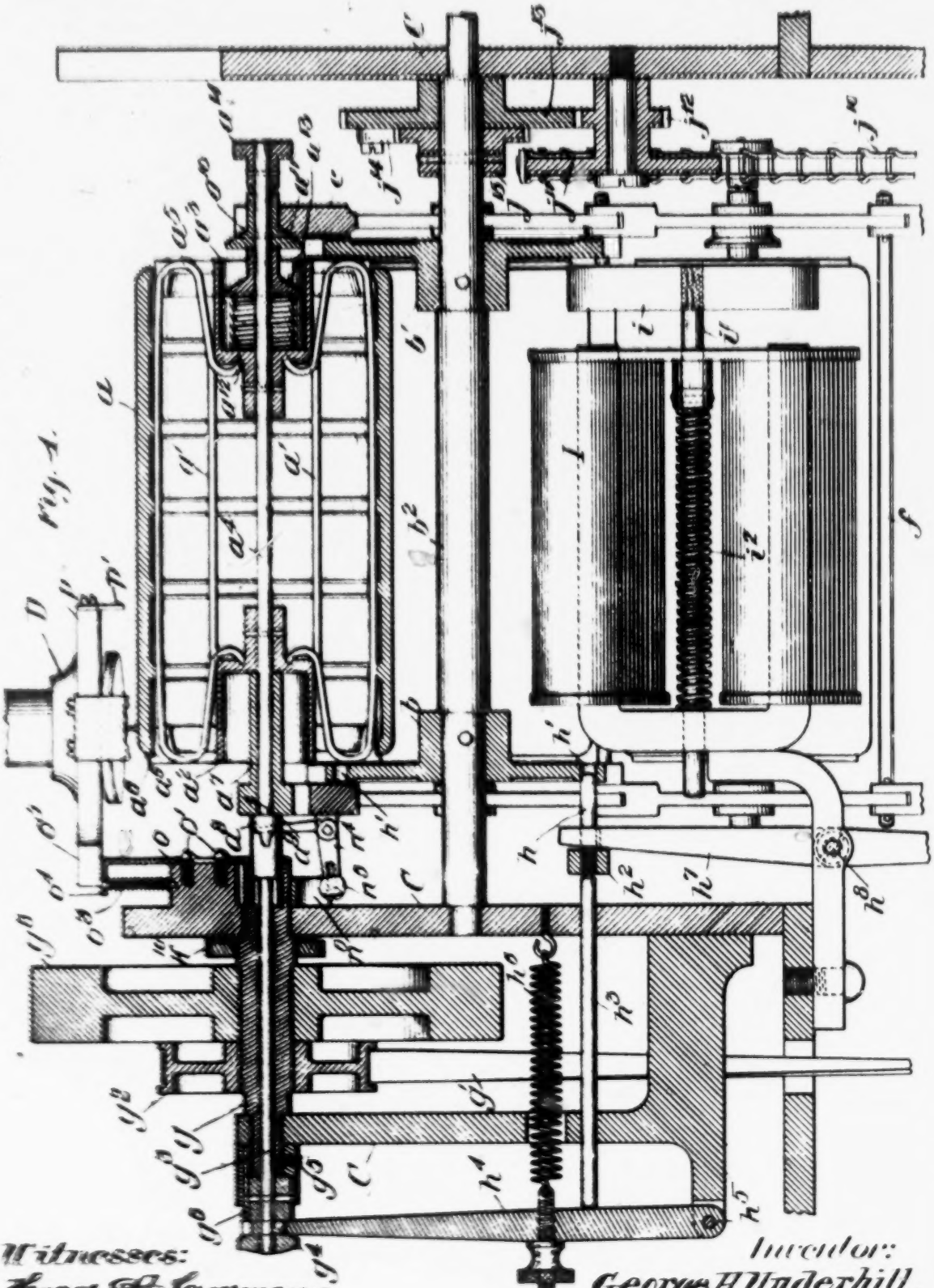

Witnesses:

Inventor:

George H. Underhill,

SOUND REPRODUCING OR SOUND RECORDING MACHINE.

APPLICATION FILED MAY 6, 1905.

995,390.

Patented June 13, 1911.

6 SHEETS—SHEET 1.

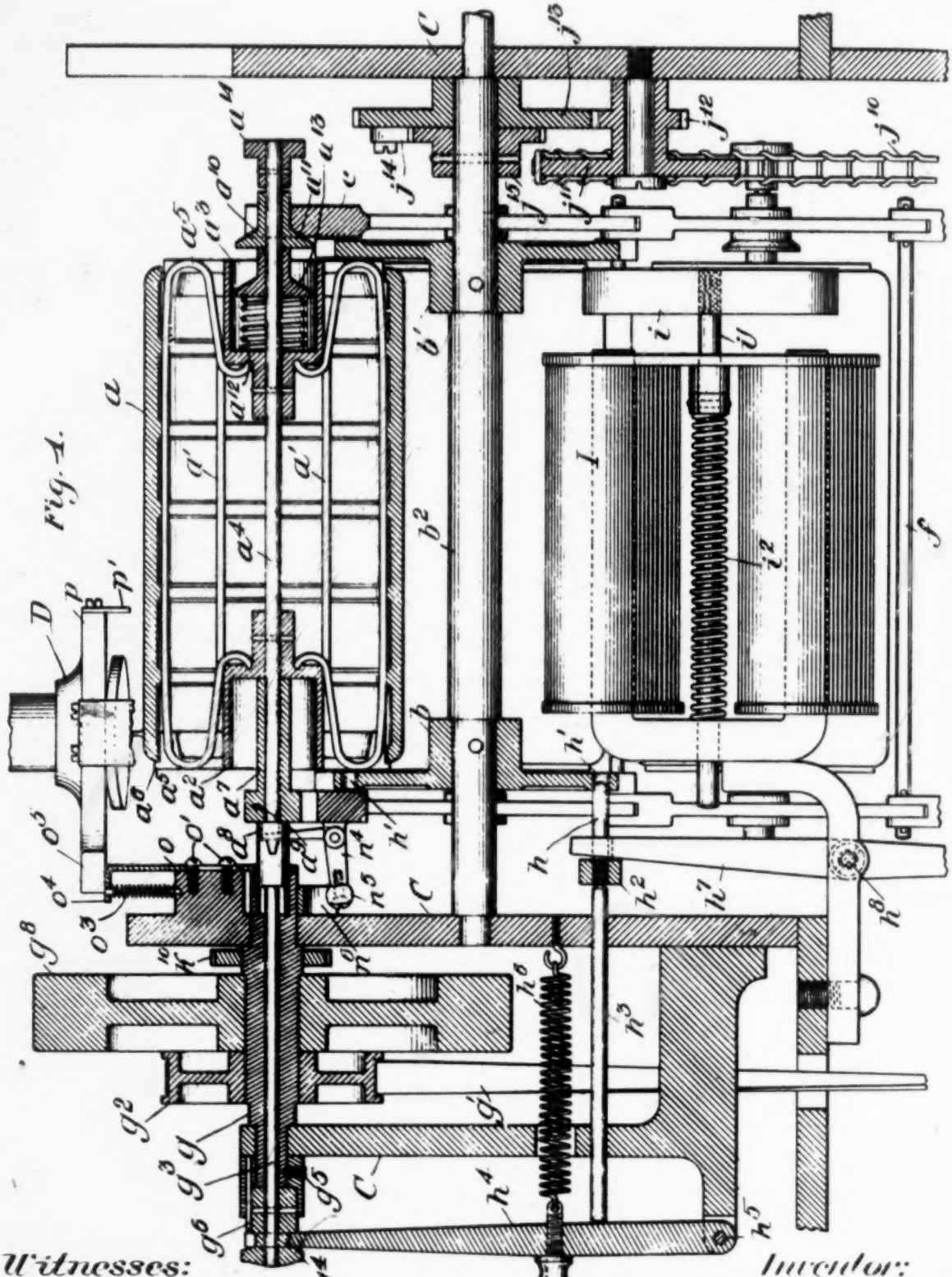

Fig. 1.

Witnesses:
Horace A. Grossman
Ernest L. Emery

Inventor:
George H. Underhill,
by Emery Booth Powell
Atty's.

948

G. H. UNDERHILL.

SOUND REPRODUCING OR SOUND RECORDING MACHINE.

APPLICATION FILED MAY 6, 1905.

995,390. Patented June 13, 1911.

6 SHEETS—SHEET 2.

Fig. 2.

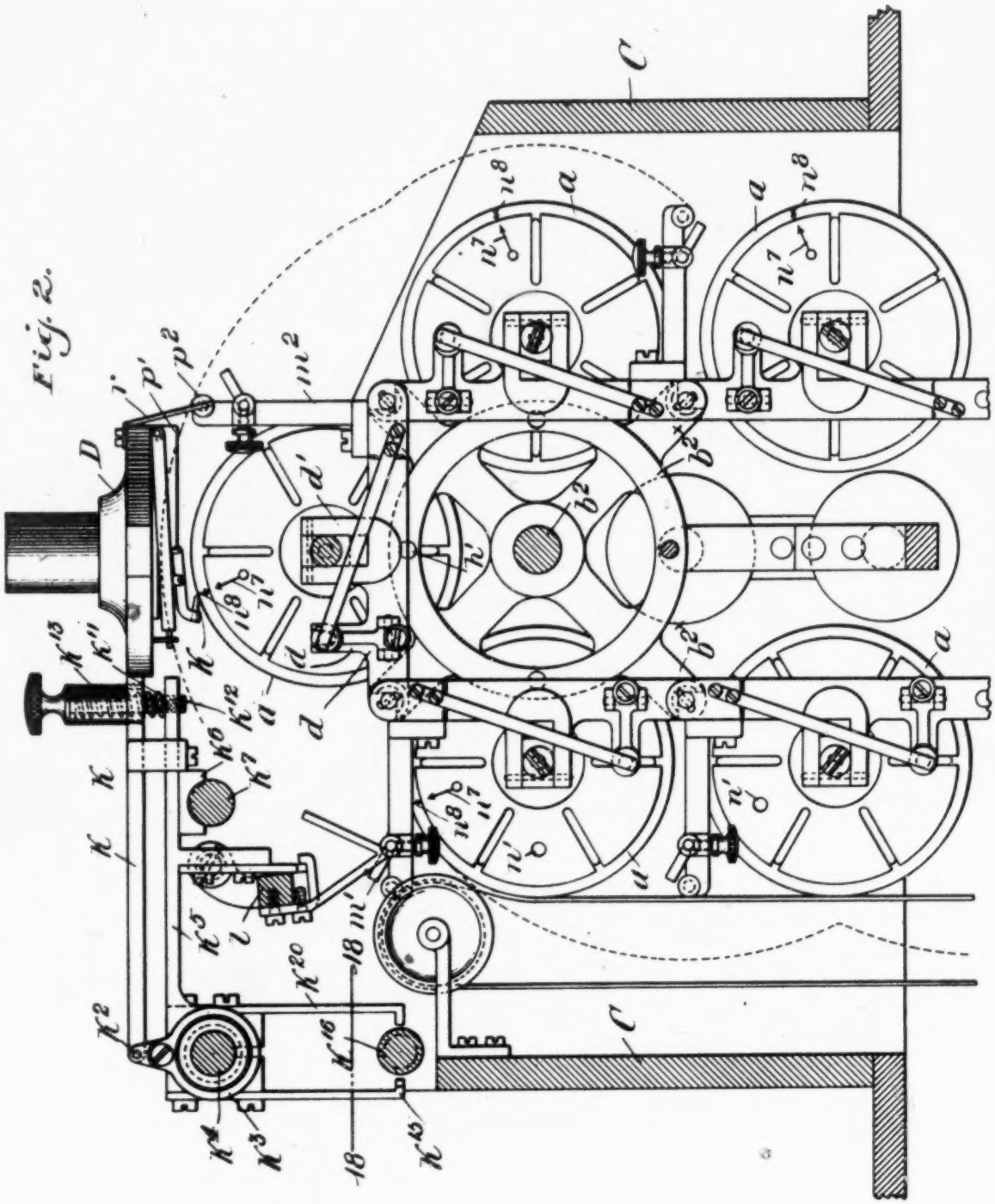

Witnesses:
Horace A. Crossman

Inventor:
George H. Underhill
by Emery Booth Powell

G. H. UNDERHILL.

SOUND REPRODUCING OR SOUND RECORDING MACHINE.

APPLICATION FILED MAY 6, 1905.

995,390. Patented June 13, 1911.

6 SHEETS—SHEET 2.

Fig. 2.

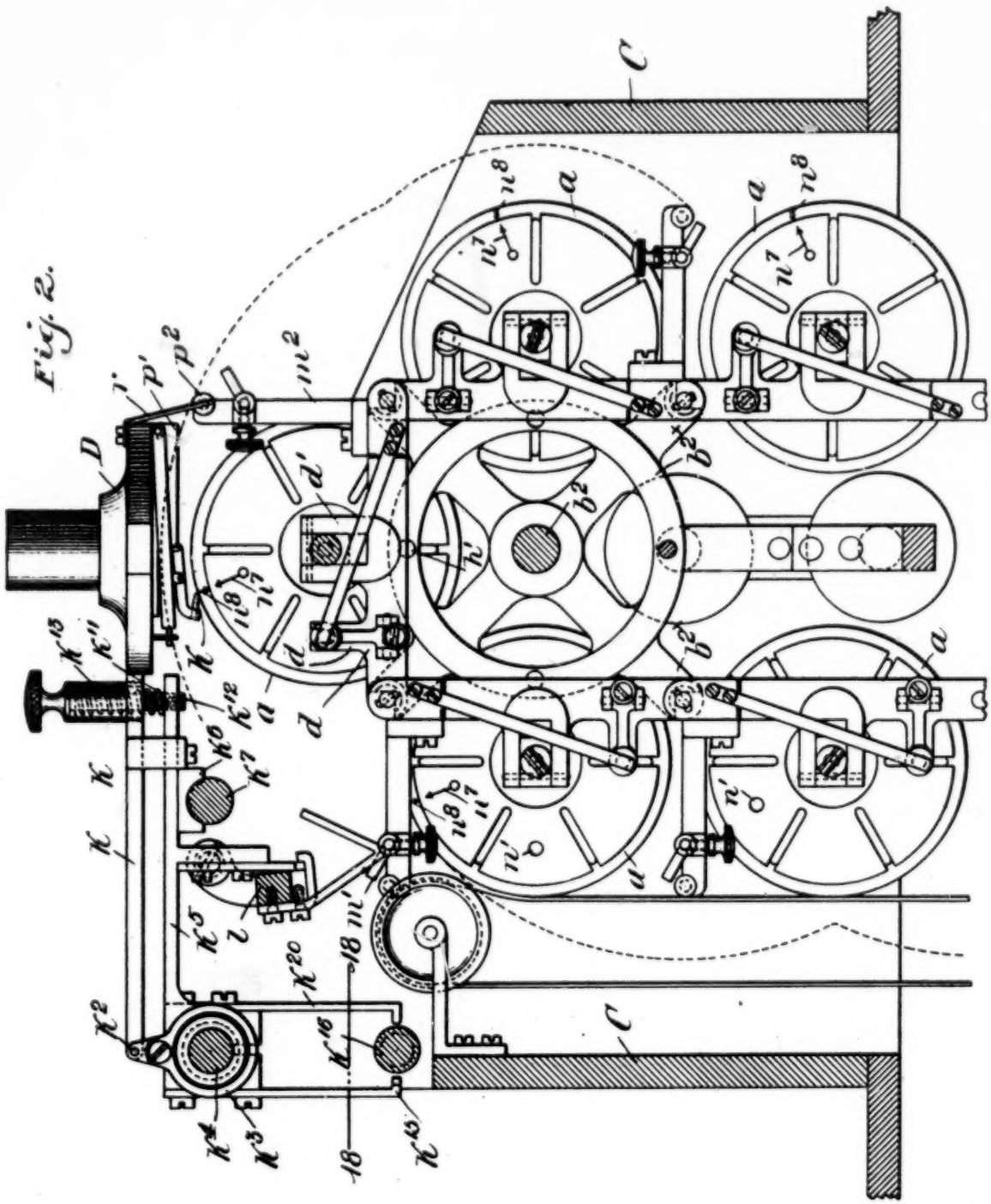

Witnesses:
Horace A. Crossman
Everett S. Emery

Inventor:
George H. Underhill
by Emery Booth & Powell
Attys

950

G. H. UNDERHILL.

SOUND REPRODUCING OR SOUND RECORDING MACHINE.

APPLICATION FILED MAY 6, 1905.

995,390. Patented June 13, 1911.

6 SHEETS—SHEET 3.

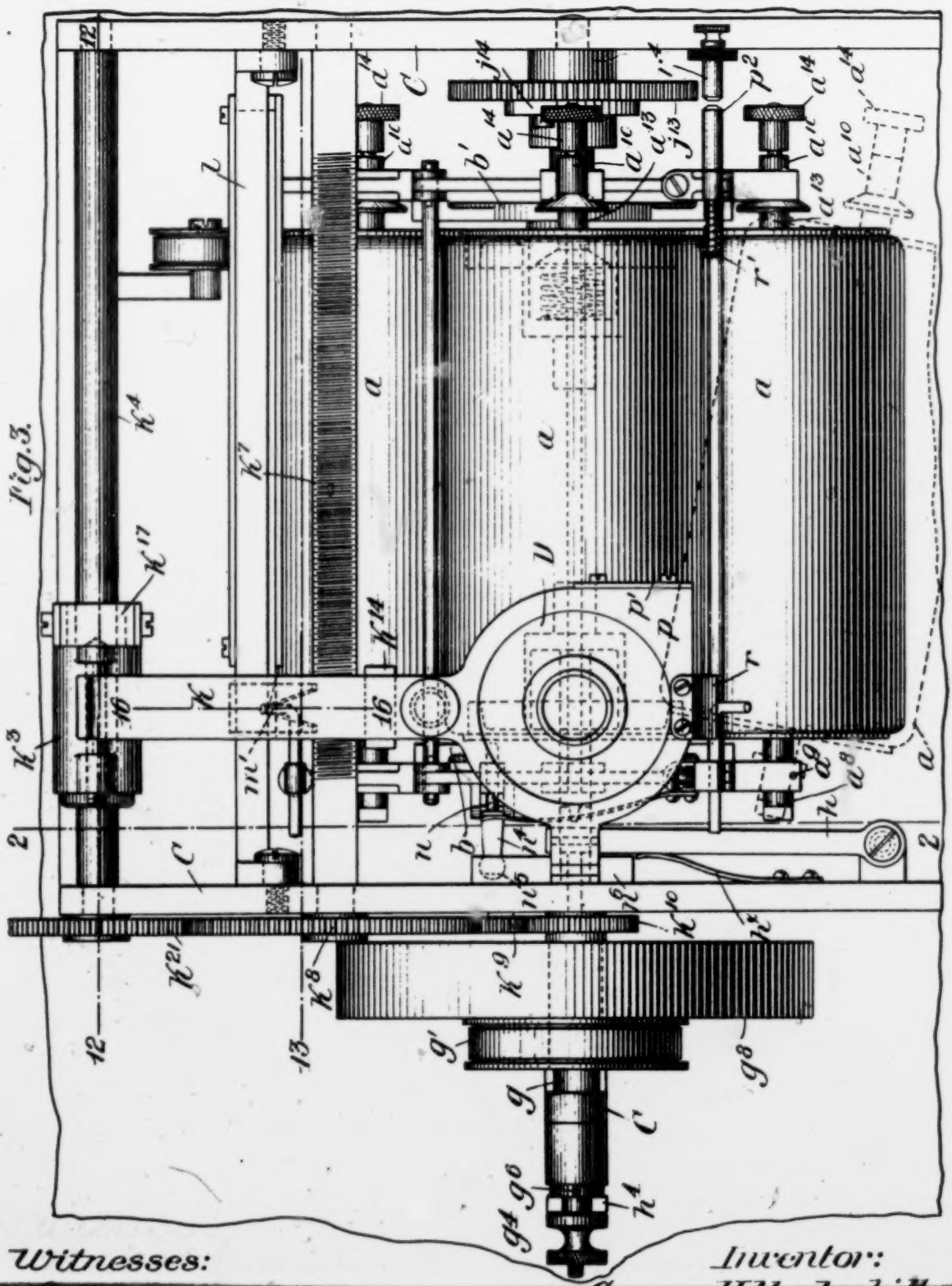

Fig. 3.

Witnesses:

Inventor:

G. H. UNDERHILL.

SOUND REPRODUCING OR SOUND RECORDING MACHINE.

APPLICATION FILED MAY 6, 1908.

995,390. Patented June 13, 1911.

6 SHEETS SHEET 3.

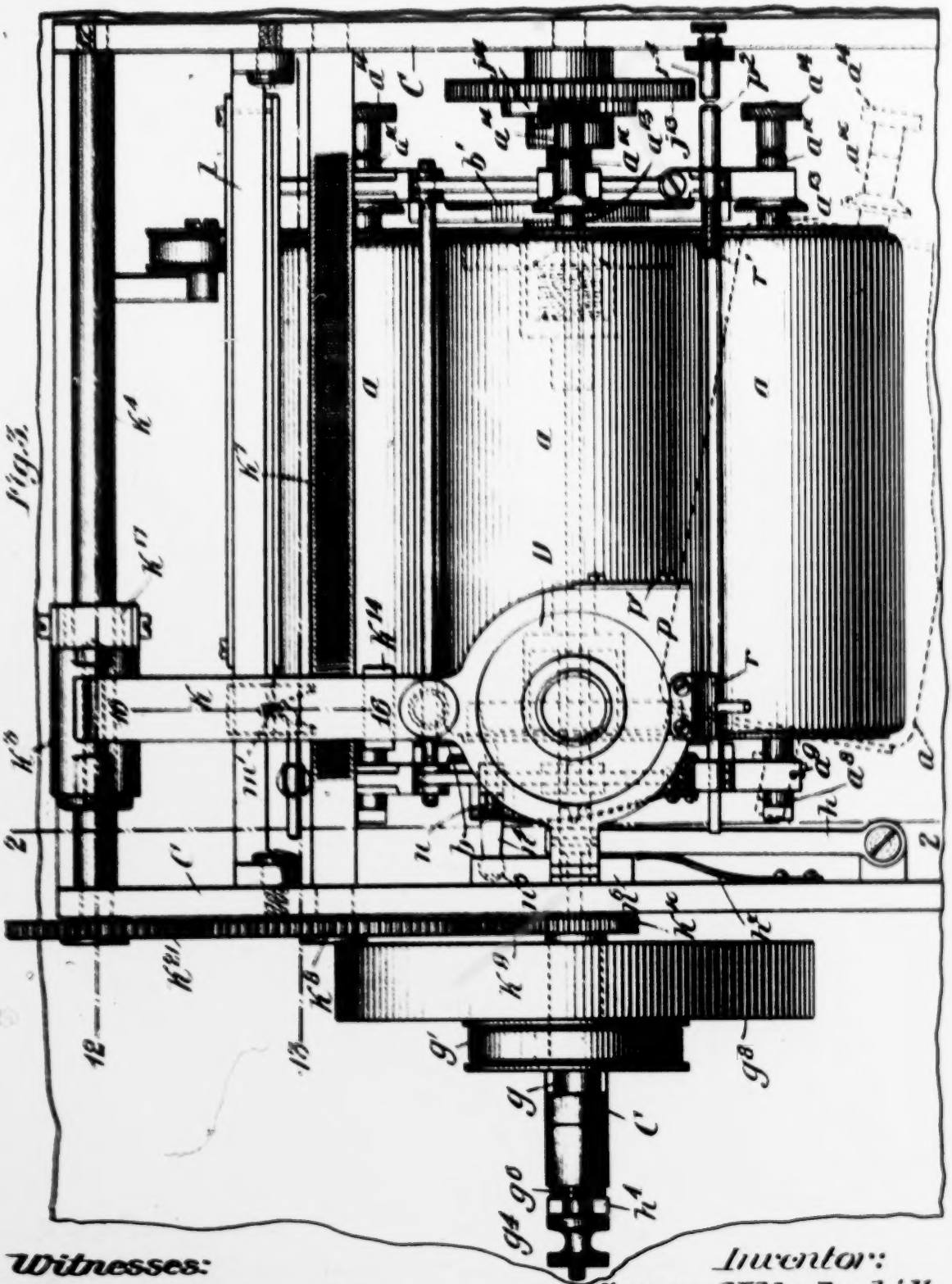

Witnesses:

Harold A. Crossman

Everett S. Emery

Inventor:

George H. Underhill,

by Emery Booth Powell

Att'ys

G. H. UNDERHILL.

SOUND REPRODUCING OR SOUND RECORDING MACHINE.

APPLICATION FILED MAY 6, 1905.

995,390. Patented June 13, 1911.

6 SHEETS—SHEET 4.

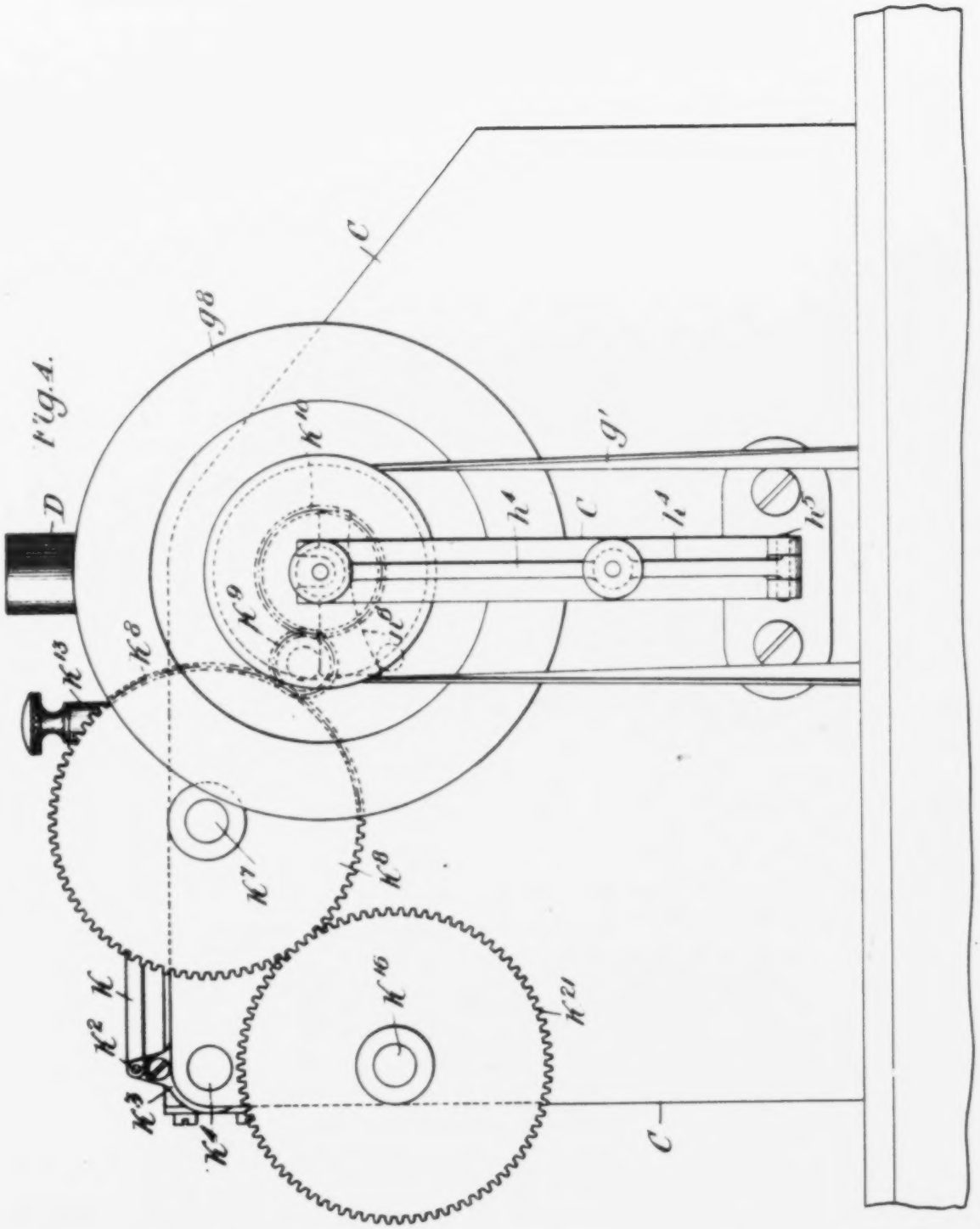

Witnesses:

Inventor:

Harriett Underhill.

G. H. UNDERHILL.

SOUND REPRODUCING OR SOUND RECORDING MACHINE.

APPLICATION FILED MAY 6, 1905.

995,390.

Patented June 13, 1911.

6 SHEETS—SHEET 4.

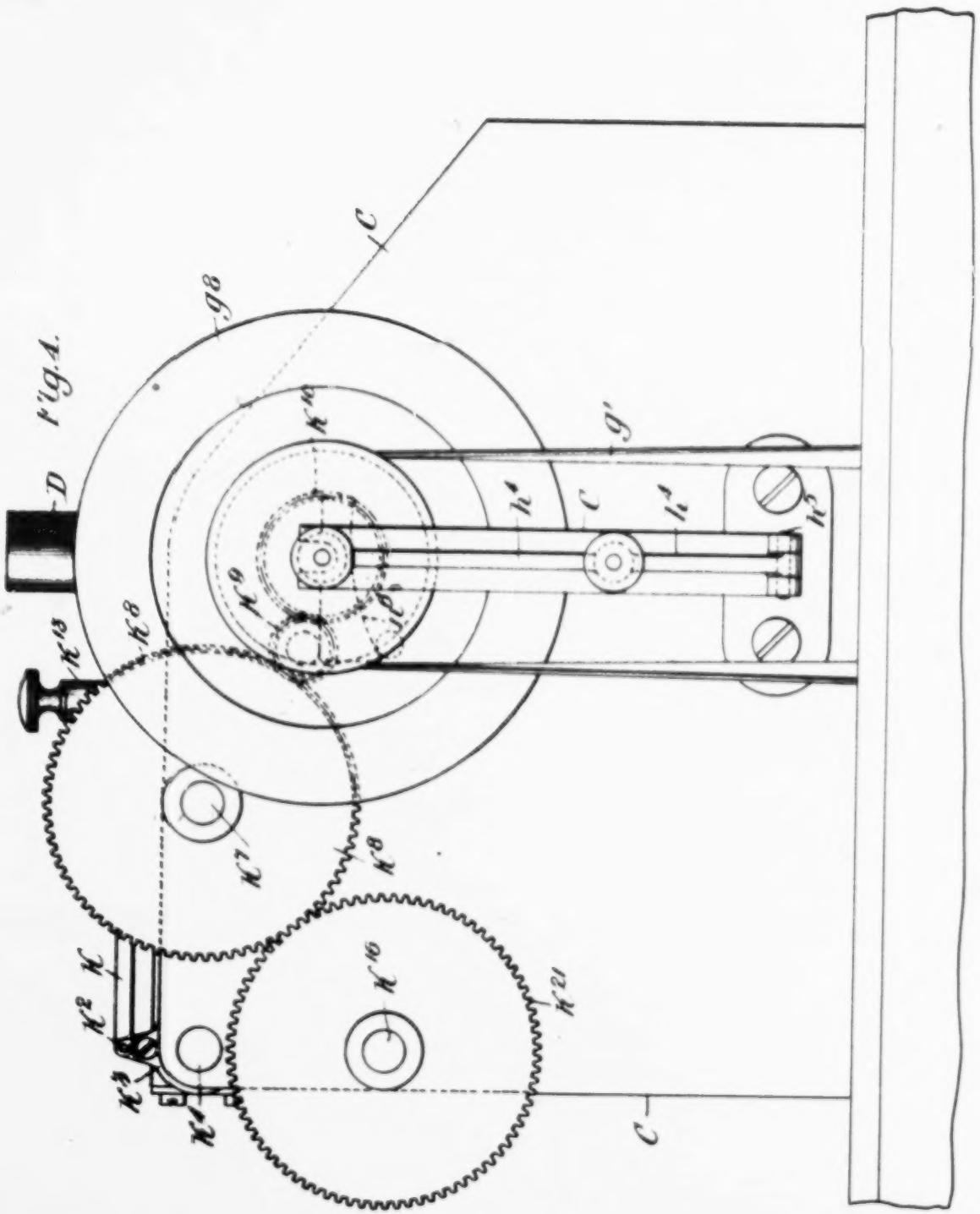

Fig. 4.

Witnesses:
Grace A. Eastman
Everett L. Emery.

Inventor:
George H. Underhill,
by Emery Booth & Powell
Attys

954

G. H. UNDERHILL.

SOUND REPRODUCING OR SOUND RECORDING MACHINE.

APPLICATION FILED MAY 6, 1905.

995,390. Patented June 13, 1911.

6 SHEETS—SHEET 5.

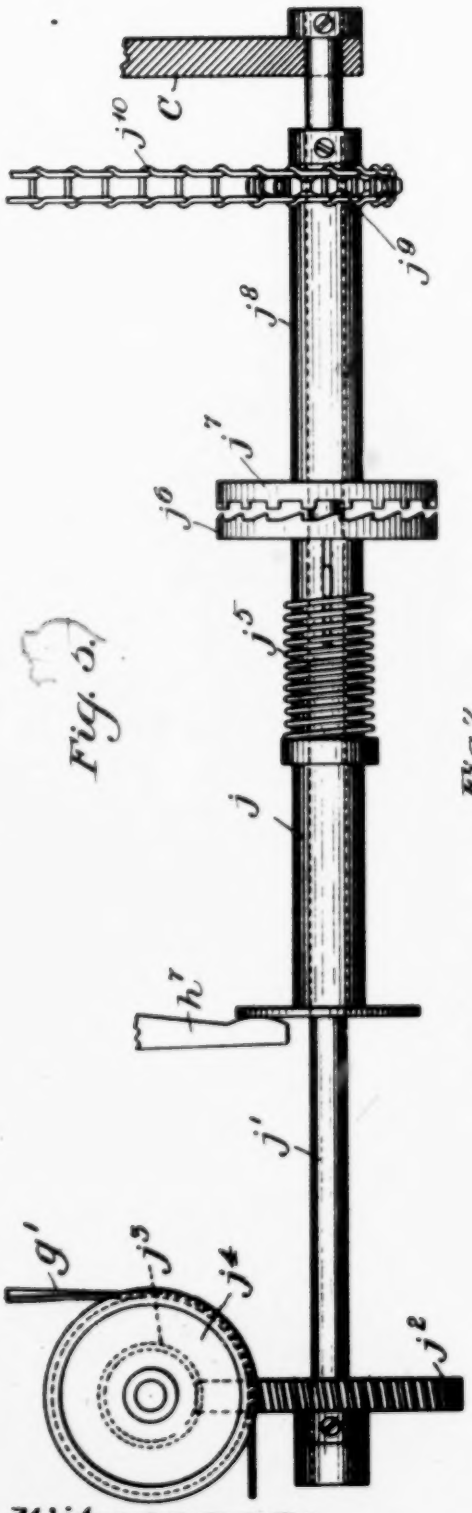

Fig. 5.

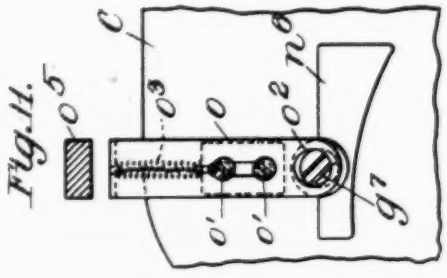

Fig. 11.

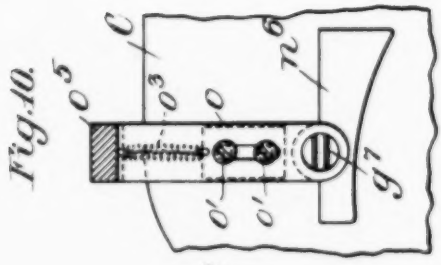

Fig. 10.

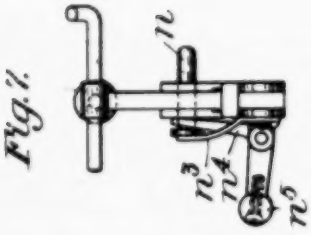

Fig. 7.

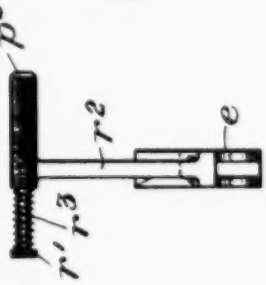

Fig. 9.

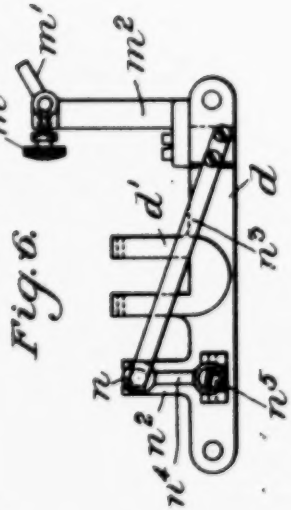

Fig. 6.

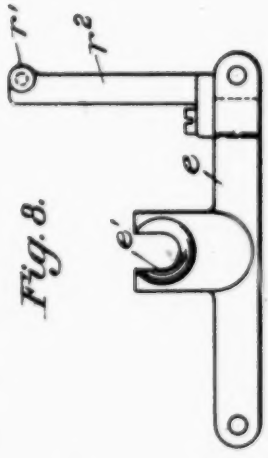

Fig. 8.

Witnesses:

Lucy A. Crossman

Inventor:

George H. Underhill.

SOUND REPRODUCING OR SOUND RECORDING MACHINE.

APPLICATION FILED MAY 6, 1905.

995,390.

Patented June 13, 1911.

6 SHEETS—SHEET 5.

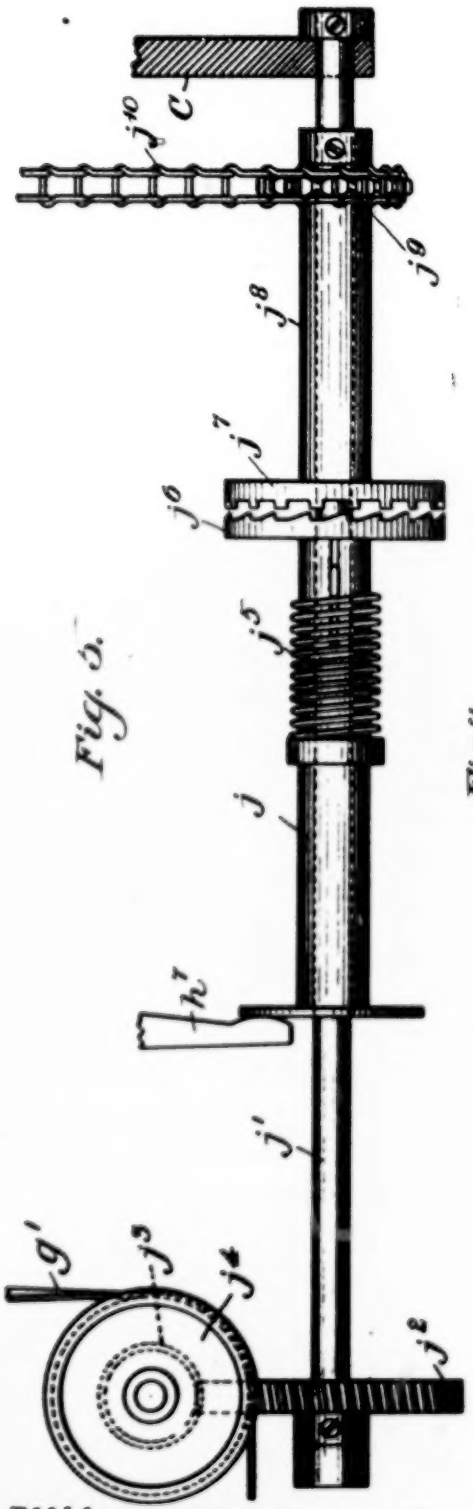

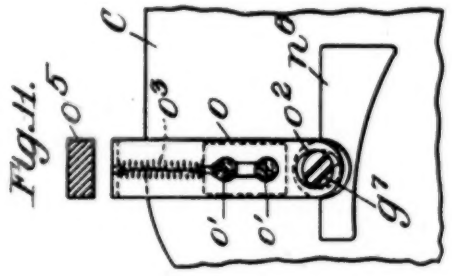

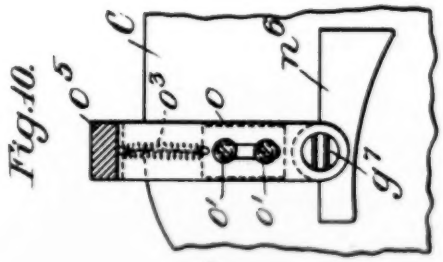

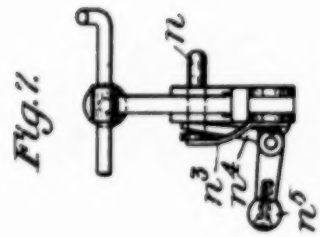

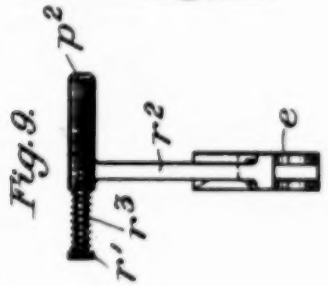

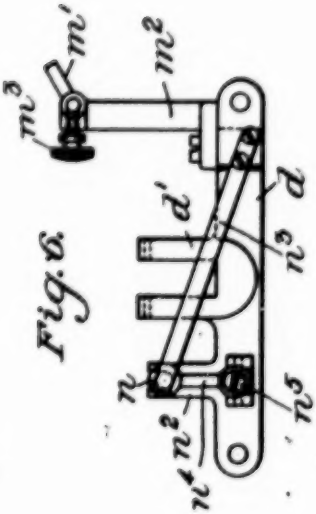

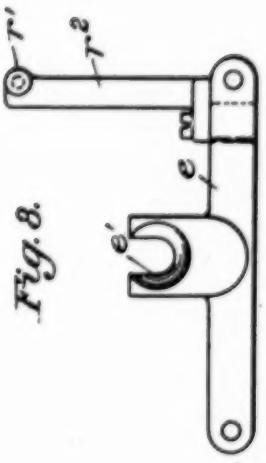

Witnesses:
Horace A. Crossman.
Everett L. Emery

Inventor:
George H. Underhill.
by Emery Booth Powell
Attys.

G. H. UNDERHILL.

SOUND REPRODUCING OR SOUND RECORDING MACHINE.

APPLICATION FILED MAY 6, 1905.

995,390. Patented June 13, 1911.

6 SHEETS—SHEET 6.

Fig. 12.

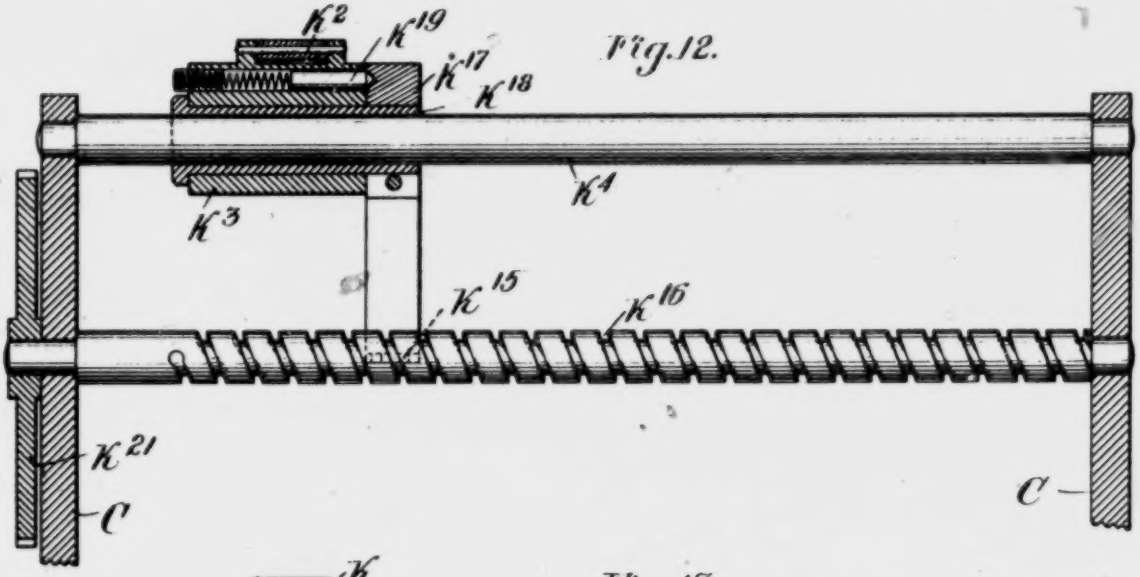

Fig. 13.

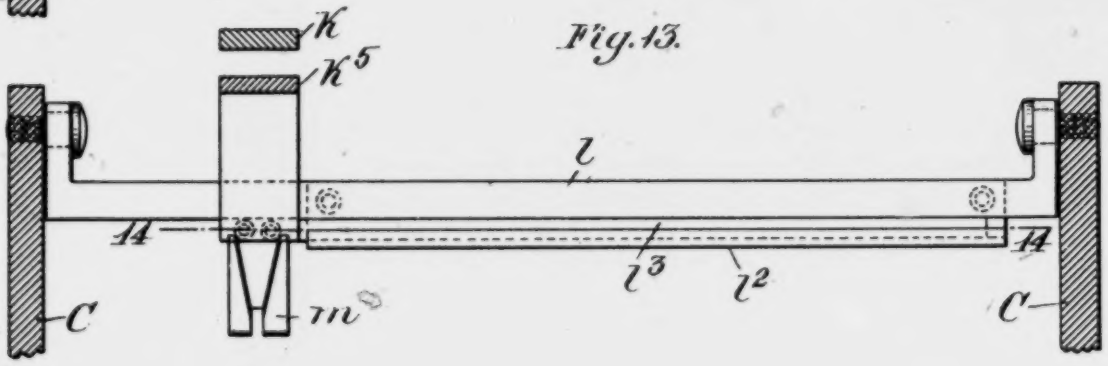

Fig. 15.

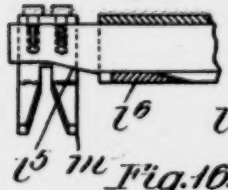

Fig. 14.

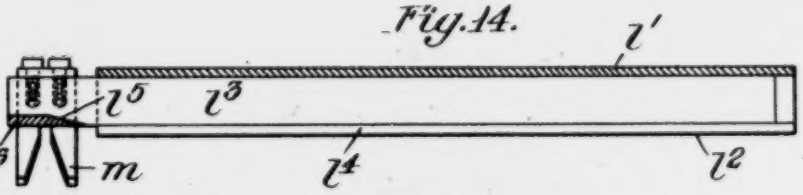

Fig. 16.

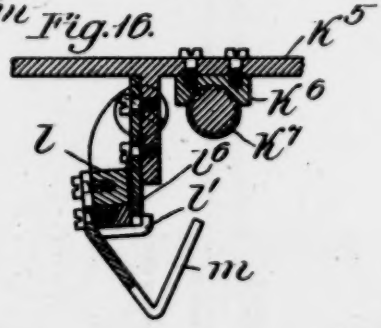

Fig. 17.

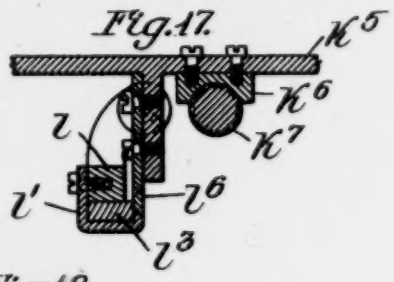

Fig. 18.

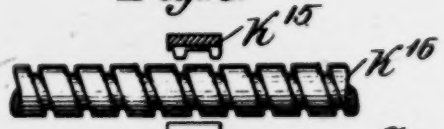

Witnesses:

Inventor:

George H. Underhill.

UNITED STATES PATENT OFFICE.

GEORGE H. UNDERHILL, OF BOSTON, MASSACHUSETTS.

SOUND-REPRODUCING OR SOUND-RECORDING MACHINE.

995,390. Specification of Letters Patent. Patented June 13, 1911.

Application filed May 6, 1905. Serial No. 259,107.

To all whom it may concern:

Be it known that I, GEORGE H. UNDERHILL, a citizen of the United States, residing at Boston, in the county of Suffolk and State of Massachusetts, have invented an Improvement in Sound-Reproducing or Sound-Recording Machines, of which the following description, in connection with the accompanying drawings, is a specification, like letters on the drawings representing like parts.

My invention consists in improvements in sound reproducing or sound recording machines.

Many features of my invention have a useful application to many different types of such machines, including single record machines, but my invention on the whole is particularly applicable, and is herein illustrated with reference, to one type of multiple record machine having a plurality of cylindrical records supported by a linked carrying member, such records being automatically and successively brought into reproducing or recording relation to suitable reproducing or recording mechanism, the latter being caused to automatically traverse the face of each record as the same is presented.

My invention will be best understood by reference to the following description taken in connection with the accompanying illustration of one specific embodiment, while its scope will be more particularly pointed out in the appended claims.

In the drawings,—Figure 1 is a central sectional elevation of a portion of a sound reproducing machine embodying one form of my invention; Fig. 2 is a side elevation partly in section showing the machine of Fig. 1; Fig. 3 is a plan view partially broken away of the machine shown in Figs. 1 and 2; Fig. 4 is an end elevation of the machine shown in Fig. 1 looking from the left; Fig. 5 is an elevation of the underlying sprocket-wheel driving shaft arranged on the central plane of the machine but omitted from Fig. 1 through lack of space; Figs. 6 and 7 show in side view and end elevation respectively the construction of the inside links of the record carrying member or those links at [illegible] in Figs. 1 and 2; Figs. 8 and 9 show sound box clutch controller in its clutched and unclutched positions respectively; Fig. 12 is a sectional elevation showing the construction of the sound box carriage and the return screw; Fig. 13 is a vertical section showing the depending sliding shoe at the end of the plate; Fig. 14 is a plan view in section on the line 14—14 of Fig. 13; Fig. 15 is a similar but fragmentary view showing the depending shoe during its return movement; Fig. 16 is a sectional elevation showing the shoe in a position corresponding to that shown in Fig. 14; Fig. 17 is a section showing the shoe in elevation in a position corresponding to that shown in Fig. 15; and, Fig. 18 is a section on the line 18—18, in Fig. 2, showing the construction of the nut which engages the sound box return screw.

In the drawings for illustrative purposes I have shown the various features of my invention embodied in a multiple record phonograph having (Figs. 1 and 2) a series of record cylinders *a* journaled each upon the linked members of a pair of record-carrying chains passing over the separated sprocket wheels *b* and *b'* the latter fixed to rotate with the sprocket driving shaft b^2 which is mounted in the frame C of the machine, said records being brought one by one into an operative position beneath the sound reproducing mechanism D as the shaft b^2 is given an intermittent turning movement.

Referring first to the mounting of the individual records, there is provided an improved simple construction of support of minimum weight, but permitting the contraction of the record, under changes in temperature without fracture or other injury to the same, as well as the expansion of the record without loosening its grasp upon the support.

Referring more particularly to Figs. 1 and 2, support for the cylinder *a* is afforded by a series of elastic members *a'* arranged lengthwise the mandrel and radially with reference to the axis thereof, these being sufficient in number to accurately center the cylinder, while presenting to the core thereof a series of gripping members which are freely yieldable inwardly on contraction of

SOUND REPRODUCING OR SOUND RECORDING MACHINE.

APPLICATION FILED MAY 6, 1905.

995,390. Patented June 13, 1911.

6 SHEETS—SHEET 6.

Fig. 12.

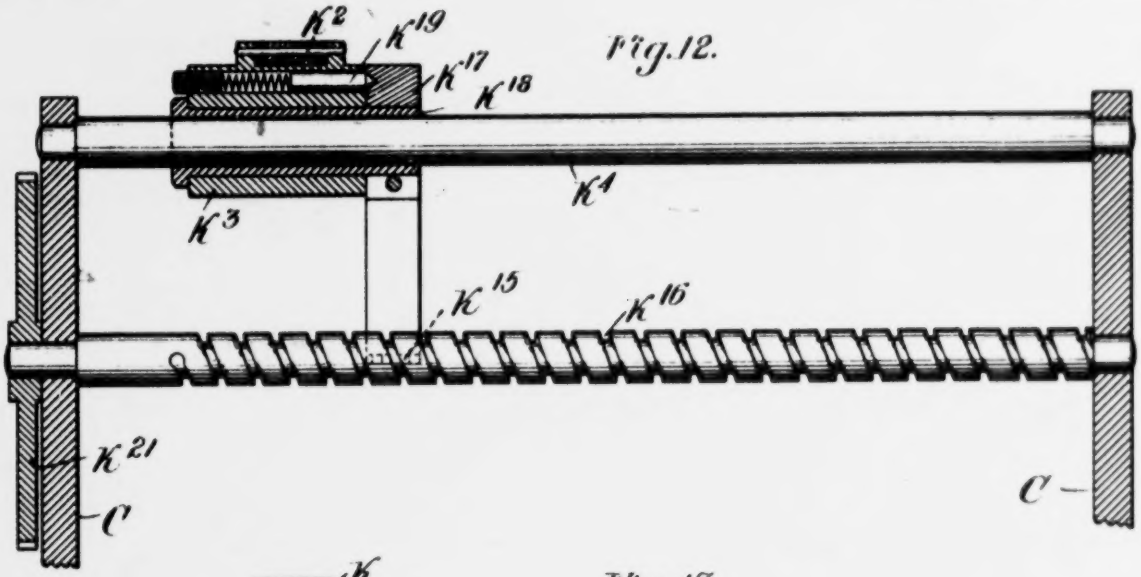

Fig. 13.

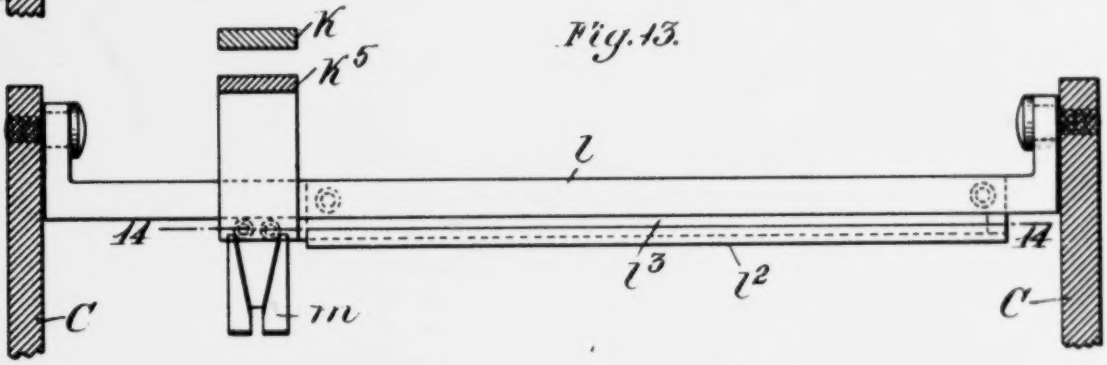

Fig. 15.

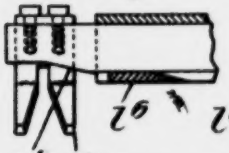

Fig. 14.

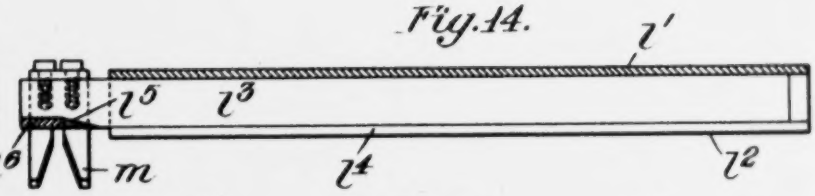

Fig. 16.

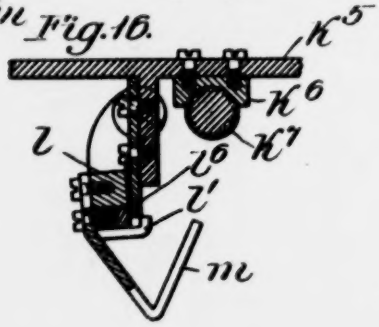

Fig. 17.

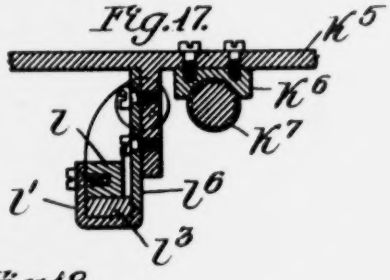

Fig. 18.

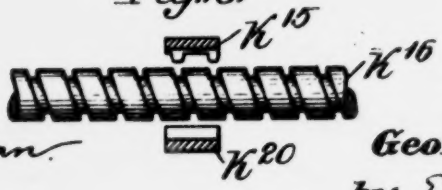

Witnesses:
Horace A. Crossman
Emmett S. Emery.

Inventor:
George H. Underhill
by Emery Booth Powell
Attys.

UNITED STATES PATENT OFFICE.

GEORGE H. UNDERHILL, OF BOSTON, MASSACHUSETTS.

SOUND-REPRODUCING OR SOUND-RECORDING MACHINE.

993,390. Specification of Letters Patent. Patented June 13, 1911.

Application filed May 6, 1905. Serial No. 259,107.

To all whom it may concern:

Be it known that I, GEORGE H. UNDERHILL, a citizen of the United States, residing at Boston, in the county of Suffolk and State of Massachusetts, have invented an Improvement in Sound-Reproducing or Sound-Recording Machines, of which the following description, in connection with the accompanying drawings, is a specification, like letters on the drawings representing like parts.

My invention consists in improvements in sound reproducing or sound recording machines.

Many features of my invention have a useful application to many different types of such machines, including single record machines, but my invention on the whole is particularly applicable, and is herein illustrated with reference, to one type of multiple record machine having a plurality of cylindrical records supported by a linked carrying member, such records being automatically and successively brought into reproducing or recording relation to suitable reproducing or recording mechanism, the latter being caused to automatically traverse the face of each record as the same is presented.

My invention will be best understood by reference to the following description taken in connection with the accompanying illustration of one specific embodiment, while its scope will be more particularly pointed out in the appended claims.

In the drawings,—Figure 1 is a central sectional elevation of a portion of a sound reproducing machine embodying one form of my invention; Fig. 2 is a side elevation partly in section showing the machine of Fig. 1; Fig. 3 is a plan view partially broken away of the machine shown in Figs. 1 and 2; Fig. 4 is an end elevation of the machine shown in Fig. 1 looking from the left; Fig. 5 is an elevation of the underlying sprocket-wheel driving shaft arranged on the central plane of the machine but omitted from Fig. 1 through lack of space; Figs. 6 and 7 show in side view and end elevation respectively the construction of the inside links of the record carrying member or those links at the left in Figs. 1 and 3; Figs. 8 and 9 show similar views of the outside links or those at the right Figs. 1 and 3; Figs. 10 and 11 are details showing in side elevation the sound box clutch controller in its clutched and unclutched positions respectively; Fig. 12 is a sectional elevation showing the construction of the sound box carriage and the return screw; Fig. 13 is a vertical section showing the depending sliding shoe at the end of the plate; Fig. 14 is a plan view in section on the line 14—14 of Fig. 13; Fig. 15 is a similar but fragmentary view showing the depending shoe during its return movement; Fig. 16 is a sectional elevation showing the shoe in a position corresponding to that shown in Fig. 14; Fig. 17 is a section showing the shoe in elevation in a position corresponding to that shown in Fig. 15; and, Fig. 18 is a section on the line 18—18, in Fig. 2, showing the construction of the nut which engages the sound box return screw.

In the drawings for illustrative purposes I have shown the various features of my invention embodied in a multiple record phonograph having (Figs. 1 and 2) a series of record cylinders *a* journaled each upon the linked members of a pair of record-carrying chains passing over the separated sprocket wheels *b* and *b'* the latter fixed to rotate with the sprocket driving shaft b^2 which is mounted in the frame C of the machine, said records being brought one by one into an operative position beneath the sound reproducing mechanism D as the shaft b^2 is given an intermittent turning movement.

Referring first to the mounting of the individual records, there is provided an improved simple construction of support of minimum weight, but permitting the contraction of the record, under changes in temperature without fracture or other injury to the same, as well as the expansion of the record without loosening its grasp upon the support.

Referring more particularly to Figs. 1 and 2, support for the cylinder *a* is afforded by a series of elastic members *a'* arranged lengthwise the mandrel and radially with reference to the axis thereof, these being sufficient in number to accurately center the cylinder, while presenting to the core thereof a series of gripping members which are freely yieldable inwardly on contraction of the record.

One form of elastic mandrel is that illustrated in Fig. 1, the elastic members *a'* being constructed of round elastic steel wires an-

chored or embedded in suitably positioned holes in the hub of the opposite but symmetrically arranged mandrel supports a^2, a^3, the latter being keyed to the record-turning shaft a^4. Before contacting with the core of the record cylinder a, they are caused to bow outwardly at a^5 into or through radially formed slits in the flanged portions of the supports a^2, a^3, which slits act to space and position the wires and to allow the ready yielding thereof under contraction of the record.

The record when slipped over the mandrel is self seating and will be firmly held thereon irrespective of its position and whether pushed on entirely or partially. This construction permits the record to be pushed to any predetermined position on the mandrel and there effectively retained, this being in contrast to prior forms of tapered mandrels where the record must be pushed to a seat upon its tapered support regardless of where that leaves the record lengthwise the mandrel. This permits a record to be played in the same position upon its support as it was cut and, after withdrawal to be replaced upon the same, or on a different mandrel, always in the same longitudinal position. For the purposes hereinafter referred to, on the illustrated machine the record is preferably pushed to a fixed position determined by the out-turned lip a^6 on the inner flanged support a^2.

A mandrel constructed as described may be relied upon to center the record cylinder with an accuracy sufficient for ordinary purposes, but, if desired, the flanged supports may be made to fit the outer ends of the record core with a small clearance, such, for example, as five one thousandths of an inch, so that no greater eccentricity can occur than that allowed by such clearance, which I have found negligible, while this allows for the necessary contraction of the record under changes of temperature.

For the best results, the records are preferably reamed at their inner ends, where they loosely fit the periphery of the flanged supports, to render the outer faces concentric with the inner bearing faces, thereby avoiding eccentricity in the record itself which I have found a common fault with commercial records.

The record turning shaft at that end which I term the inner end passes through the mandrel support a^2 and an elongated journal sleeve a^7 terminating in the suitably notched head a^8, which latter at the proper time is clutched by the record driving mechanism hereinafter described.

The sleeve a^7 is hinged or pivoted at a^9 be-

that the mandrel and its record, when released at the opposite link, can be swung outwardly about the fulcrum, a^9 as is shown in dotted lines in Fig. 3.

The outer end of the turning shaft a^4 is journaled in the sliding collar a^{10}, fitting the open mouthed pocket e' (Figs. 1 and 8) in the link e of the outer chain, or that passing over the sprocket b'. The collar a^{10} has a beveled shoulder a^{11} which bears against the correspondingly shaped inner face of the pocket e', being forced against the same by the pressure of the spiral retaining spring a^{12} acting through the washer a^{13}. The bevel of the shoulder a^{11} upon the collar a^{10} is such that when the latter is seated in its pocket it is firmly held there by the spring a^{12} and the mandrel is securely held in accurate alinement upon the chain carrier. If the overlying end of the turning shaft a^4, which can be readily and manually seized, is lifted away from the link, the beveled collar will snap out of its seat and the mandrel can be swung outwardly clear of the link e for withdrawal of the record. The sleeve a^{14}, pinned to the shaft a^4 permits the collar a limited movement only, so that after effecting the desired change, when the shaft is again moved toward the link, the collar easily snaps into the pocket. Changes in the records will of course ordinarily be effected when the record is in an inoperative position, away from its position of engagement with the sound reproducing mechanism D.

The collar a^{10} and the washer are made in separate pieces, as shown, for the purpose of retarding the rotation of the record by the friction of the engaging surface of these two parts sufficiently to avoid a rotary movement of the record under its own inertia.

The successive links of each chain are constructed alike, each link being forked at one end to receive the end of the next adjacent link, to which it is pivotally secured by the pivotal tie rods f, which pass entirely through from one chain to the other. Each sprocket is provided with four projecting teeth b^{2x} (Fig. 2) which are suitably notched to receive the tie rods f, so that each link is supported by its sprocket at two points through engagement of the tie rods f therewith and through engagement with such tie rods only.

Referring again to Fig. 1, the record driving or turning mechanism is carried upon the sleeve g, suitably journaled in the frame C and given a constant rotary movement through the belt g' and the pulley g^2, the latter secured to the said sleeve to drive the same. The mandrel driving shaft g^3 which is clutched to the mandrel to drive the same,

shaft g^3 through the hollow coupling g^5 secured to the outer end of the said sleeve and provided with an internal key-way, with which engages a key g^6 upon the grooved collar g^4, permitting sliding movement of the latter while causing the rotation of the mandrel driving shaft g^3. The opposite end of the driving shaft g^3 is provided with a clutching head suitably notched to engage the correspondingly projecting head a^3 of the mandrel shaft a^4 when in the position shown in Fig. 1, but adapted to be withdrawn into a pocket formed in the end of the said sleeve g when the collar g^4 is drawn outwardly to unclutch the mandrel shaft a^4 and permit the sprocket wheels to turn for shifting the records.

I have found a marked improvement in the quality of the sound reproduction when the rotative movement of the record is perfectly uniform and this I have also found can be attained by increasing the mass of the parts to give a fly wheel effect thereto. To this end I preferably make use of the balance wheel g^8 of relatively great mass compared with that of the record and here shown secured to the driving sleeve g to rotate therewith and impart thereto a steadiness and uniformity of movement.

At each shifting of the records it is necessary that the record carrier should be positively and correctly alined with reference to the sound reproducing mechanism and I have therefore provided the machine with a locking and alining means comprising the locking pin h (Fig. 1), which is adapted to enter one of the four properly positioned holes h' (Fig. 2) in the sprocket when the latter is turned to bring a fresh record in its correct position and there lock the same until the pin h is again withdrawn. The pin h is carried (Fig. 3) by the horizontal swinging locking bar h^2 pivoted to the frame of the machine, the device h being pressed toward the face of the sprocket by the pressure of the leaf spring h^x acting against the bar h^2.

Pressing against the bar h^2 (Fig. 1) is the horizontal sliding rod h^3 contacting at its outer end with the side of the upright arm h^4 pivoted to the machine frame at h^5 and pressed constantly against the rod h^3 by the adjustable spiral tension spring h^6. The free upper end of the arm h^4 is forked and embraces the groove in the overhead collar g^4 on the driving shaft g^3, whereby an outward swinging movement of the arm will cause retraction of the sliding driving shaft and the disengagement of the head g^7 from the mandrel shaft.

After a record has been played suitable con- shaft and effecting at the same time the turning of the sprockets to shift the records. This operation may be effected in a great variety of ways, but as illustrative of one embodiment of my invention, I have shown the electromagnet I located beneath the sprocket shaft. On the completion of the playing of a record the electro-magnet is energized through means hereinafter described, causing the attraction of the armature i attached to the sliding rod i', the said armature being normally held away from the poles of the magnet by the compression spring i^2. This causes the opposite end of the sliding armature rod i' to contact with the upright lever h^7 pivoted on the machine frame at h^8 and to swing the free end of the upright lever against the horizontal locking bar h^2 causing the withdrawal of the latch h from the sprocket and causing at the same time the outward movement of the sliding rod h^3 against the vertical swinging lever h^4 simultaneously to unclutch the driving shaft g^3 and free the mandrel preparatory to the movement of the sprocket.

Referring now to Fig. 5 the lower end of the upright lever h^7 bears against a flange on the rotary sleeve j pinned to but slidable on the shaft j', which is journaled in the machine frame beneath the magnet I and is given a constant rotary movement by means of the worn gear j^2 and the worm j^3, the latter being driven by the pulley j^4 over which passes the belt g' carried to and driven by a spring motor (not shown) or any other suitable source of motive power. When the lever h^7 is swung about its fulcrum by energization of the magnet as described, its lower end forces the sleeve to the right as viewed in Fig. 5 against the opposing pressure of the spring j^5 causing the toothed clutch disk j^6 to engage a similar tooth disk j^7 on the loose sleeve j^8. The latter carries a sprocket wheel j^9 and acts, on engagement of the clutch disk, to rotate the overhead sprocket wheel j^{11} (Fig. 1) through the driving chain j^{10}. The sprocket wheel j^{11} is fast on a sleeve carrying also the pinion j^{12} the latter engaging the gear j^{13} loose on the main sprocket shaft b^2 but carrying the pawl j^{14} which bears against the teeth of the gear j^{15} to turn the latter and thereby the main sprocket shaft when the two clutch disks are engaged as described.

Although the magnet I is deënergized immediately after the beginning of the record-shifting movement the retracted latch pin h which continues to be pressed out by the face of the moving sprocket b, holds the driving shaft g^3 retracted and the

chored or embedded in suitably positioned holes in the hub of the opposite but symmetrically arranged mandrel supports a^2, a^3, the latter being keyed to the record-turning shaft a^4. Before contacting with the core of the record cylinder a, they are caused to bow outwardly at a^5 into or through radially formed slits in the flanged portions of the supports a^2, a^3, which slits act to space and position the wires and to allow the ready yielding thereof under contraction of the record.

The record when slipped over the mandrel is self seating and will be firmly held thereon irrespective of its position and whether pushed on entirely or partially. This construction permits the record to be pushed to any predetermined position on the mandrel and there effectively retained, this being in contrast to prior forms of tapered mandrels where the record must be pushed to a seat upon its tapered support regardless of where that leaves the record lengthwise the mandrel. This permits a record to be played in the same position upon its support as it was cut and, after withdrawal to be replaced upon the same, or on a different mandrel, always in the same longitudinal position. For the purposes hereinafter referred to, on the illustrated machine the record is preferably pushed to a fixed position determined by the out-turned lip a^6 on the inner flanged support a^2.

A mandrel constructed as described may be relied upon to center the record cylinder with an accuracy sufficient for ordinary purposes, but, if desired, the flanged supports may be made to fit the outer ends of the record core with a small clearance, such, for example, as five one thousandths of an inch, so that no greater eccentricity can occur than that allowed by such clearance, which I have found negligible, while this allows for the necessary contraction of the record under changes of temperature.

For the best results, the records are preferably reamed at their inner ends, where they loosely fit the periphery of the flanged supports, to render the outer faces concentric with the inner bearing faces, thereby avoiding eccentricity in the record itself which I have found a common fault with commercial records.

The record turning shaft at that end which I term the inner end passes through the mandrel support a^2 and an elongated journal sleeve a^7 terminating in the suitably notched head a^8, which latter at the proper time is clutched by the record driving mechanism hereinafter described.

The sleeve a^7 is hinged or pivoted at a^9 between the arms of the upturned fork d' (Figs. 2 and 6) in the link d of the inner record-carrying chain or that passing over the sprocket b (see Figs. 1, 2, 6 and 7) so that the mandrel and its record, when released at the opposite link, can be swung outwardly about the fulcrum, a^9 as is shown in dotted lines in Fig. 3.

The outer end of the turning shaft a^4 is journaled in the sliding collar a^{10}, fitting the open mouthed pocket e' (Figs. 1 and 8) in the link e of the outer chain, or that passing over the sprocket b'. The collar a^{10} has a beveled shoulder a^{11} which bears against the correspondingly shaped inner face of the pocket e', being forced against the same by the pressure of the spiral retaining spring a^{12} acting through the washer a^{13}. The bevel of the shoulder a^{11} upon the collar a^{10} is such that when the latter is seated in its pocket it is firmly held there by the spring a^{12} and the mandrel is securely held in accurate alinement upon the chain carrier. If the overlying end of the turning shaft a^4, which can be readily and manually seized, is lifted away from the link, the beveled collar will snap out of its seat and the mandrel can be swung outwardly clear of the link e for withdrawal of the record. The sleeve a^{14}, pinned to the shaft a^4 permits the collar a limited movement only, so that after effecting the desired change, when the shaft is again moved toward the link, the collar easily snaps into the pocket. Changes in the records will of course ordinarily be effected when the record is in an inoperative position, away from its position of engagement with the sound reproducing mechanism D.

The collar a^{10} and the washer are made in separate pieces, as shown, for the purpose of retarding the rotation of the record by the friction of the engaging surface of these two parts sufficiently to avoid a rotary movement of the record under its own inertia.

The successive links of each chain are constructed alike, each link being forked at one end to receive the end of the next adjacent link, to which it is pivotally secured by the pivotal tie rods f, which pass entirely through from one chain to the other. Each sprocket is provided with four projecting teeth b^{2x} (Fig. 2) which are suitably notched to receive the tie rods f, so that each link is supported by its sprocket at two points through engagement of the tie rods f therewith and through engagement with such tie rods only.

Referring again to Fig. 1, the record driving or turning mechanism is carried upon the sleeve g, suitably journaled in the frame C and given a constant rotary movement through the belt g' and the pulley g^2, the latter secured to the said sleeve to drive the same. The mandrel driving shaft g^3 which is clutched to the mandrel to drive the same, is slidably mounted within the sleeve g and is pinned at its outer end to a grooved collar g^4. Movement is communicated from the driving sleeve g to the mandrel driving

g^5 through the hollow coupling g^6 secured to the outer end of the said sleeve and provided with an internal key-way, with which engages a key g^6 upon the grooved collar g^4, permitting sliding movement of the latter while causing the rotation of the mandrel driving shaft g^3. The opposite end of the driving shaft g^3 is provided with a clutching head suitably notched to engage the correspondingly projecting head a^5 of the mandrel shaft a^4 when in the position shown in Fig. 1, but adapted to be withdrawn into a pocket formed in the end of the said sleeve g when the collar g^4 is drawn outwardly to unclutch the mandrel shaft a^4 and permit the sprocket wheels to turn for shifting the records.

I have found a marked improvement in the quality of the sound reproduction when the rotative movement of the record is perfectly uniform and this I have also found can be attained by increasing the mass of the parts to give a fly wheel effect thereto. To this end I preferably make use of the balance wheel g^8 of relatively great mass compared with that of the record and here shown secured to the driving sleeve g to rotate therewith and impart thereto a steadiness and uniformity of movement.

At each shifting of the records it is necessary that the record carrier should be positively and correctly alined with reference to the sound reproducing mechanism and I have therefore provided the machine with a locking and alining means comprising the locking pin h (Fig. 1), which is adapted to enter one of the four properly positioned holes h' (Fig. 2) in the sprocket when the latter is turned to bring a fresh record in its correct position and there lock the same until the pin h is again withdrawn. The pin h is carried (Fig. 3) by the horizontal swinging locking bar h^2 pivoted to the frame of the machine, the device h being pressed toward the face of the sprocket by the pressure of the leaf spring h^x acting against the bar h^2.

Pressing against the bar h^2 (Fig. 1) is the horizontal sliding rod h^3 contacting at its outer end with the side of the upright arm h^4 pivoted to the machine frame at h^5 and pressed constantly against the rod h^3 by the adjustable spiral tension spring h^6. The free upper end of the arm h^4 is forked and embraces the groove in the overhead collar g^4 on the driving shaft g^3, whereby an outward swinging movement of the arm will cause retraction of the sliding driving shaft and the disengagement of the head g^7 from the mandrel shaft.

After a record has been played suitable controlling means are automatically actuated, causing simultaneous disengagement of the locking pin h, from the sprocket and the clutching head g^7 from the mandrel turning shaft and effecting at the same time the turning of the sprockets to shift the records. This operation may be effected in a great variety of ways, but as illustrative of one embodiment of my invention, I have shown the electromagnet I located beneath the sprocket shaft. On the completion of the playing of a record the electro-magnet is energized through means hereinafter described, causing the attraction of the armature i attached to the sliding rod i', the said armature being normally held away from the poles of the magnet by the compression spring i^2. This causes the opposite end of the sliding armature rod i' to contact with the upright lever h^7 pivoted on the machine frame at h^8 and to swing the free end of the upright lever against the horizontal locking bar h^2 causing the withdrawal of the latch h from the sprocket and causing at the same time the outward movement of the sliding rod h^3 against the vertical swinging lever h^4 simultaneously to unclutch the driving shaft g^3 and free the mandrel preparatory to the movement of the sprocket.

Referring now to Fig. 5 the lower end of the upright lever h^7 bears against a flange on the rotary sleeve j pinned to but slidable on the shaft j', which is journaled in the machine frame beneath the magnet I and is given a constant rotary movement by means of the worn gear j^2 and the worm j^3, the latter being driven by the pulley j^4 over which passes the belt g' carried to and driven by a spring motor (not shown) or any other suitable source of motive power. When the lever h^7 is swung about its fulcrum by energization of the magnet as described, its lower end forces the sleeve to the right as viewed in Fig. 5 against the opposing pressure of the spring j^5 causing the toothed clutch disk j^6 to engage a similar tooth disk j^7 on the loose sleeve j^8. The latter carries a sprocket wheel j^9 and acts, on engagement of the clutch disk, to rotate the overhead sprocket wheel j^{11} (Fig. 1) through the driving chain j^{10}. The sprocket wheel j^{11} is fast on a sleeve carrying also the pinion j^{12} the latter engaging the gear j^{13} loose on the main sprocket shaft b^2 but carrying the pawl j^{14} which bears against the teeth of the gear j^{15} to turn the latter and thereby the main sprocket shaft when the two clutch disks are engaged as described.

Although the magnet I is deënergized immediately after the beginning of the record-shifting movement the retracted latch pin h which continues to be pressed out by the face of the moving sprocket b, holds the driving shaft g^7 retracted and the clutch disks j^6 and j^7 engaged until the next record is brought into a position of alinement, when the pin finds and enters the next alining hole h' locking the sprocket in its cor-

rect position and at the same time releasing the lever h^7 to permit the unclutching of the disks j^6 and j^7 which follows under the action of the spring j^5, and also releasing the swinging arm h^4.

During the shifting of the records the stylus which has been automatically lifted from the face of the record, is traversed back to its initial position and again dropped into engagement with the record at the beginning of the record groove.

The sound box D may be of any suitable construction being provided with the usual diaphragm and attached stylus K, the latter positioned for engagement with the record groove. The sound box D is supported at the end of the horizontal arm k, which is pivoted at k^2 to the sliding sound box carrier k^3, the latter (Figs. 2, 3 and 12) being slidable along the rod k^4 at the rear of the machine. The carrier k^3 is traversed in its advance or reproducing movement by means of the forwardly projecting horizontal arm k^5, attached to the carrier and provided near its forward end with the segmental nut k^6, which engages with the upper face of the finely threaded screw k^7. The feed screw k^7 is constantly rotated to advance the stylus when the nut k^6 is in engagement with said screw by means of the gear k^8 (Figs. 3 and 4) secured at the end thereof and outside the machine casing; the gear k^8 being driven through the idler k^9 and the driving feed pinion k^{10}; the latter (Fig. 1) being mounted directly on the driving sleeve g.

The sound box is given an adjustable spring support upon the arm k^5 through the intervention of the spiral spring k^{11}. The latter rests upon the arm k^5 about the threaded stud k^{12} and is carried in the hollow cap k^{13} which is adjustably threaded into the arm k, whereby turning of the cap will adjust the sound box relatively to the arm k^5. A forked guiding piece is secured to the arm k^5 and with its upturned ears embraces the arm k to prevent lateral displacement thereof.

When the sound box reaches the end of the record it is automatically lifted, as will be described, and this causes withdrawal of the nut k^6 from the feed screw k^7, the stoppage of the advance feed and at the same time the engagement of the depending segmental nut k^{15} with the coarse threaded return feed screw k^{16} at the rear of the machine and beneath the carrier shaft k^4. The nut k^{15} (Figs. 2, 12 and 18) is secured to the overhead collar k^{17}, fast to the sleeve or bushing k^{18}, slidable along the shaft k^4 and loosely fitted within the carrier k^3.

The normal position of the nut relatively to the carrier k^3, which is shown in Fig. 2, is of the collar, the bevel of the pin point, however, being such that the carrier may be turned relatively to the collar and the pin snapped away from its seat, thus permitting the sound box with its arm and feeding nut k^6 to be swung upward and backward out of the way for inspection of the machine or for any other purpose, while still leaving the nut k^{15} depending in the position shown in Fig. 2. When the sound box is swung forward again into position, a positioning arm k^{20} also depending from the collar k^{17} holds the latter in substantially its normal position until the pin k^{17} snaps into its seat in the collar.

The spring-pressed pin k^{19} also assists in enforcing engagement of the nut k^{15} with the return feed screw k^{16}, for, if the threads of the screw are not in such a position as to permit the nut to drop into the same when the stylus is lifted from the record, the pin k^{19} is forced against its spring and the pressure thereof tends to force the nut into engagement as soon as the screw turns far enough to permit this.

The coarse threaded return feed screw k^{16} is given a movement the reverse of the advance screw k^7 by means of engagement between the gear k^{21} (Figs. 3 and 4) fast upon the screw k^{16} and the gear k^8 upon the advance feed screw k^7.

An important feature of my invention is the provision of means whereby the stylus may be dropped into the first groove at the commencement of reproduction and whereby this is accomplished with each of the records of the series irrespective of differences in the cutting of the records, also in the provision of means for raising the stylus from the record immediately after the last note is played and with each record of the series. This not only insures the elimination of the hissing noise usually preceding and following the playing of a record, but also avoids the unnecessary lapse of time between the playing of the records.

The controlling device for dropping the stylus on its return movement at the appropriate time and place is carried by a swinging stirrup l (Figs. 1 and 13 to 17) extending across the machine and pivoted by its upturned ends to the frame thereof. To this stirrup is secured the guide plate l' of an L shaped section having the upturned lip l^2 and supporting the sliding controlling plate l^3, the latter having a straight vertical front edge l^4 for a greater portion of its length, but terminating at one end in the beveled recessed portion l^5.

Fixedly secured to the feeding arm k^5 is the depending controlling shoe l^6 so positioned that during the advance of the

When the stylus reaches the end of the record, however, and is lifted, the shoe l^5 is raised clear of the plate l^2, and the latter, carried by the swinging stirrup gravitates beneath the lower edge of the shoe so that when the stylus is released by the lifting mechanism the shoe is deposited and caused to return upon the upper face of the plate l^2 near its outer edge, the sound box being thereby sustained at such an elevation as to cause the stylus to clear the record and the nut k^6 to be disengaged from the advance feed screw k^7. At the instant when the shoe reaches the recessed portion l^6 upon the plate it drops into such recessed portion (see Figs. 14 and 16), lowering the stylus, disengaging the nut k^{16} from the return feed screw, and again starting the advance of the reproducing mechanism. The advanced edge of the shoe is beveled to correspond to the bevel l^7 upon the plate and as the shoe advances with the sound box it swings the plate with its stirrup back from the position shown in Fig. 14 to that shown in Fig. 15, so that it assumes the position shown in Fig. 17 during the reproduction of the record. The position of the sliding plate l^2 therefore determines the dropping of the stylus and this I have rendered automatically adjustable with respect to the commencement of the record groove in each individual record of the series so that wherever the groove starts relatively to the end of the record the stylus will there be dropped and at no other place. This is effected by the V-shaped controller positioning device m having a flared opening positioned approximately in the path of travel of the outturned end of the series of pins m', the latter being adjustably secured to the upright arm m^2 upon each of the record-carrying links d (Fig. 6). The pin m' may be secured in its link by any suitable means, as by the set screw m^3 and there accurately adjusted with reference to the commencement of the sound groove of that record which is carried by the next succeeding link. As the records are shifted, the positioning pin upon the link which is carrying its record out of operative position is caused to sweep through the flared opening of the positioning device and center the said device in its line of travel, thereby positioning the controlling plate l^2 so as to drop the stylus exactly in the commencement of the groove of the next record.

By previously adjusting the positioning pin m' corresponding to each record with reference to the first groove therein, the stylus will be dropped into the first groove of each record when the latter is presented to the sound reproducing mechanism, irrespective of variations in the cutting of the different records.

In the illustrated machine there is provided not only the described means for dropping the stylus into the first groove of the record, but also for dropping the stylus into the beginning of that groove. For this purpose the records advancing toward the operative position are held against rotation by mandrel-locking means and presented to the stylus with the beginning of the record groove directly beneath the line of travel of the stylus, the lock being then withdrawn to permit rotation of the record, which follows as soon as the stylus is lowered.

The mandrel locking means comprises a locking pin n (Figs. 3 and 7) carried by the link d and adapted to enter a locking recess n' in the inner face of the flanged mandrel support a^2. The pin n is slidably mounted in the upright member n^2 of the link b, being pressed toward the mandrel by the leaf spring n^3. The locking pin n is withdrawn from the mandrel as the record reaches its uppermost and operative position, by the forked end of the bell crank lever n^4 pivoted to the side of the link, the withdrawal of the link being effected by contact between the opposite spherical end n^5 of the lever arm and the under face of the stationary cam n^6 (Figs. 1, 4, 10 and 11) secured to the inner side of the machine frame. As the record moves into operative position, the spherical head rides upon the cam, causing the latter to withdraw the locking pin and free the mandrel for rotation, the latter, however, being still positioned against accidental movement by the friction between the collar a^{11} and the washer a^{12}.

The mandrel is provided with a reference or index mark, such as the zero mark, n^7 (Fig. 2), and each record after being cut, is provided with a corresponding reference mark n^8, alining with the beginning of the record groove. The mandrel index mark is so located with reference to the locking recess n' that when the record is pushed upon the support with its reference mark registering with the reference mark upon the mandrel, the locked mandrel will bring the first part of the groove, directly beneath the line of travel of the stylus.

After a record is played the record may be restored to its zero position and there locked in any desired way, but in the described embodiment of my invention I have provided the friction band n^9 against which the records contact as they travel away from the operative or reproducing position. By this contact they are turned slightly at each record shift and in the course of its intermittent turning each record will finally be locked in its zero position by the locking pin n find-

rect position and at the same time releasing the lever h^7 to permit the unclutching of the disks j^6 and j^7 which follows under the action of the spring j^5, and also releasing the swinging arm h^4.

During the shifting of the records the stylus which has been automatically lifted from the face of the record, is traversed back to its initial position and again dropped into engagement with the record at the beginning of the record groove.

The sound box D may be of any suitable construction being provided with the usual diaphragm and attached stylus K, the latter positioned for engagement with the record groove. The sound box D is supported at the end of the horizontal arm k, which is pivoted at k^2 to the sliding sound box carrier k^3, the latter (Figs. 2, 3 and 12) being slidable along the rod k^4 at the rear of the machine. The carrier k^3 is traversed in its advance or reproducing movement by means of the forwardly projecting horizontal arm k^5, attached to the carrier and provided near its forward end with the segmental nut k^6, which engages with the upper face of the finely threaded screw k^7. The feed screw k^7 is constantly rotated to advance the stylus when the nut k^6 is in engagement with said screw by means of the gear k^8 (Figs. 3 and 4) secured at the end thereof and outside the machine casing; the gear k^8 being driven through the idler k^9 and the driving feed pinion k^{10}; the latter (Fig. 1) being mounted directly on the driving sleeve g.

The sound box is given an adjustable spring support upon the arm k^5 through the intervention of the spiral spring k^{11}. The latter rests upon the arm k^5 about the threaded stud k^{12} and is carried in the hollow cap k^{13} which is adjustably threaded into the arm k, whereby turning of the cap will adjust the sound box relatively to the arm k^5. A forked guiding piece is secured to the arm k^5 and with its upturned ears embraces the arm k to prevent lateral displacement thereof.

When the sound box reaches the end of the record it is automatically lifted, as will be described, and this causes withdrawal of the nut k^6 from the feed screw k^7, the stoppage of the advance feed and at the same time the engagement of the depending segmental nut k^{15} with the coarse threaded return feed screw k^{16} at the rear of the machine and beneath the carrier shaft k^4. The nut k^{15} (Figs. 2, 12 and 18) is secured to the overhead collar k^{17}, fast to the sleeve or bushing k^{18}, slidable along the shaft k^4 and loosely fitted within the carrier k^3.

The normal position of the nut relatively to the carrier k^3, which is shown in Fig. 2, is maintained by the spring pressed pin k^{19}, the pointed end of which fits a correspondingly shaped depression in the opposing face of the collar, the bevel of the pin point, however, being such that the carrier may be turned relatively to the collar and the pin snapped away from its seat, thus permitting the sound box with its arm and feeding nut k^6 to be swung upward and backward out of the way for inspection of the machine or for any other purpose, while still leaving the nut k^{15} depending in the position shown in Fig. 2. When the sound box is swung forward again into position, a positioning arm k^{20} also depending from the collar k^{17} holds the latter in substantially its normal position until the pin k^{17} snaps into its seat in the collar.

The spring-pressed pin k^{19} also assists in enforcing engagement of the nut k^{15} with the return feed screw k^{16}, for, if the threads of the screw are not in such a position as to permit the nut to drop into the same when the stylus is lifted from the record, the pin k^{19} is forced against its spring and the pressure thereof tends to force the nut into engagement as soon as the screw turns far enough to permit this.

The coarse threaded return feed screw k^{16} is given a movement the reverse of the advance screw k^7 by means of engagement between the gear k^{21} (Figs. 3 and 4) fast upon the screw k^{16} and the gear k^8 upon the advance feed screw k^7.

An important feature of my invention is the provision of means whereby the stylus may be dropped into the first groove at the commencement of reproduction and whereby this is accomplished with each of the records of the series irrespective of differences in the cutting of the records, also in the provision of means for raising the stylus from the record immediately after the last note is played and with each record of the series. This not only insures the elimination of the hissing noise usually preceding and following the playing of a record, but also avoids the unnecessary lapse of time between the playing of the records.

The controlling device for dropping the stylus on its return movement at the appropriate time and place is carried by a swinging stirrup l (Figs. 1 and 13 to 17) extending across the machine and pivoted by its upturned ends to the frame thereof. To this stirrup is secured the guide plate l' of an L shaped section having the upturned lip l^2 and supporting the sliding controlling plate l^3, the latter having a straight vertical front edge l^4 for a greater portion of its length, but terminating at one end in the beveled recessed portion l^5.

Fixedly secured to the feeding arm k^5 is the depending controlling shoe l^6 so positioned that during the advance of the stylus the straight edge of the controller plate l^3 lies against the side of the shoe near its lower edge, as shown in Fig. 17.

When the stylus reaches the end of the record, however, and is lifted, the shoe l^5 is raised clear of the plate l^3, and the latter, carried by the swinging stirrup gravitates beneath the lower edge of the shoe so that when the stylus is released by the lifting mechanism the shoe is deposited and caused to return upon the upper face of the plate l^3 near its outer edge, the sound box being thereby sustained at such an elevation as to cause the stylus to clear the record and the nut k^6 to be disengaged from the advance feed screw k^7. At the instant when the shoe reaches the recessed portion l^4 upon the plate it drops into such recessed portion (see Figs. 14 and 16), lowering the stylus, disengaging the nut k^{16} from the return feed screw, and again starting the advance of the reproducing mechanism. The advanced edge of the shoe is beveled to correspond to the bevel l^6 upon the plate and as the shoe advances with the sound box it swings the plate with its stirrup back from the position shown in Fig. 14 to that shown in Fig. 15, so that it assumes the position shown in Fig. 17 during the reproduction of the record. The position of the sliding plate l^3 therefore determines the dropping of the stylus and this I have rendered automatically adjustable with respect to the commencement of the record groove in each individual record of the series so that wherever the groove starts relatively to the end of the record the stylus will there be dropped and at no other place. This is effected by the V-shaped controller positioning device m having a flared opening positioned approximately in the path of travel of the outturned end of the series of pins m', the latter being adjustably secured to the upright arm m^2 upon each of the record-carrying links d (Fig. 6). The pin m' may be secured in its link by any suitable means, as by the set screw m^3 and there accurately adjusted with reference to the commencement of the sound groove of that record which is carried by the next succeeding link. As the records are shifted, the positioning pin upon the link which is carrying its record out of operative position is caused to sweep through the flared opening of the positioning device and center the said device in its line of travel, thereby positioning the controlling plate l^3 so as to drop the stylus exactly in the commencement of the groove of the next record.

By previously adjusting the positioning pin m' corresponding to each record with reference to the first groove therein, the stylus will be dropped into the first groove of each record when the latter is presented to the sound reproducing mechanism, irrespective of variations in the cutting of the different records and, no matter how often the records are reproduced or are withdrawn from and replaced upon their mandrels.

In the illustrated machine there is provided not only the described means for dropping the stylus into the first groove of the record, but also for dropping the stylus into the beginning of that groove. For this purpose the records advancing toward the operative position are held against rotation by mandrel-locking means and presented to the stylus with the beginning of the record groove directly beneath the line of travel of the stylus, the lock being then withdrawn to permit rotation of the record, which follows as soon as the stylus is lowered.

The mandrel locking means comprises a locking pin n (Figs. 3 and 7) carried by the link d and adapted to enter a locking recess n' in the inner face of the flanged mandrel support a^2. The pin n is slidably mounted in the upright member n^2 of the link b, being pressed toward the mandrel by the leaf spring n^3. The locking pin n is withdrawn from the mandrel as the record reaches its uppermost and operative position, by the forked end of the bell crank lever n^4 pivoted to the side of the link, the withdrawal of the link being effected by contact between the opposite spherical end n^5 of the lever arm and the under face of the stationary cam n^6 (Figs. 1, 4, 10 and 11) secured to the inner side of the machine frame. As the record moves into operative position, the spherical head rides upon the cam, causing the latter to withdraw the locking pin and free the mandrel for rotation, the latter, however, being still positioned against accidental movement by the friction between the collar a^{11} and the washer a^{13}.

The mandrel is provided with a reference or index mark, such as the zero mark, n^7 (Fig. 2), and each record after being cut, is provided with a corresponding reference mark n^8, alining with the beginning of the record groove. The mandrel index mark is so located with reference to the locking recess n' that when the record is pushed upon the support with its reference mark registering with the reference mark upon the mandrel, the locked mandrel will bring the first part of the groove, directly beneath the line of travel of the stylus.

After a record is played the record may be restored to its zero position and there locked in any desired way, but in the described embodiment of my invention I have provided the friction band n^9 against which the records contact as they travel away from the operative or reproducing position. By this contact they are turned slightly at each record shift and in the course of its intermittent turning each record will finally be locked in its zero position by the locking pin n finding its locking hole in the mandrel flange.

The timing of the movements is preferably such that the record shifting is completed before the stylus returns to the drop-

ping point however far from the initial position of the record its groove begins. In order to prevent the record from being turned during the interim, I have provided the slidable locking plate o (Figs. 1, 10 and 11), which prevents the clutching movement of the driving shaft g^3, even though the latter be released by movement of the locking bar h^2, until the stylus is dropped for engagement with the record. The plate o is slotted to slide with a limited movement upon the pins o', and has an opening o^2, which in the lowermost portion of the plate registers with the clutch head g^7. The plate o is normally pressed upward, and toward the position shown in Fig. 11, by the spring o^3, located between the frame of the machine and the overturned end o^4 of the plate, but is pressed downward into the position shown in Fig. 10, by the overhanging lug o^5, upon the sound box D, when the latter is lowered as indicated in Fig. 1. When the clutch head g^7 is retracted to release the mandrel preparatory to the shifting movement, the plate moves upward, locking the clutching head in its pocket from which it cannot emerge until the plate is pushed downwardly by the weight of the sound box as the stylus is lowered. When the stylus drops into the record groove, the released clutching head engages the mandrel and the latter, on account of the relatively great inertia of the fly wheel g^3, immediately assumes the uniform speed of the latter.

To withdraw the stylus from the record, the sound box D is provided with the overhanging extension p, to the advanced face of which is secured the depending plate p' (Figs. 1 and 3), the lower edge of the latter being engaged and raised by a lifting pin p^2, one of which is carried by each of the outer carrying links e. As soon as the shifting movement of the sprocket begins, the lifting pin, which has a line of travel indicated by dotted lines in Fig. 2, meets the lower edge of the plate p' and raises the stylus, the controller plate l^2 thereupon swinging under the shoe l^6. After the sprocket is turned and the pin withdrawn from the plate p^2, the shoe l^6, resting upon the controller plate, supports the sound box during its return movement.

In order that the record shifting movement, and, therefore, the withdrawal of the stylus, may take place immediately on the completion of the last note of the record, the traveling sound box is provided (Figs. 2 and 3) with the depending stop finger r, which, just before the completion of the record, is caused to meet the end of the adjustable and yieldable stop pin r'. The latter (Figs. 8 and 9) is threaded into the lifting pin p^2 and [illegible] upon the upright

in Figs. 3 and 9, by the spring r^2, but, when engaged by the finger r, is moved with the sound box to cause contact between the lifting pin p^2 and the stationary contact pin r^4, attached to but insulated from the frame of the machine. The stationary contact is connected through circuits (unnecessary to show) with the magnet I and a suitable source of current, the other terminal of the circuit being grounded to the frame of the machine, so that, on contact between the contact r^4 and the pin p^2, which latter is of conducting material, the circuit is completed and the magnet energized for starting the shifting movement, as has been described. Upon withdrawal of the pin r', the latter again assumes the position shown in Fig. 3, thereby deënergizing the magnet.

The threaded adjustment of the pin r' within the locking pin p^2, permits the adjustment of the former with reference to the termination of the record groove in each individual record, so that the closure of the controlling circuit will take place at the proper instant in the travel of the stylus to withdraw the latter from the record when the last note has been played.

In the machine described the playing of the records follow one another rapidly in succession with no other interval than that required for the return of the stylus. The coarse threaded screw shown may be relied upon to return the stylus with sufficient rapidity for ordinary purposes but my invention is not necessarily limited to the specific form of stylus return mechanism shown and if a still quicker eturn is desired other means for effecting this may be employed.

It will of course be understood that many features of my invention herein described are applicable to types of sound reproducing or sound recording machines other than the one which is here taken for purposes of illustration, and that such features of my invention either modified or as described, may be applied to such machines without reference to the presence or absence of the remaining features of said invention. It will also be understood that while I have described with considerable detail for illustrative purposes one practical embodiment of my invention, the same is not limited to the details described, or the form, relation, or construction of parts, but that many and wide modifications may be made therein without departing from the spirit of my invention.

It is also to be understood that, while the illustrated machine employs a traveling stylus with a stationary record support, and adjustment of the engagement between the stylus and the record is attained by adjusting or regulating the movement of the stylus,

means by which the object is attained, are within the scope of my invention; it being obvious, for example, that the stylus might remain stationary and the record caused to travel.

Furthermore, although the machine illustrated is capable of and may be employed for regulation of the stylus movement to engage the record at the beginning of the groove thereof and withdraw therefrom at the end of the groove, my invention is not limited to the attainment of that precise condition; the engagement with the stylus may occur before the beginning of the groove and disengagement take place after the ending of the groove, it being within the scope of my invention to regulate the action of the stylus upon the record in any desired way with reference to the character of the groove impressed thereon.

I claim—

1. A multiple record sound-reproducing machine having means providing for a period of stylus engagement with the individual records proportioned in each case to the length of the sound groove therein.

2. A multiple record sound-reproducing machine having means providing for a period of stylus engagement with the individual records thereof automatically proportioned in each case to the length of the respective records.

3. A multiple record sound-reproducing machine employing a stylus and having a stylus controller, means for presenting to the stylus in succession the individual records of the machine, the control of the stylus by the said controller being dependent upon the location on the record of the beginning of the record groove or impression.

4. A multiple record sound-reproducing machine employing a stylus and having a stylus controller, means for presenting to the stylus in succession the individual records of the machine, the control of the stylus by the said controller being dependent upon the location on the record of the ending of the record groove or impression.

5. A multiple record sound-reproducing machine employing a stylus and having a stylus controller, means for presenting to the stylus in succession the individual records of the machine, the control of the stylus being dependent upon the differing character of the record groove or impression in the respective records.

6. A multiple record sound-reproducing machine having means for throwing the stylus in and out of engagement with the record, and means automatically adjustable with reference to each record for causing engagement thereof at the beginning of the record groove.

just the engagement of the stylus with the separate records with reference to the beginning of each record groove.

8. A multiple record sound-reproducing machine having a record-carrier, a stylus, and means upon said carrier for each of the several records thereof to determine the travel of the stylus for its respective record.

9. A multiple record sound-reproducing machine having a stylus and adjustable stylus-controlling means for each of the several records thereof.

10. In a multiple record sound reproducing machine the combination with a movable record carrier of means for causing the withdrawal of the stylus from the record on movement of said carrier and means adjustable for individual records for setting the carrier in motion.

11. In a reproducing machine having a movable record carrier for bringing successive records into position, means depending upon the character of each individual record for moving the carrier.

12. In a multiple record sound-reproducing machine, the combination with a movable record-carrier, and means for the several records adjustable each with reference to the ending of its respective record groove for setting said carrier in motion.

13. In a multiple record sound-reproducing machine, the combination with a movable record-carrier, of means for causing the withdrawal of the stylus from the record on movement of said carrier, and means for each record thereof adjusted with reference to the ending of its record groove for setting the said carrier in motion.

14. In a multiple record sound-reproducing or sound-recording machine, the combination with a stylus, a plurality of rotatable records, and means for presenting each record for successive engagement with the stylus in a predetermined position upon its support.

15. A multiple record sound reproducing machine having a plurality of rotatable records adapted for successive engagement with the sound reproducing mechanism, and means for holding the records against rotation prior to engagement with the sound reproducing mechanism.

16. A sound-reproducing or sound recording machine having a rotatable record, means for holding the record against rotation, and means for automatically releasing the same for rotation.

17. A multiple record sound-reproducing or sound-recording machine having a plurality of rotatable records, means for holding the records against rotation, and means for releasing the same prior to engagement

tion of the record its groove begins. In order to prevent the record from being turned during the interim, I have provided the slidable locking plate o (Figs. 1, 10 and 11), which prevents the clutching movement of the driving shaft g^3, even though the latter be released by movement of the locking bar h^3, until the stylus is dropped for engagement with the record. The plate o is slotted to slide with a limited movement upon the pins o', and has an opening o^2, which in the lowermost portion of the plate registers with the clutch head g^7. The plate o is normally pressed upward, and toward the position shown in Fig. 11, by the spring o^3, located between the frame of the machine and the overturned end o^4 of the plate, but is pressed downward into the position shown in Fig. 10, by the overhanging lug o^5, upon the sound box D, when the latter is lowered as indicated in Fig. 1. When the clutch head g^7 is retracted to release the mandrel preparatory to the shifting movement, the plate moves upward, locking the clutching head in its pocket from which it cannot emerge until the plate is pushed downwardly by the weight of the sound box as the stylus is lowered. When the stylus s... ...ops into the record groove, the released clutching head engages the mandrel and the latter, on account of the relatively great inertia of the fly wheel g^3, immediately assumes the uniform speed of the latter.

To withdraw the stylus from the record, the sound box D is provided with the overhanging extension p, to the advanced face of which is secured the depending plate p' (Figs. 1 and 3), the lower edge of the latter being engaged and raised by a lifting pin p^2, one of which is carried by each of the outer carrying links e. As soon as the shifting movement of the sprocket begins, the lifting pin, which has a line of travel indicated by dotted lines in Fig. 2, meets the lower edge of the plate p' and raises the stylus, the controller plate l^2 thereupon swinging under the shoe l^3. After the sprocket is turned and the pin withdrawn from the plate p^2, the shoe l^3, resting upon the controller plate, supports the sound box during its return movement.

In order that the record shifting movement, and, therefore, the withdrawal of the stylus, may take place immediately on the completion of the last note of the record, the traveling sound box is provided (Figs. 2 and 3) with the depending stop finger r, which, just before the completion of the record, is caused to meet the end of the adjustable and yieldable stop pin r'. The latter (Figs. 8 and 9) is threaded into the lifting pin p^2 and slidable in a head formed upon the upright arm r^2 at the rear end of the link e. The pin r' is normally pressed outward, as shown engaged by the finger r, is moved with the sound box to cause contact between the lifting pin p^2 and the stationary contact pin r^4, attached to but insulated from the frame of the machine. The stationary contact is connected through circuits (unnecessary to show) with the magnet I and a suitable source of current, the other terminal of the circuit being grounded to the frame of the machine, so that, on contact between the contact r^4 and the pin p^2, which latter is of conducting material, the circuit is completed and the magnet energized for starting the shifting movement, as has been described. Upon withdrawal of the pin r', the latter again assumes the position shown in Fig. 3, thereby deënergizing the magnet.

The threaded adjustment of the pin r' within the locking pin p^2, permits the adjustment of the former with reference to the termination of the record groove in each individual record, so that the closure of the controlling circuit will take place at the proper instant in the travel of the stylus to withdraw the latter from the record when the last note has been played.

In the machine described the playing of the records follow one another rapidly in succession with no other interval than that required for the return of the stylus. The coarse threaded screw shown may be relied upon to return the stylus with sufficient rapidity for ordinary purposes but my invention is not necessarily limited to the specific form of stylus return mechanism shown and if a still quicker eturn is desired other means for effecting this may be employed.

It will of course be understood that many features of my invention herein described are applicable to types of sound reproducing or sound recording machines other than the one which is here taken for purposes of illustration, and that such features of my invention either modified or as described, may be applied to such machines without reference to the presence or absence of the remaining features of said invention. It will also be understood that while I have described with considerable detail for illustrative purposes one practical embodiment of my invention, the same is not limited to the details described, or the form, relation, or construction of parts, but that many and wide modifications may be made therein without departing from the spirit of my invention.

It is also to be understood that, while the illustrated machine employs a traveling stylus with a stationary record support, and adjustment of the engagement between the stylus and the record is attained by adjusting or regulating the movement of the stylus, the reverse of these relations and conditions, as well as variations and modifications in the

within the scope of my invention; it being obvious, for example, that the stylus might remain stationary and the record caused to travel.

Furthermore, although the machine illustrated is capable of and may be employed for regulation of the stylus movement to engage the record at the beginning of the groove thereof and withdraw therefrom at the end of the groove, my invention is not limited to the attainment of that precise condition; the engagement with the stylus may occur before the beginning of the groove and disengagement take place after the ending of the groove, it being within the scope of my invention to regulate the action of the stylus upon the record in any desired way with reference to the character of the groove impressed thereon.

I claim—

1. A multiple record sound-reproducing machine having means providing for a period of stylus engagement with the individual records proportioned in each case to the length of the sound groove therein.

2. A multiple record sound-reproducing machine having means providing for a period of stylus engagement with the individual records thereof automatically proportioned in each case to the length of the respective records.

3. A multiple record sound-reproducing machine employing a stylus and having a stylus controller, means for presenting to the stylus in succession the individual records of the machine, the control of the stylus by the said controller being dependent upon the location on the record of the beginning of the record groove or impression.

4. A multiple record sound-reproducing machine employing a stylus and having a stylus controller, means for presenting to the stylus in succession the individual records of the machine, the control of the stylus by the said controller being dependent upon the location on the record of the ending of the record groove or impression.

5. A multiple record sound-reproducing machine employing a stylus and having a stylus controller, means for presenting to the stylus in succession the individual records of the machine, the control of the stylus being dependent upon the differing character of the record groove or impression in the respective records.

6. A multiple record sound-reproducing machine having means for throwing the stylus in and out of engagement with the record, and means automatically adjustable with reference to each record for causing engagement thereof at the beginning of the record groove.

7. A multiple record sound-reproducing machine having means automatically to adjust the engagement of the stylus with the separate records with reference to the beginning of each record groove.

8. A multiple record sound-reproducing machine having a record-carrier, a stylus, and means upon said carrier for each of the several records thereof to determine the travel of the stylus for its respective record.

9. A multiple record sound-reproducing machine having a stylus and adjustable stylus-controlling means for each of the several records thereof.

10. In a multiple record sound reproducing machine the combination with a movable record carrier of means for causing the withdrawal of the stylus from the record on movement of said carrier and means adjustable for individual records for setting the carrier in motion.

11. In a reproducing machine having a movable record carrier for bringing successive records into position, means depending upon the character of each individual record for moving the carrier.

12. In a multiple record sound-reproducing machine, the combination with a movable record-carrier, and means for the several records adjustable each with reference to the ending of its respective record groove for setting said carrier in motion.

13. In a multiple record sound-reproducing machine, the combination with a movable record-carrier, of means for causing the withdrawal of the stylus from the record on movement of said carrier, and means for each record thereof adjusted with reference to the ending of its record groove for setting the said carrier in motion.

14. In a multiple record sound-reproducing or sound-recording machine, the combination with a stylus, a plurality of rotatable records, and means for presenting each record for successive engagement with the stylus in a predetermined position upon its support.

15. A multiple record sound reproducing machine having a plurality of rotatable records adapted for successive engagement with the sound reproducing mechanism, and means for holding the records against rotation prior to engagement with the sound reproducing mechanism.

16. A sound-reproducing or sound recording machine having a rotatable record, means for holding the record against rotation, and means for automatically releasing the same for rotation.

17. A multiple record sound-reproducing or sound-recording machine having a plurality of rotatable records, means for holding the records against rotation, and means for releasing the same prior to engagement with the stylus.

18. A multiple record sound-reproducing machine having a plurality of rotatable rec-

ords, means for presenting each record for successive engagement with the stylus in a predetermined position upon its support, and means for restoring the record to its predetermined position before reëngagement with the stylus.

19. A multiple record sound-reproducing machine having a plurality of rotatable records, means for locking the several records against rotation prior to engagement with the stylus, means for releasing the same, and means for re-locking the said records before reëngagement with the stylus.

20. A multiple record sound reproducing machine having means for automatically varying the position of stylus engagement for successive records.

21. A multiple record sound reproducing machine having means for automatically varying the position of stylus disengagement for successive records.

22. A multiple record sound-reproducing machine having means for varying in consecutive records and with reference to the character of the successive sound records the position of stylus engagement or disengagement on the record, and means for presenting to the stylus in succession the individual records of the machine.

23. A multiple record sound-reproducing machine having record turning means, means for causing engagement between said turning means and successive records, and means for preventing engagement of said turning means with a freshly presented record prior to engagement of the stylus therewith.

24. A multiple record sound reproducing machine having record turning means, means for controlling disengagement of said turning means from the record with reference to the beginning of the record shifting movement, and means for controlling the engagement thereof with the record with reference to the point of engagement of the stylus therewith.

25. A multiple record sound reproducing machine having a plurality of records, record turning means adapted while in motion for engagement therewith and disengagement therefrom and a member of relatively great mass rotatable with said record driving means.

26. A multiple phonograph having a linked record carrier and stylus positioning means upon the individual links thereof.

27. A multiple phonograph having a linked record carrier and stylus withdrawing means upon the individual links thereof.

28. A multiple phonograph having a record carrier for shifting the records and means movable with the carrier for controlling the shifting movement of the records upon the links thereof.

30. A multiple phonograph having a linked carrier comprising pairs of oppositely arranged links, a hinged record support upon one link and an open-ended pocket in the opposite link.

31. A multiple record sound reproducing or recording machine, having a plurality of record supports, a fly wheel and means for attaching the fly wheel to and detaching it from the individual record supports.

32. A multiple record phonograph having a plurality of skeleton record supports, driving means, and a fly wheel connected with said driving means and adapted to be connected to and disconnected from the individual record supports.

33. A sound reproducing machine having a sound box, means for advancing the sound box and means for returning the same, and a yieldable connection between said advancing and return means.

34. A sound reproducing machine having a sound box, an advancing feed screw, a return feed screw, a member attached to said sound box engaging said advancing feed screw, another member also attached to said sound box for engaging said return feed screw, and a yieldable connection between said members.

35. A sound reproducing machine having a traveling sound box and a swinging support therefor attached to the machine and means attached to said sound box for engagement with said support, said support being adapted to swing beneath said engaging means when the sound box is lifted.

36. A sound reproducing machine having a sound box and a swinging gravity actuated support for said sound box adapted to act when the sound box is lifted.

37. A phonograph having a stylus, a controller comprising a sliding controlling plate and a swinging support therefor.

38. A multiple record sound-reproducing or sound-recording machine having means for throwing the stylus in and out of engagement with the record, means for presenting successive records in operative relation to the stylus, and differential means for causing engagement of said stylus with the successive records at the beginning of the record groove and disengagement therefrom at the end of the record groove.

39. A sound-reproducing machine having sound-reproducing mechanism, means for presenting to the said mechanism a succession of records, and differential means for disengaging the sound-reproducing mechanism in each case from the record at the end

presenting to said mechanism a succession of records, and differential means for engaging said mechanism in each case with the record at the beginning of the record groove.

41. A multiple record sound reproducing machine having a plurality of records, each provided with an identifying mark, a mandrel having also an identifying mark whereby the record may be placed thereon in a predetermined position, a stylus, and means for presenting said records in succession to said stylus, means for lowering the stylus upon the record, and means for simultaneously starting the rotation of the record.

42. A multiple record sound reproducing machine having a plurality of records having each an identifying mark placed for the determination of the beginning of the record groove, means for holding each record against rotation prior to the engagement of the stylus therewith, and means for presenting said records successively to the stylus.

43. A sound reproducing machine employing a grooved record, a traveling sound box provided with a stylus, means for lowering the sound box and stylus at a point determined with reference to the beginning of the record groove, and means for presenting the record for engagement with the stylus in a predetermined position upon its support.

44. A multiple record sound reproducing machine having sound reproducing mechanism, a plurality of records, means for presenting them successively to the action of the sound reproducing mechanism, means for holding each record against rotation prior to its presentation to the sound reproducing mechanism, and means for releasing the same prior to the engagement of the sound reproducing mechanism therewith.

45. A multiple record sound reproducing machine having a stylus, a plurality of records, means for presenting said records successively for engagement with said stylus, and means to cause disengagement of the stylus from the records at variable points in the path of stylus travel.

46. A multiple record sound reproducing machine having a stylus, a plurality of records, means for presenting said records in succession for engagement with said stylus, and means for causing engagement of the stylus with the successive records at variable points in the path of stylus travel.

47. A multiple record sound reproducing machine having sound reproducing mechanism, a plurality of records, and means for presenting said records in succession for engagement with said sound reproducing mechanism, said mechanism including a stylus having a variable length of travel.

48. A multiple record sound-reproducing machine, having a traveling sound box, means for advancing said sound box, means for holding said sound box in a position to disengage from said advancing means for its return movement, and means for changing the position of said holding means to vary the time of stylus engagement with the different records.

49. A multiple record sound-reproducing machine, having a traveling sound box, means for advancing the said sound box, a controller for holding the said sound box out of engagement with its advancing means during return movement, and means for adjusting said controller to vary the time of engagement with the advancing means for the different records.

50. A multiple record sound reproducing machine employing a stylus and having a stylus controller the application of the stylus to the record by the controller being dependent upon the location on the record of the beginning of the record groove or impression.

51. A multiple record sound reproducing machine having a plurality of records, a stylus, and means for varying in consecutive records and with reference to the character of successive sound records the time of application of the stylus to the record.

In testimony whereof, I have signed my name to this specification, in the presence of two subscribing witnesses.

GEORGE H. UNDERHILL.

Witnesses:

THOMAS B. BOOTH,

EVERETT S. EMERY.

cords, means for presenting each record for successive engagement with the stylus in a predetermined position upon its support, and means for restoring the record to its predetermined position before reëngagement with the stylus.

19. A multiple record sound-reproducing machine having a plurality of rotatable records, means for locking the several records against rotation prior to engagement with the stylus, means for releasing the same, and means for re-locking the said records before reëngagement with the stylus.

20. A multiple record sound reproducing machine having means for automatically varying the position of stylus engagement for successive records.

21. A multiple record sound reproducing machine having means for automatically varying the position of stylus disengagement for successive records.

22. A multiple record sound-reproducing machine having means for varying in consecutive records and with reference to the character of the successive sound records the position of stylus engagement or disengagement on the record, and means for presenting to the stylus in succession the individual records of the machine.

23. A multiple record sound-reproducing machine having record turning means, means for causing engagement between said turning means and successive records, and means for preventing engagement of said turning means with a freshly presented record prior to engagement of the stylus therewith.

24. A multiple record sound reproducing machine having record turning means, means for controlling disengagement of said turning means from the record with reference to the beginning of the record shifting movement, and means for controlling the engagement thereof with the record with reference to the point of engagement of the stylus therewith.

25. A multiple record sound reproducing machine having a plurality of records, record turning means adapted while in motion for engagement therewith and disengagement therefrom and a member of relatively great mass rotatable with said record driving means.

26. A multiple phonograph having a linked record carrier and stylus positioning means upon the individual links thereof.

27. A multiple phonograph having a linked record carrier and stylus withdrawing means upon the individual links thereof.

28. A multiple phonograph having a record carrier for shifting the records and means movable with the carrier for controlling the record shifting movement of the carrier.

29. A multiple phonograph having a linked record carrier and adjustable means for controlling the shifting movement of the records upon the links thereof.

30. A multiple phonograph having a linked carrier comprising pairs of oppositely arranged links, a hinged record support upon one link and an open-ended pocket in the opposite link.

31. A multiple record sound reproducing or recording machine, having a plurality of record supports, a fly wheel and means for attaching the fly wheel to and detaching it from the individual record supports.

32. A multiple record phonograph having a plurality of skeleton record supports, driving means, and a fly wheel connected with said driving means and adapted to be connected to and disconnected from the individual record supports.

33. A sound reproducing machine having a sound box, means for advancing the sound box and means for returning the same, and a yieldable connection between said advancing and return means.

34. A sound reproducing machine having a sound box, an advancing feed screw, a return feed screw, a member attached to said sound box engaging said advancing feed screw, another member also attached to said sound box for engaging said return feed screw, and a yieldable connection between said members.

35. A sound reproducing machine having a traveling sound box and a swinging support therefor attached to the machine and means attached to said sound box for engagement with said support, said support being adapted to swing beneath said engaging means when the sound box is lifted.

36. A sound reproducing machine having a sound box and a swinging gravity actuated support for said sound box adapted to act when the sound box is lifted.

37. A phonograph having a stylus, a controller comprising a sliding controlling plate and a swinging support therefor.

38. A multiple record sound-reproducing or sound-recording machine having means for throwing the stylus in and out of engagement with the record, means for presenting successive records in operative relation to the stylus, and differential means for causing engagement of said stylus with the successive records at the beginning of the record groove and disengagement therefrom at the end of the record groove.

39. A sound-reproducing machine having sound-reproducing mechanism, means for presenting to the said mechanism a succession of records, and differential means for disengaging the sound-reproducing mechanism in each case from the record at the end of the record groove.

40. A sound-reproducing machine having sound reproducing mechanism, means for

presenting to said mechanism a succession of records, and differential means for engaging said mechanism in each case with the record at the beginning of the record groove.

41. A multiple record sound reproducing machine having a plurality of records, each provided with an identifying mark, a mandrel having also an identifying mark whereby the record may be placed thereon in a predetermined position, a stylus, and means for presenting said records in succession to said stylus, means for lowering the stylus upon the record, and means for simultaneously starting the rotation of the record.

42. A multiple record sound reproducing machine having a plurality of records having each an identifying mark placed for the determination of the beginning of the record groove, means for holding each record against rotation prior to the engagement of the stylus therewith, and means for presenting said records successively to the stylus.

43. A sound reproducing machine employing a grooved record, a traveling sound box provided with a stylus, means for lowering the sound box and stylus at a point determined with reference to the beginning of the record groove, and means for presenting the record for engagement with the stylus in a predetermined position upon its support.

44. A multiple record sound reproducing machine having sound reproducing mechanism, a plurality of records, means for presenting them successively to the action of the sound reproducing mechanism, means for holding each record against rotation prior to its presentation to the sound reproducing mechanism, and means for releasing the same prior to the engagement of the sound reproducing mechanism therewith.

45. A multiple record sound reproducing machine having a stylus, a plurality of records, means for presenting said records successively for engagement with said stylus, and means to cause disengagement of the stylus from the records at variable points in the path of stylus travel.

46. A multiple record sound reproducing machine having a stylus, a plurality of records, means for presenting said records in succession for engagement with said stylus, and means for causing engagement of the stylus with the successive records at variable points in the path of stylus travel.

47. A multiple record sound reproducing machine having sound reproducing mechanism, a plurality of records, and means for presenting said records in succession for engagement with said sound reproducing mechanism, said mechanism including a stylus having a variable length of travel.

48. A multiple record sound-reproducing machine, having a traveling sound box, means for advancing said sound box, means for holding said sound box in a position to disengage from said advancing means for its return movement, and means for changing the position of said holding means to vary the time of stylus engagement with the different records.

49. A multiple record sound-reproducing machine, having a traveling sound box, means for advancing the said sound box, a controller for holding the said sound box out of engagement with its advancing means during return movement, and means for adjusting said controller to vary the time of engagement with the advancing means for the different records.

50. A multiple record sound reproducing machine employing a stylus and having a stylus controller the application of the stylus to the record by the controller being dependent upon the location on the record of the beginning of the record groove or impression.

51. A multiple record sound reproducing machine having a plurality of records, a stylus, and means for varying in consecutive records and with reference to the character of successive sound records the time of application of the stylus to the record.

In testimony whereof, I have signed my name to this specification, in the presence of two subscribing witnesses.

GEORGE H. UNDERHILL.

Witnesses:

THOMAS B. BOOTH,

EVERETT S. EMERY.

968

E. H. AMET.

COMBINATION APPARATUS FOR SYNCHRONIZING MOTION AND SOUND REPRODUCTIONS.

APPLICATION FILED SEPT. 5, 1911.

1,065,576.

Patented June 24, 1913.

3 SHEETS—SHEET 1.

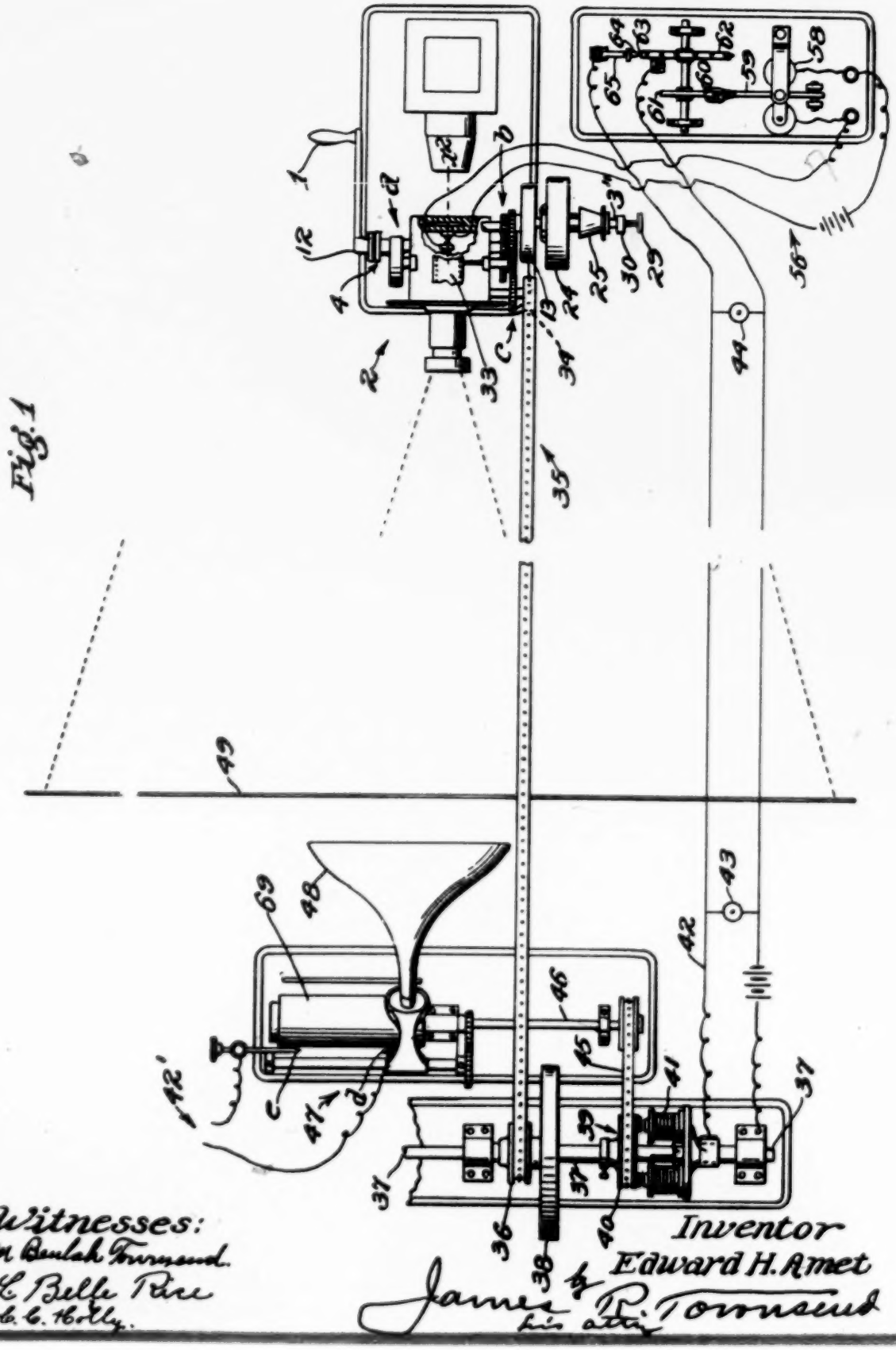

Witnesses:
M. Beulah Townsend.
L. Belle Price
E. E. Holly.

Inventor
Edward H. Amet
by James R. Townsend
his atty

970

E. H. AMET.

COMBINATION APPARATUS FOR SYNCHRONIZING MOTION AND SOUND REPRODUCTIONS.

APPLICATION FILED SEPT. 5, 1911.

1,065,576.

Patented June 24, 1913.

3 SHEETS—SHEET 2.

Fig. 3

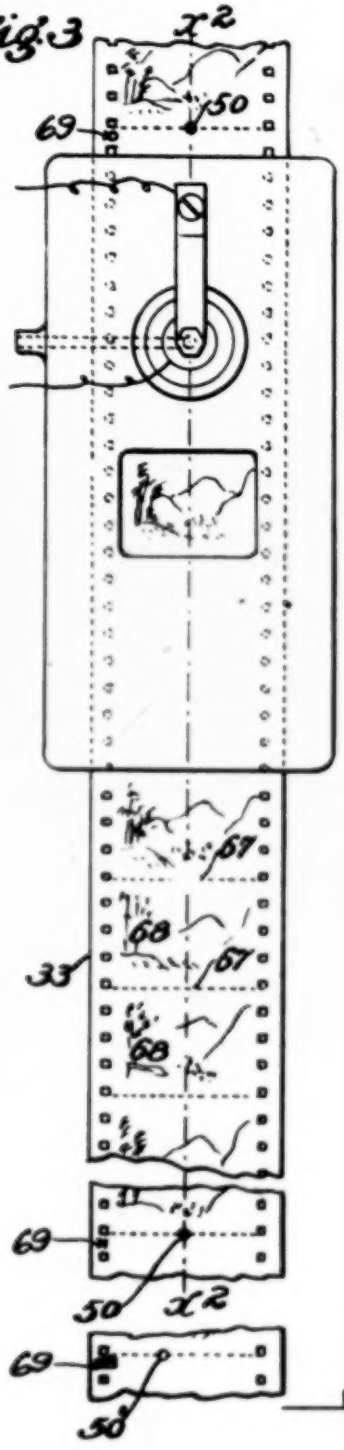

Fig. 2

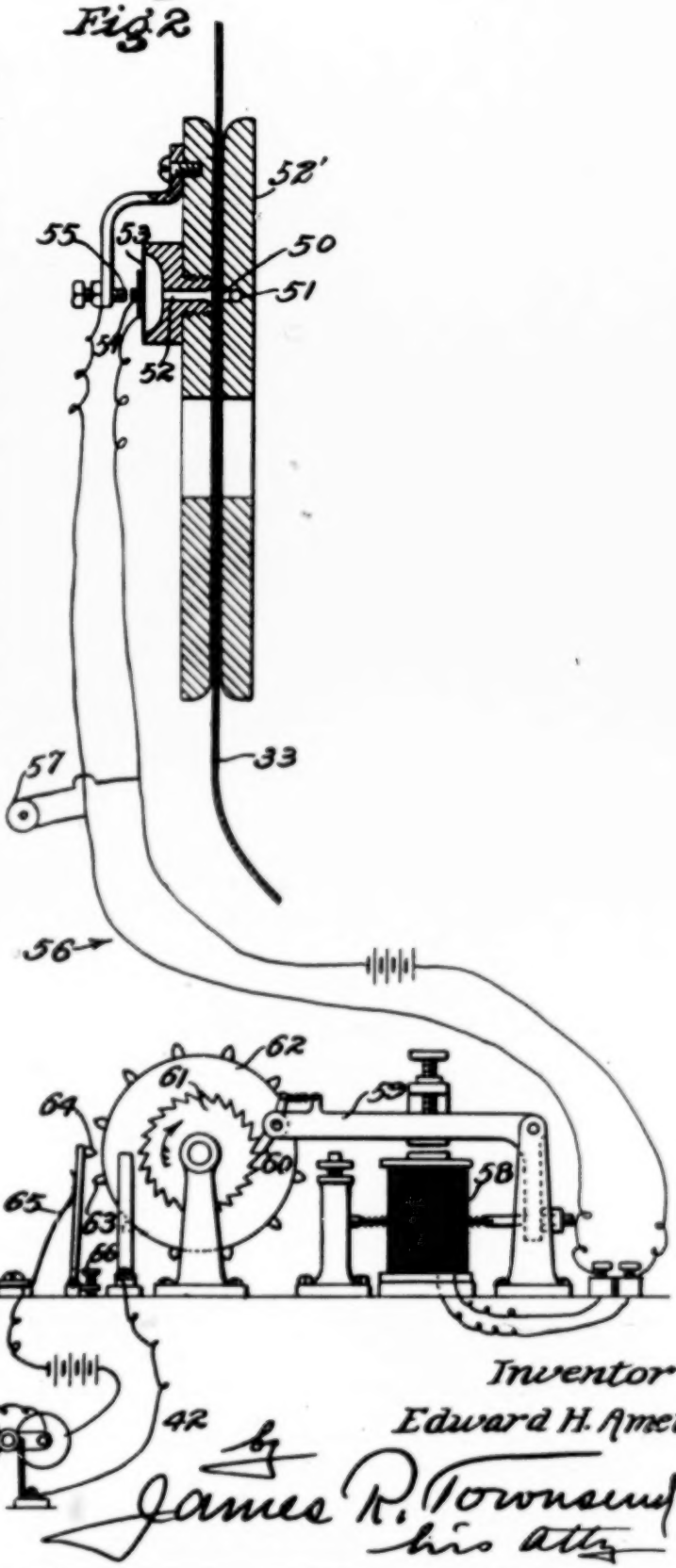

Witnesses
M. Beulah Townsend
L. Belle Rice
C. C. Holly

Inventor
Edward H. Amet
by
James R. Townsend
his atty

E. H. AMET.

COMBINATION APPARATUS FOR SYNCHRONIZING MOTION AND SOUND REPRODUCTIONS.

APPLICATION FILED SEPT. 5, 1911.

1,065,576.

Patented June 24, 1913.

3 SHEETS—SHEET 3.

Fig. 6

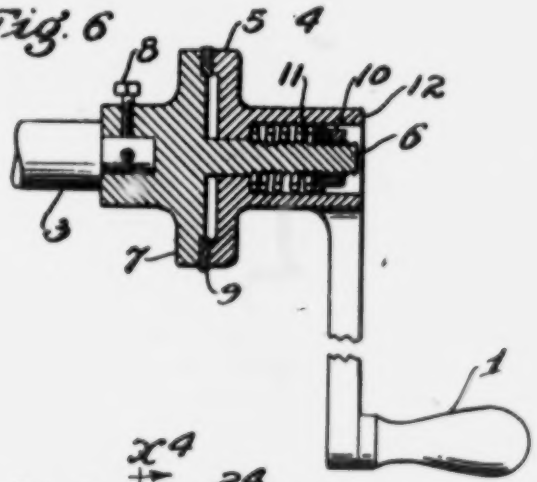

Fig. 5

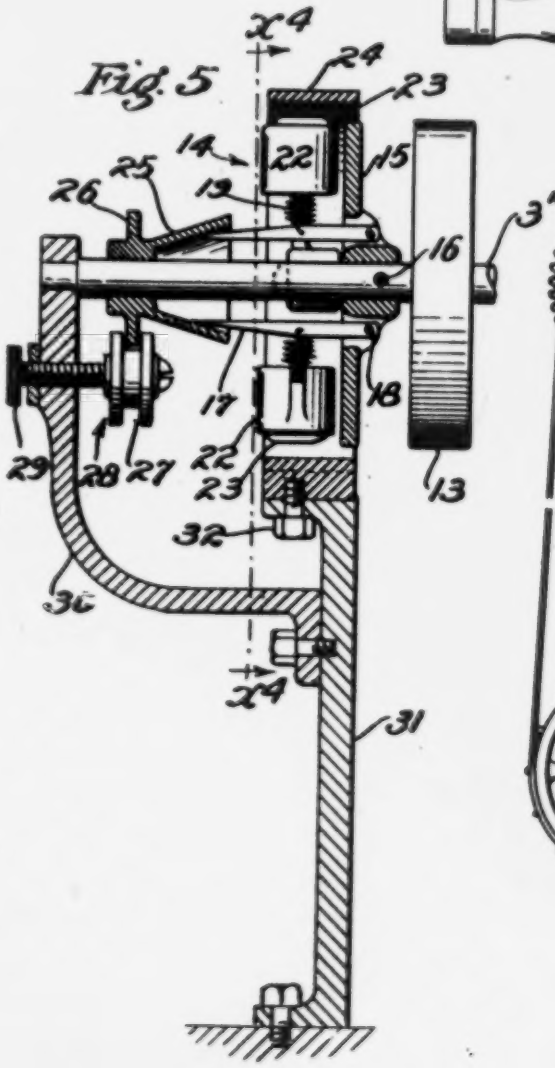

Fig. 4

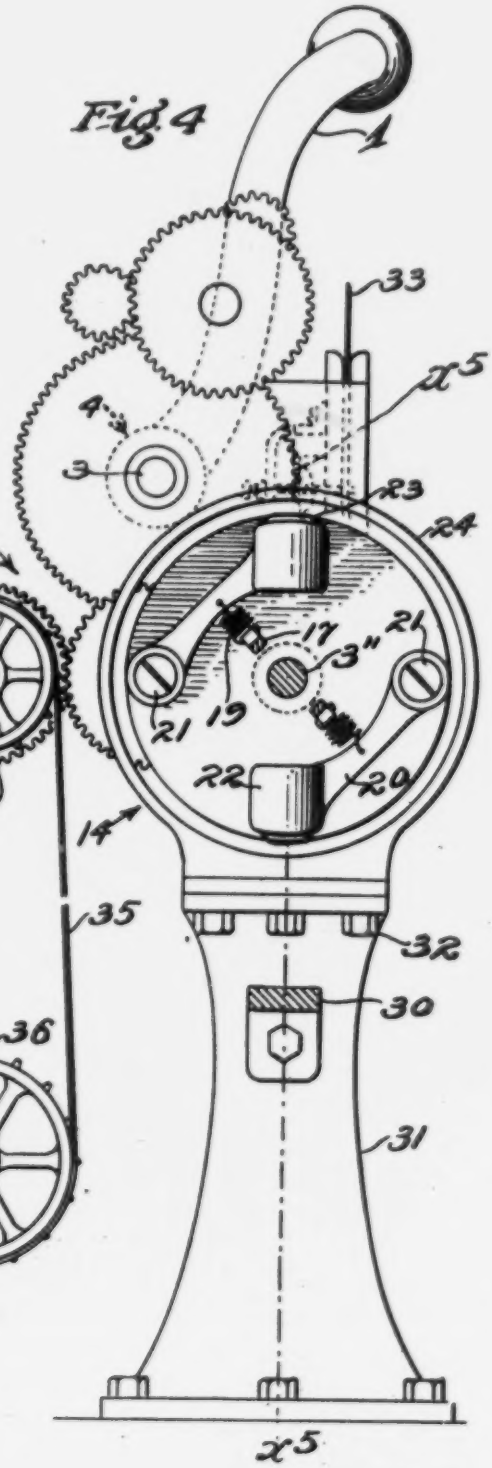

Witnesses.

M. Beulah Townsend

Inventor

Edward H. Amet

by

UNITED STATES PATENT OFFICE.

EDWARD H. AMET, OF REDONDO BEACH, CALIFORNIA.

COMBINATION APPARATUS FOR SYNCHRONIZING MOTION AND SOUND REPRODUCTIONS.

1,065,576. Specification of Letters Patent. Patented June 24, 1913.

Application filed September 5, 1911. Serial No. 647,769.

To all whom it may concern:

Be it known that I, EDWARD H. AMET, a citizen of the United States, residing at Redondo Beach, in the county of Los Angeles and State of California, have invented a new and useful Combination Apparatus for Synchronizing Motion and Sound Reproductions, of which the following is a specification.

An object of the invention is to provide means whereby motion pictures may be reproduced with such verbal portions and sound effects as would or should naturally emanate from or accompany the acts of the characters or objects photographed in the motion picture such as conversation, music, birds singing, bells ringing, whistling, etc.

An object is to maintain synchronism between motion and sound reproductions by simple mechanical means.

Another object is to provide in synchronism, the necessary records of the sound and motion acts; to reproduce the same in synchronism with minimum destructive or wearing action upon the picture film; and to provide for accurately starting the motion and sound reproducing devices together.

It is necessary in order to maintain the synchronism that provision be made whereby allowance for breakage of the film may be accurately made so that in case a portion of the film is broken or cut out the film can still be adjusted synchronously relative to the sound record.

The invention comprises the combination with a motion picture machine and a sound record machine of means for connecting the same so that when one of said machines is operated at its proper speed the other of said machines will be operated at its proper speed.

The invention also includes means for starting the sound record machine at the proper instant relative to the film subject of the picture machine.

The connecting means may be electrical or mechanical. For instance, the two machines may be connected to a constant speed electric motor having driving pulleys in proper proportion to give the required speeds to tion to drive the two machines at proper speeds; but I prefer mechanical means as the crank drive operated by hand is the adopted drive for motion picture machines.

It is not necessary to illustrate all the forms in which the invention may be carried out and I shall illustrate only the form I at present consider the most practical, and in which the machines are geared together and the sound record machine is made to depend upon the picture machine for its proper speed.

In this specification the term sound record machine includes both the sound recording and the sound reproducing apparatus, and the term motion picture machine, includes both the camera and the projection machine.

In carrying out this invention it is desirable that the sounds be reproduced near the points from which they appear to emanate and in some instances this may be accomplished by extending a connection from the motion picture machine to a station below; behind at one side of or elsewhere near to the screen upon which the picture is to be projected; and in other instances the sound reproducing machine may be at the same station with the motion picture projecting machine, and the transmission and reproduction of the sounds at the appropriate locations be effected by electrical means. In such electrical transmission the sound reproducing machine may be provided with a carbon telephone transmitter instead of the usual amplifying horn, and may be connected in a circuit having a telephone receiver at the appropriate station. It is not necessary in this application to illustrate such an arrangement as the same is exemplified in my companion application, Serial No. 636,740, filed July 3, 1911.

It is obvious that a combined motion and sound reproduction of any considerable length may require the use of a considerable number of sound record devices as phonograph record cylinders or Victor record disks and I shall therefore illustrate the apparatus as applied for operating an indefinite number of sound reproducing machines

1,065,576.

APPLICATION FILED SEPT. 5, 1911.

Patented June 24, 1913.

3 SHEETS—SHEET 3.

Fig. 6

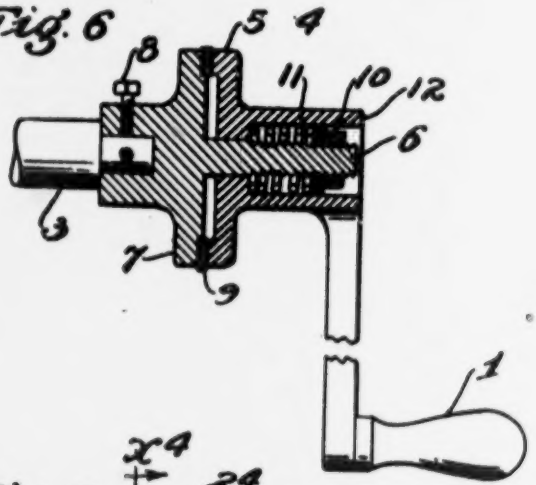

Fig. 5

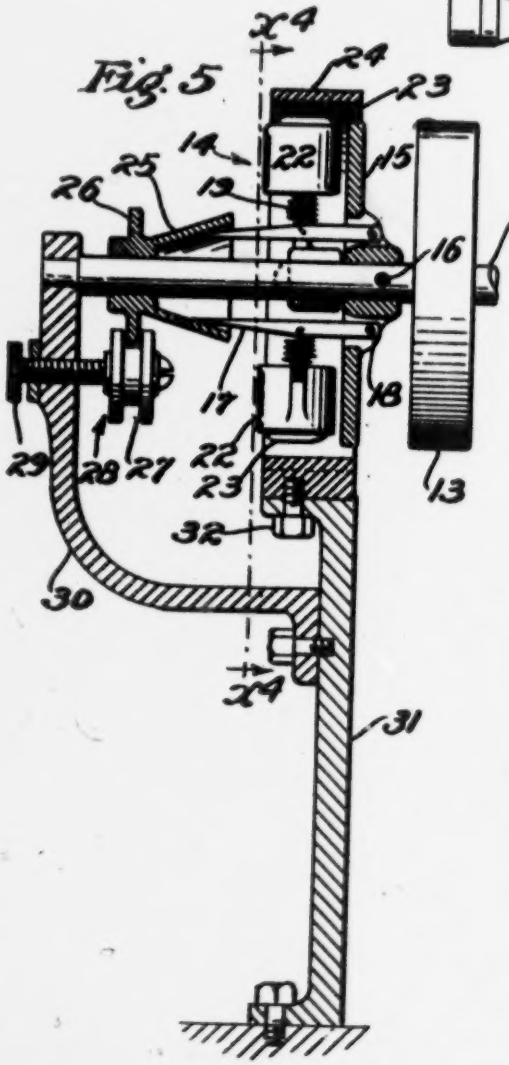

Fig. 4

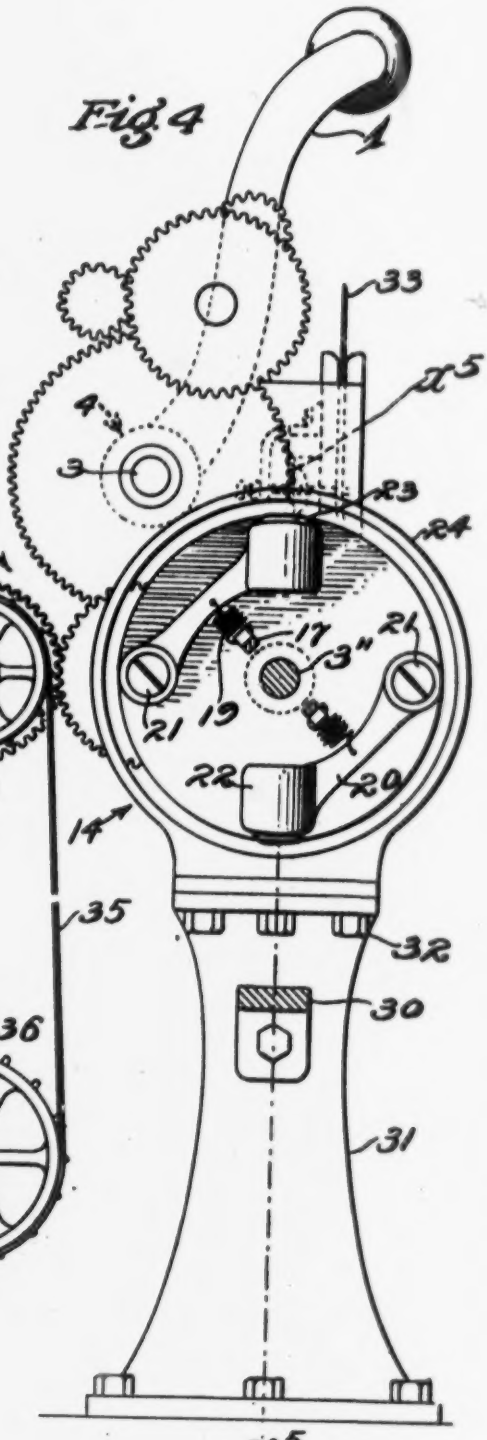

Witnesses.
M. Beulah Townsend
L. Belle Rice
L. B. Kelly

Inventor
Edward H. Amet
by James R. Townsend
his atty.

UNITED STATES PATENT OFFICE.

EDWARD H. AMET, OF REDONDO BEACH, CALIFORNIA.

COMBINATION APPARATUS FOR SYNCHRONIZING MOTION AND SOUND REPRODUCTIONS.

1,065,576. Specification of Letters Patent. Patented June 24, 1913.

Application filed September 5, 1911. Serial No. 647,769.

To all whom it may concern:

Be it known that I, EDWARD H. AMET, a citizen of the United States, residing at Redondo Beach, in the county of Los Angeles and State of California, have invented a new and useful Combination Apparatus for Synchronizing Motion and Sound Reproductions, of which the following is a specification.

An object of the invention is to provide means whereby motion pictures may be reproduced with such verbal portions and sound effects as would or should naturally emanate from or accompany the acts of the characters or objects photographed in the motion picture such as conversation, music, birds singing, bells ringing, whistling, etc.

An object is to maintain synchronism between motion and sound reproductions by simple mechanical means.

Another object is to provide in synchronism, the necessary records of the sound and motion acts; to reproduce the same in synchronism with minimum destructive or wearing action upon the picture film; and to provide for accurately starting the motion and sound reproducing devices together.

It is necessary in order to maintain the synchronism that provision be made whereby allowance for breakage of the film may be accurately made so that in case a portion of the film is broken or cut out the film can still be adjusted synchronously relative to the sound record.

The invention comprises the combination with a motion picture machine and a sound record machine of means for connecting the same so that when one of said machines is operated at its proper speed the other of said machines will be operated at its proper speed.

The invention also includes means for starting the sound record machine at the proper instant relative to the film subject of the picture machine.

The connecting means may be electrical or mechanical. For instance, the two machines may be connected to a constant speed electric motor having driving pulleys in proper proportion to give the required speeds to the two machines; or the machines may be widely separated where the required current is obtainable, and driven by induction motors having pulleys in the proper proportion to drive the two machines at proper speeds; but I prefer mechanical means as the crank drive operated by hand is the adopted drive for motion picture machines.

It is not necessary to illustrate all the forms in which the invention may be carried out and I shall illustrate only the form I at present consider the most practical, and in which the machines are geared together and the sound record machine is made to depend upon the picture machine for its proper speed.

In this specification the term sound record machine includes both the sound recording and the sound reproducing apparatus, and the term motion picture machine, includes both the camera and the projection machine.

In carrying out this invention it is desirable that the sounds be reproduced near the points from which they appear to emanate and in some instances this may be accomplished by extending a connection from the motion picture machine to a station below; behind at one side of or elsewhere near to the screen upon which the picture is to be projected; and in other instances the sound reproducing machine may be at the same station with the motion picture projecting machine, and the transmission and reproduction of the sounds at the appropriate locations be effected by electrical means. In such electrical transmission the sound reproducing machine may be provided with a carbon telephone transmitter instead of the usual amplifying horn, and may be connected in a circuit having a telephone receiver at the appropriate station. It is not necessary in this application to illustrate such an arrangement as the same is exemplified in my companion application, Serial No. 636,740, filed July 3, 1911.

It is obvious that a combined motion and sound reproduction of any considerable length may require the use of a considerable number of sound record devices as phonograph record cylinders or Victor record disks and I shall therefore illustrate the apparatus as applied for operating an indefinite number of sound reproducing machines that may be successively thrown into and out of operation all being driven from one synchronizing mechanism operated by connection with the motion picture machine.

The invention may be understood by reference to the accompanying drawings.

Figure 1 is a broken plan, partly diagrammatic, of apparatus constructed in accordance with and for the purpose of carrying out this invention as applied with the motion picture machine on one side and the sound machine on the other side of the picture screen. Fig. 2 is a fragmental elevation partly in section on line x^2, Figs. 1 and 3, to illustrate the electro-pneumatic means for starting and stopping a sound record. Fig. 3 is an elevation from the left of Fig. 2 showing a picture ribbon or film in place and broken to contract the view. Fig. 4 is an elevation of the means for controlling the speed of the motion picture projecting machine and also illustrating part of the gearing between said machine and the sound reproducing machine. Line x^4, Fig. 5, indicates the plane of sight, looking in the direction of the arrows. Fig. 5 is a sectional elevation from line x^5, Fig. 4, illustrating the centrifugal governing device. Fig. 6 is a sectional detail of the connection between the crank and the driving shaft of the motion picture machine.

The crank 1 of the motion picture machine 2, is connected with the driving shaft 3 through a regulatable slip frictional connection, which, as shown in Fig. 6 comprises a friction wheel 5 rotatably mounted on a stem 6 which extends axially from the friction hub 7, that is fixed by a set screw 8 on the driving shaft 3. Said friction wheel 5 is held in frictional engagement with the hub 7 through a shoe 9 of fiber or other suitable material by a regulating nut 10 screwed on the stem 6 against the pressure spring 11; said stem, nut and spring being contained in the hollow body 12 of the crank 1. By tightening or loosening the nut 10 the force exerted through crank 1 to turn the shaft 3 may be increased or decreased. When the resistance of the shaft 3 exceeds the regulated force the crank will slip relative to the shaft.

A fly wheel 13 is mounted on a shaft 3'' which is connected with the shaft 3 through the trains a, b, of gearing, and a centrifugal governor 14 is provided to exert a retarding effect on the shaft 3'', and consequently on shaft 3 when the required speed has been reached thus allowing the shafts 3 and 3'' to be turned to but not exceeding the regulated speed. By turning the crank 1, somewhat faster than the determined speed, the shafts 3 and 3'' will be made to run constantly at the regulated speed.

The governor 14 comprises a head 15 fixed by a pin 16 to the shaft 3'' and provided vided at the other end with weights 22 which overcome the springs 19 when the speed limit is approached and act through the brake shoes 23 on the brake rim 24, thereby producing friction which will cause sufficient slippage of the friction wheel 5 to prevent the speed limit from being exceeded. The fingers 17 are movable on their pivots 18 to throw the springs 19 toward the shaft 3 and are held in opposition to the springs 19 by the conical cup 25 which rotates with the shaft 3'' and fingers 17, and is provided with a flange 26, which extends into a groove 27 of a rotatable head 28 that turns on an adjusting screw 29 which is screwed through an arm 30 that forms a bearing for one end of the shaft 3'' and is carried by the frame 31 to which the brake rim 24 is fixed by the cap screws 32.

The motion picture film 33 is driven by the usual mechanism not shown, which is driven from the crank 1 and it is thus seen that by means of the governor 14 and slip joint 4 the picture machine and its ribbon 33 can not be raced.

A train of gears c connects a sprocket wheel 34 with the shaft 3'' and said sprocket wheel is connected by a sprocket connection 35, which may be a sprocket chain or a perforated belt, with a second sprocket wheel 36, that is fixed on a rotating element, as the shaft 37 which may be provided with a fly wheel 38. It is thus seen that when the motion picture machine is operated by its driving means, as the crank 1, the shaft 37 will be driven at a speed determined by the speed of the motion picture machine so long as the speed of the driving means 1, equals or exceeds the regulated speed. A collar 39 fixed to the shaft 37 holds an armature forming sprocket wheel 40 that is loosely mounted on the shaft 37 in close relation to the electro-magnet 41, which is fixed to said shaft. When the electro-magnet is energized the sprocket wheel 40 is caused to rotate with the shaft 37. The elements 40 and 41 constitute an electro-magnetic clutch. The circuit 42 of the magnet is controlled by the keys 43, 44, and an automatic control actuated from the film. The sprocket wheel 40 is connected by a suitable connection, as the perforated belt 45, with the shaft 46 of the sound record machine 47, which machine in the instance shown has a horn 48, suitably arranged relative to a screen 49 upon which the motion picture is to be projected. By the arrangement described the motion picture machine and the sound reproducing machine connected thereto may each be adjusted to the speed which will give the most perfect individual reproductions and still

talking machines may be thus connected with the motor shaft 37 and electro-magnet clutches and circuits therefor may be employed, and that all the circuits may be controlled from one station. One such talking machine is shown in plan and an electrical circuit 42′ closable by the contacts *d*, *e* to cut in another sound reproducing machine is shown. The connection between any talking machine and the shaft 37 will in each instance, comprise a clutch and connection like those shown, whereby the motion from the connection 35 may be applied to operate the shaft of a talking machine.

The film 33 may be provided at appropriate points with perforations 50 capable of affording communication, between a compressed air port 51 and an air duct 52 in the ribbon guide 52′ that supplies air to operate a diaphragm 53 which carries a movable contact 54 that connects with the stationary contact 55 when the air pressure is on the diaphragm; thus completing an electrical circuit 56 which may be cut-in by the push button switch 57 and which energizes an electro-magnet 58 to operate a spring returned armature 59 that carries a pawl 60 to engage a ratchet wheel 61, thereby to rotate a contact wheel 62 provided with contacts 63 for connection with the yielding contact point 64 that is held by a spring 65 in the path of the contact 63, being regulated by a screw 66 so that the distance it is allowed to project into said path may be increased or decreased. The spring 65 makes a connection with one side of the circuit 42 so that when the contacts 63, 64 complete the circuit 42, the electro-magnet 41 of the clutch 39 is energized so that the sprocket wheel 40 will be driven and consequently the sound reproducing machine will be operated. It is thus seen that when one perforation 50 passes the port 51 the circuit 42 will be closed, and when the next perforation 50 passes the port 51, the circuit 42 will be opened; thus causing the talking machine to alternately operate and cease operation. The number of teeth in the ratchet wheel 61 of the step by step circuit closer equals twice that of the number of contacts for the contact wheel, so that one operation of the armature 59 will move the contact wheel to make contact between the contact 63 and one of the contacts 64; and the next movement of the armature will break such contact.. The perforations 50 in the film or ribbon 33 are placed on the dividing lines 67 between the image carrying spaces 68, so that said perforations will pass between the light and the lens at the moment the shutter of the motion [illegible] machine is closed, so that sound accompaniments, the motion picture machine requires continuous operation covering the act and announcements between acts but the sound portions of the act are not necessarily continuous, and they are wholly absent during announcements between acts. It is therefore important that the sound record shall only run at the times when the act is or should be accompanied by sounds. Consequently, in order to economize the sound record or records, I have provided means operated by the motion picture record, ribbon or film to start and stop the sound recording or reproducing action of the sound record machine.

The speed at which the motion picture camera or projecting machine can be run either by hand or by power, is practically limited by nature and is commonly fixed by proper gearing at a predetermined number of exposures per minute, and the sound reproducing machine record also requires a certain number of revolutions per minute for practical reproduction; there being, for instance, about sixteen exposures per second for the picture machine and about 130 revolutions per minute for a phonograph record of present usual diameter. It is necessary therefore in the first place that the sound and picture records shall be produced with relation to each other so that each may have its appropriate speed, and that in the reproduction of the act said speeds shall be maintained. It is also necessary if the sound record is not to be continuously operated that its operation shall be absolutely controlled relative to that of the picture record. In other words, the feed of the motion picture film or record must bear a fixed and positive ratio to the feed of the sound record device, and the sound record device must start and stop operating its sound reproducing mechanism at times determined by the picture record. As an illustration, the two record devices may be likened to two link belts running side by side over the same gear during the periods when the sound should accompany the action of the motion picture character or subject. This relative movement between the two record devices must be initiated and terminated at exactly the right instants.

To prepare the records for reproducing an act, the following operations may be performed:

First. The sound record will be produced in proper time for the act. This may be done while the act is being rehearsed, or may be done independently of any rehearsal of the actors, whichever course may be necessary or advisable. The sound record will

The invention may be understood by reference to the accompanying drawings.

Figure 1 is a broken plan, partly diagrammatic, of apparatus constructed in accordance with and for the purpose of carrying out this invention as applied with the motion picture machine on one side and the sound machine on the other side of the picture screen. Fig. 2 is a fragmental elevation partly in section on line x^2, Figs. 1 and 3, to illustrate the electro-pneumatic means for starting and stopping a sound record. Fig. 3 is an elevation from the left of Fig. 2 showing a picture ribbon or film in place and broken to contract the view. Fig. 4 is an elevation of the means for controlling the speed of the motion picture projecting machine and also illustrating part of the gearing between said machine and the sound reproducing machine. Line x^4, Fig. 5, indicates the plane of sight, looking in the direction of the arrows. Fig. 5 is a sectional elevation from line x^5, Fig. 4, illustrating the centrifugal governing device. Fig. 6 is a sectional detail of the connection between the crank and the driving shaft of the motion picture machine.

The crank 1 of the motion picture machine 2, is connected with the driving shaft 3 through a regulatable slip frictional connection, which, as shown in Fig. 6 comprises a friction wheel 5 rotatably mounted on a stem 6 which extends axially from the friction hub 7, that is fixed by a set screw 8 on the driving shaft 3. Said friction wheel 5 is held in frictional engagement with the hub 7 through a shoe 9 of fiber or other suitable material by a regulating nut 10 screwed on the stem 6 against the pressure spring 11; said stem, nut and spring being contained in the hollow body 12 of the crank 1. By tightening or loosening the nut 10 the force exerted through crank 1 to turn the shaft 3 may be increased or decreased. When the resistance of the shaft 3 exceeds the regulated force the crank will slip relative to the shaft.

A fly wheel 13 is mounted on a shaft 3'' which is connected with the shaft 3 through the trains a, b, of gearing, and a centrifugal governor 14 is provided to exert a retarding effect on the shaft 3'', and consequently on shaft 3 when the required speed has been reached thus allowing the shafts 3 and 3'' to be turned to but not exceeding the regulated speed. By turning the crank 1, somewhat faster than the determined speed, the shafts 3 and 3'' will be made to run constantly at the regulated speed.

The governor 14 comprises a head 15 fixed by a pin 16 to the shaft 3'' and provided with fingers 17 that are pivoted at 18 to the head, and are connected by springs 19 with centrifugal arms 20 which are pivoted to the head by pivots 21 at one end and are provided at the other end with weights 22 which overcome the springs 19 when the speed limit is approached and act through the brake shoes 23 on the brake rim 24, thereby producing friction which will cause sufficient slippage of the friction wheel 5 to prevent the speed limit from being exceeded. The fingers 17 are movable on their pivots 18 to throw the springs 19 toward the shaft 3 and are held in opposition to the springs 19 by the conical cup 25 which rotates with the shaft 3'' and fingers 17, and is provided with a flange 26, which extends into a groove 27 of a rotatable head 28 that turns on an adjusting screw 29 which is screwed through an arm 30 that forms a bearing for one end of the shaft 3'' and is carried by the frame 31 to which the brake rim 24 is fixed by the cap screws 32.

The motion picture film 33 is driven by the usual mechanism not shown, which is driven from the crank 1 and it is thus seen that by means of the governor 14 and slip joint 4 the picture machine and its ribbon 33 can not be raced.

A train of gears c connects a sprocket wheel 34 with the shaft 3'' and said sprocket wheel is connected by a sprocket connection 35, which may be a sprocket chain or a perforated belt, with a second sprocket wheel 36, that is fixed on a rotating element, as the shaft 37 which may be provided with a fly wheel 38. It is thus seen that when the motion picture machine is operated by its driving means, as the crank 1, the shaft 37 will be driven at a speed determined by the speed of the motion picture machine so long as the speed of the driving means 1, equals or exceeds the regulated speed. A collar 39 fixed to the shaft 37 holds an armature forming sprocket wheel 40 that is loosely mounted on the shaft 37 in close relation to the electro-magnet 41, which is fixed to said shaft. When the electro-magnet is energized the sprocket wheel 40 is caused to rotate with the shaft 37. The elements 40 and 41 constitute an electro-magnetic clutch. The circuit 42 of the magnet is controlled by the keys 43, 44, and an automatic control actuated from the film. The sprocket wheel 40 is connected by a suitable connection, as the perforated belt 45, with the shaft 46 of the sound record machine 47, which machine in the instance shown has a horn 48, suitably arranged relative to a screen 49 upon which the motion picture is to be projected. By the arrangement described the motion picture machine and the sound reproducing machine connected thereto may each be adjusted to the speed which will give the most perfect individual reproductions and still bear to each other such ratio of speeds that, if they are started in register they will continue in register throughout the reproduction. It is understood that any number of

talking machines may be thus connected with the motor shaft 37 and electro-magnet clutches and circuits therefor may be employed, and that all the circuits may be controlled from one station. One such talking machine is shown in plan and an electrical circuit 42′ closable by the contacts *d*, *e* to cut in another sound reproducing machine is shown. The connection between any talking machine and the shaft 37 will in each instance, comprise a clutch and connection like those shown, whereby the motion from the connection 35 may be applied to operate the shaft of a talking machine.

The film 33 may be provided at appropriate points with perforations 50 capable of affording communication, between a compressed air port 51 and an air duct 52 in the ribbon guide 52′ that supplies air to operate a diaphragm 53 which carries a movable contact 54 that connects with the stationary contact 55 when the air pressure is on the diaphragm; thus completing an electrical circuit 56 which may be cut-in by the push button switch 57 and which energizes an electro-magnet 58 to operate a spring returned armature 59 that carries a pawl 60 to engage a ratchet wheel 61, thereby to rotate a contact wheel 62 provided with contacts 63 for connection with the yielding contact point 64 that is held by a spring 65 in the path of the contact 63, being regulated by a screw 66 so that the distance it is allowed to project into said path may be increased or decreased. The spring 65 makes a connection with one side of the circuit 42 so that when the contacts 63, 64 complete the circuit 42, the electro-magnet 41 of the clutch 39 is energized so that the sprocket wheel 40 will be driven and consequently the sound reproducing machine will be operated. It is thus seen that when one perforation 50 passes the port 51 the circuit 42 will be closed, and when the next perforation 50 passes the port 51, the circuit 42 will be opened; thus causing the talking machine to alternately operate and cease operation. The number of teeth in the ratchet wheel 61 of the step by step circuit closer equals twice that of the number of contacts for the contact wheel, so that one operation of the armature 59 will move the contact wheel to make contact between the contact 63 and one of the contacts 64; and the next movement of the armature will break such contact.. The perforations 50 in the film or ribbon 33 are placed on the dividing lines 67 between the image carrying spaces 68, so that said perforations will pass between the light and the lens at the moment the shutter of the motion picture projecting machine is closed, so that no undesirable flashing will occur on the screen.

In using this instrument for the reproduction of an act including visual actions and sound accompaniments, the motion picture machine requires continuous operation covering the act and announcements between acts but the sound portions of the act are not necessarily continuous, and they are wholly absent during announcements between acts. It is therefore important that the sound record shall only run at the times when the act is or should be accompanied by sounds. Consequently, in order to economize the sound record or records, I have provided means operated by the motion picture record, ribbon or film to start and stop the sound recording or reproducing action of the sound record machine.

The speed at which the motion picture camera or projecting machine can be run either by hand or by power, is practically limited by nature and is commonly fixed by proper gearing at a predetermined number of exposures per minute, and the sound reproducing machine record also requires a certain number of revolutions per minute for practical reproduction; there being, for instance, about sixteen exposures per second for the picture machine and about 130 revolutions per minute for a phonograph record of present usual diameter. It is necessary therefore in the first place that the sound and picture records shall be produced with relation to each other so that each may have its appropriate speed, and that in the reproduction of the act said speeds shall be maintained. It is also necessary if the sound record is not to be continuously operated that its operation shall be absolutely controlled relative to that of the picture record. In other words, the feed of the motion picture film or record must bear a fixed and positive ratio to the feed of the sound record device, and the sound record device must start and stop operating its sound reproducing mechanism at times determined by the picture record. As an illustration, the two record devices may be likened to two link belts running side by side over the same gear during the periods when the sound should accompany the action of the motion picture character or subject. This relative movement between the two record devices must be initiated and terminated at exactly the right instants.

To prepare the records for reproducing an act, the following operations may be performed:

First. The sound record will be produced in proper time for the act. This may be done while the act is being rehearsed, or may be done independently of any rehearsal of the actors, whichever course may be necessary or advisable. The sound record will also be given a starting signal as three whistles or the words "one, two, three."

Second. The sound record device thus prepared will be put in the sound repro-

ducing machine of an apparatus of this kind provided with a camera. The act will then be staged for performance and the motion picture machine, viz., the camera, will be started.

Third. When all is ready for the sound producing action, the operator will press the push button switch 43 thus energizing the electro-magnet and causing the record driving shaft 46 to rotate, thus operating the sound record device 69 until the starting signal is sounded, thereby; and thereupon the act will be performed; the actors being guided in time by the reproduced sounds; fitting the appropriate actions thereto while the camera is taking the pictures. The attendant will operate the push button to open the circuit at the times when the acts are silent and to close the circuit when sounds are again required and the performance continues until the picture has been taken in time with the sound record.

Fourth. The picture film or ribbon will then be developed and the perforations 50 will be made on the dividing lines between the spaces 68 on which those pictures occur at which the sound record was started or stopped so that when the film is run through the projection machine of this apparatus, the automatic action to start and stop the sound record will be caused as hereinbefore explained.

In order to cause the same picture record ribbon to start and stop the various sound effects at appropriate times, other holes out of line with the holes 50, as indicated at 50′, Fig. 3, may be made in the ribbon, and one or more other electro-pneumatic diaphragms with appropriate air ducts controlled by their respective line of holes may be applied within reasonable limits to operate step by step, through a circuit closer, the several sound record machines.

In order that the synchronism of the sound and motion record devices may be maintained or restored in spite of breakage of the picture ribbon or destruction of portions thereof, the ribbons will be supplied at intervals with consecutive designating characters as the numbers 69 so that if one or more sections of the ribbon become injured or destroyed, duplicates of such sections may be ordered and appropriately inserted in the ribbon from which the damaged sections are removed.

It is understood that various effect-producing means operated from the picture record device, as the ribbon of the picture machine, may be employed in connection with the picture machine, as for instance, mechanical devices for producing sound of

It is understood that the purpose of using the electro-pneumatic arrangement is to readily operate the starting and stopping means without injury to the film, and that the holes, that is to say the margins of such holes, may be made to operate mechanically, various mechanical arrangements by which said starting and stopping may be effected. Such mechanical arrangements are recognized as equivalents of the electro-pneumatic means shown, and their illustration is not herein attempted.

The air discharging from the air duct on the film will have a tendency to keep the film free from dust.

I claim:—

1. The combination with a motion picture machine provided with a ribbon, of pneumatic means to apply pneumatic pressure to one side of the ribbon; said ribbon being provided with perforations; a diaphragm arranged to be operated by pressure passing through such perforations; an electric circuit opened and closed by operation of said diaphragm; an electro-magnet in said circuit; an armature actuated by said electro-magnet; a sound reproducing machine; mechanism driven by the motion picture machine to operate the sound reproducing machine; and means controlled through said armature for operatively connecting and disconnecting the sound reproducing machine with said mechanism.

2. A motion picture machine comprising a ribbon and means for operating said ribbon; said ribbon being provided with picture spaces and with perforations on the lines between said picture spaces; means to supply pneumatic pressure on said picture ribbon, a sound reproducing machine and electro-pneumatic means actuated through said perforations to control the operation of the sound reproducing machine.

3. The combination with a motion picture machine and a sound reproducing machine, of mechanism for transmitting motion from the picture machine to the sound reproducing machine; an electro-magnet for controlling said mechanism; an electro-magnet controlled by the movement of the ribbon of the motion picture machine; and step by step mechanism operated by the last named electro-magnet for energizing and deënergizing the first named electro-magnet.

4. The combination with a motion picture machine and a sound reproducing machine of an electro-magnet; mechanism operated by the motion picture machine for operating the record device of the sound reproducing

said electro-magnet and an electro-magnet controlled by the film of the motion picture machine to operate the step by step circuit closer.

5. In an apparatus of the class set forth a step by step circuit closer comprising a ratchet wheel and a contact wheel; said ratchet wheel having twice as many teeth as the contact wheel; a motion picture machine provided with a ribbon; an electrical circuit having contacts which are connected and disconnected by the operation of the picture machine ribbon; an armature to operate the ratchet wheel; a magnet in said circuit to operate the armature; a sound reproducing machine; mechanism for operating the sound reproducing machine in synchronism with the motion picture machine; means to operatively connect and disconnect said mechanism and the sound reproducing machine, and an electrical circuit opened and closed by said step by step circuit closer to control said connecting and disconnecting means.

6. The combination in a motion picture and sound reproducing means, of a motion picture ribbon having therein perforations spaced therealong, means to apply fluid pressure to one side of the ribbon, and electro-pneumatic sound reproducing machine controlling means on the other side of the ribbon to be operated by fluid pressure through the perforations.

7. In a motion picture and sound reproducing apparatus, the combination with a motion picture ribbon having holes, of means for supplying air pressure, a sound producing machine and electro-pneumatic means operated by the passage of air under pressure through said holes, for the purpose of starting and stopping the sound-producing machine in synchronism with said motion picture ribbon.

8. The combination with a motion picture ribbon having perforations therethrough; of a guide having an aperture of proper dimension and arranged to communicate with said perforations as the ribbon is operated; means to supply to the ribbon air under pressure forced through said aperture; an electro-pneumatic device in opposition to said aperture to be operated by the air at such moment as the perforation in the motion picture ribbon coincides or registers with said aperture; a sound-producing machine used to produce the sounds which accompany the movements of the motion picture characters or objects as specified, and mechanism controlled by said electro-pneumatic device for starting or stopping the sound-producing machine at proper times.

9. The combination with a motion picture ribbon feeding device having a centrifugal speed controlling governor and a friction driving crank adjustable to drive the said motion picture ribbon feeding device without overpowering the controlling effect of the centrifugal governor; of a sound-producing machine and electro-pneumatic means for starting and stopping said sound-producing machine, said electro-pneumatic means operated by holes made in the proper places through the moving picture ribbon fed by the said motion picture ribbon feeding device as specified.

In testimony whereof, I have hereunto set my hand at Los Angeles, California, this 30th day of August, 1911.

EDWARD H. AMET.

In presence of—
JAMES R. TOWNSEND,
L. BELLE RICE.

ducing machine or an apparatus of this kind provided with a camera. The act will then be staged for performance and the motion picture machine, viz., the camera, will be started.

Third. When all is ready for the sound producing action, the operator will press the push button switch 43 thus energizing the electro-magnet and causing the record driving shaft 46 to rotate, thus operating the sound record device 69 until the starting signal is sounded, thereby; and thereupon the act will be performed; the actors being guided in time by the reproduced sounds; fitting the appropriate actions thereto while the camera is taking the pictures. The attendant will operate the push button to open the circuit at the times when the acts are silent and to close the circuit when sounds are again required and the performance continues until the picture has been taken in time with the sound record.

Fourth. The picture film or ribbon will then be developed and the perforations 50 will be made on the dividing lines between the spaces 68 on which those pictures occur at which the sound record was started or stopped so that when the film is run through the projection machine of this apparatus, the automatic action to start and stop the sound record will be caused as hereinbefore explained.

In order to cause the same picture record ribbon to start and stop the various sound effects at appropriate times, other holes out of line with the holes 50, as indicated at 50′, Fig. 3, may be made in the ribbon, and one or more other electro-pneumatic diaphragms with appropriate air ducts controlled by their respective line of holes may be applied within reasonable limits to operate step by step, through a circuit closer, the several sound record machines.

In order that the synchronism of the sound and motion record devices may be maintained or restored in spite of breakage of the picture ribbon or destruction of portions thereof, the ribbons will be supplied at intervals with consecutive designating characters as the numbers 69 so that if one or more sections of the ribbon become injured or destroyed, duplicates of such sections may be ordered and appropriately inserted in the ribbon from which the damaged sections are removed.

It is understood that various effect-producing means operated from the picture record device, as the ribbon of the picture machine, may be employed in connection with the picture machine, as for instance, mechanical devices for producing sound effects, as thunder, clatter of horses' hoofs, drum-beating, etc., and I regard this invention as being applicable through a wide range of equivalents.

It is understood that the purpose of using the electro-pneumatic arrangement is to readily operate the starting and stopping means without injury to the film, and that the holes, that is to say the margins of such holes, may be made to operate mechanically, various mechanical arrangements by which said starting and stopping may be effected. Such mechanical arrangements are recognized as equivalents of the electro-pneumatic means shown, and their illustration is not herein attempted.

The air discharging from the air duct on the film will have a tendency to keep the film free from dust.

I claim:—

1. The combination with a motion picture machine provided with a ribbon, of pneumatic means to apply pneumatic pressure to one side of the ribbon; said ribbon being provided with perforations; a diaphragm arranged to be operated by pressure passing through such perforations; an electric circuit opened and closed by operation of said diaphragm; an electro-magnet in said circuit; an armature actuated by said electro-magnet; a sound reproducing machine; mechanism driven by the motion picture machine to operate the sound reproducing machine; and means controlled through said armature for operatively connecting and disconnecting the sound reproducing machine with said mechanism.

2. A motion picture machine comprising a ribbon and means for operating said ribbon; said ribbon being provided with picture spaces and with perforations on the lines between said picture spaces; means to supply pneumatic pressure on said picture ribbon, a sound reproducing machine and electro-pneumatic means actuated through said perforations to control the operation of the sound reproducing machine.

3. The combination with a motion picture machine and a sound reproducing machine, of mechanism for transmitting motion from the picture machine to the sound reproducing machine; an electro-magnet for controlling said mechanism; an electro-magnet controlled by the movement of the ribbon of the motion picture machine; and step by step mechanism operated by the last named electro-magnet for energizing and deënergizing the first named electro-magnet.

4. The combination with a motion picture machine and a sound reproducing machine of an electro-magnet; mechanism operated by the motion picture machine for operating the record device of the sound reproducing machine; means controlled by said electro-magnet to control the operation of the sound reproducing machine through said mechanism; a step by step circuit closer to control

said electro-magnet and an electro-magnet controlled by the film of the motion picture machine to operate the step by step circuit closer.

5. In an apparatus of the class set forth a step by step circuit closer comprising a ratchet wheel and a contact wheel; said ratchet wheel having twice as many teeth as the contact wheel; a motion picture machine provided with a ribbon; an electrical circuit having contacts which are connected and disconnected by the operation of the picture machine ribbon; an armature to operate the ratchet wheel; a magnet in said circuit to operate the armature; a sound reproducing machine; mechanism for operating the sound reproducing machine in synchronism with the motion picture machine; means to operatively connect and disconnect said mechanism and the sound reproducing machine, and an electrical circuit opened and closed by said step by step circuit closer to control said connecting and disconnecting means.

6. The combination in a motion picture and sound reproducing means, of a motion picture ribbon having therein perforations spaced therealong, means to apply fluid pressure to one side of the ribbon, and electro-pneumatic sound reproducing machine controlling means on the other side of the ribbon to be operated by fluid pressure through the perforations.

7. In a motion picture and sound reproducing apparatus, the combination with a motion picture ribbon having holes, of means for supplying air pressure, a sound producing machine and electro-pneumatic means operated by the passage of air under pressure through said holes, for the purpose of starting and stopping the sound-producing machine in synchronism with said motion picture ribbon.

8. The combination with a motion picture ribbon having perforations therethrough; of a guide having an aperture of proper dimension and arranged to communicate with said perforations as the ribbon is operated; means to supply to the ribbon air under pressure forced through said aperture; an electro-pneumatic device in opposition to said aperture to be operated by the air at such moment as the perforation in the motion picture ribbon coincides or registers with said aperture; a sound-producing machine used to produce the sounds which accompany the movements of the motion picture characters or objects as specified, and mechanism controlled by said electro-pneumatic device for starting or stopping the sound-producing machine at proper times.

9. The combination with a motion picture ribbon feeding device having a centrifugal speed controlling governor and a friction driving crank adjustable to drive the said motion picture ribbon feeding device without overpowering the controlling effect of the centrifugal governor; of a sound-producing machine and electro-pneumatic means for starting and stopping said sound-producing machine, said electro-pneumatic means operated by holes made in the proper places through the moving picture ribbon fed by the said motion picture ribbon feeding device as specified.

In testimony whereof, I have hereunto set my hand at Los Angeles, California, this 30th day of August, 1911.

EDWARD H. AMET.

In presence of—

JAMES R. TOWNSEND,

L. BELLE RICE.

980

F. B. CANNOCK.

KINETOSCOPE PROJECTOR.

APPLICATION FILED JULY 25, 1912.

1,075,692.

Patented Oct. 14, 1913.

2 SHEETS—SHEET 1.

Fig. 1.

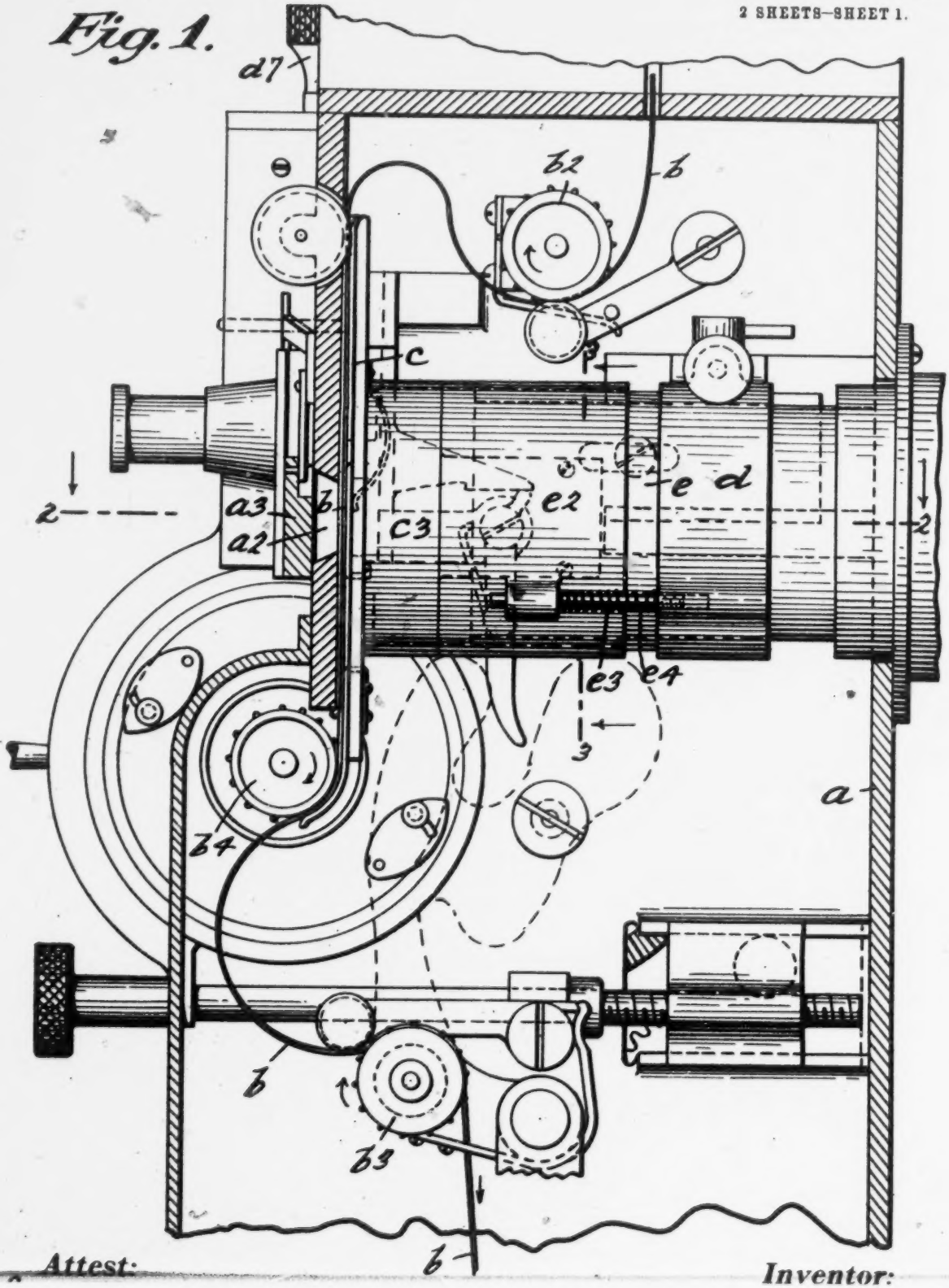

Attest:

Inventor:

F. B. CANNOCK.

KINETOSCOPE PROJECTOR.

APPLICATION FILED JULY 25, 1912.

1,075,692.

Patented Oct. 14, 1913.

2 SHEETS—SHEET 1.

Fig. 1.

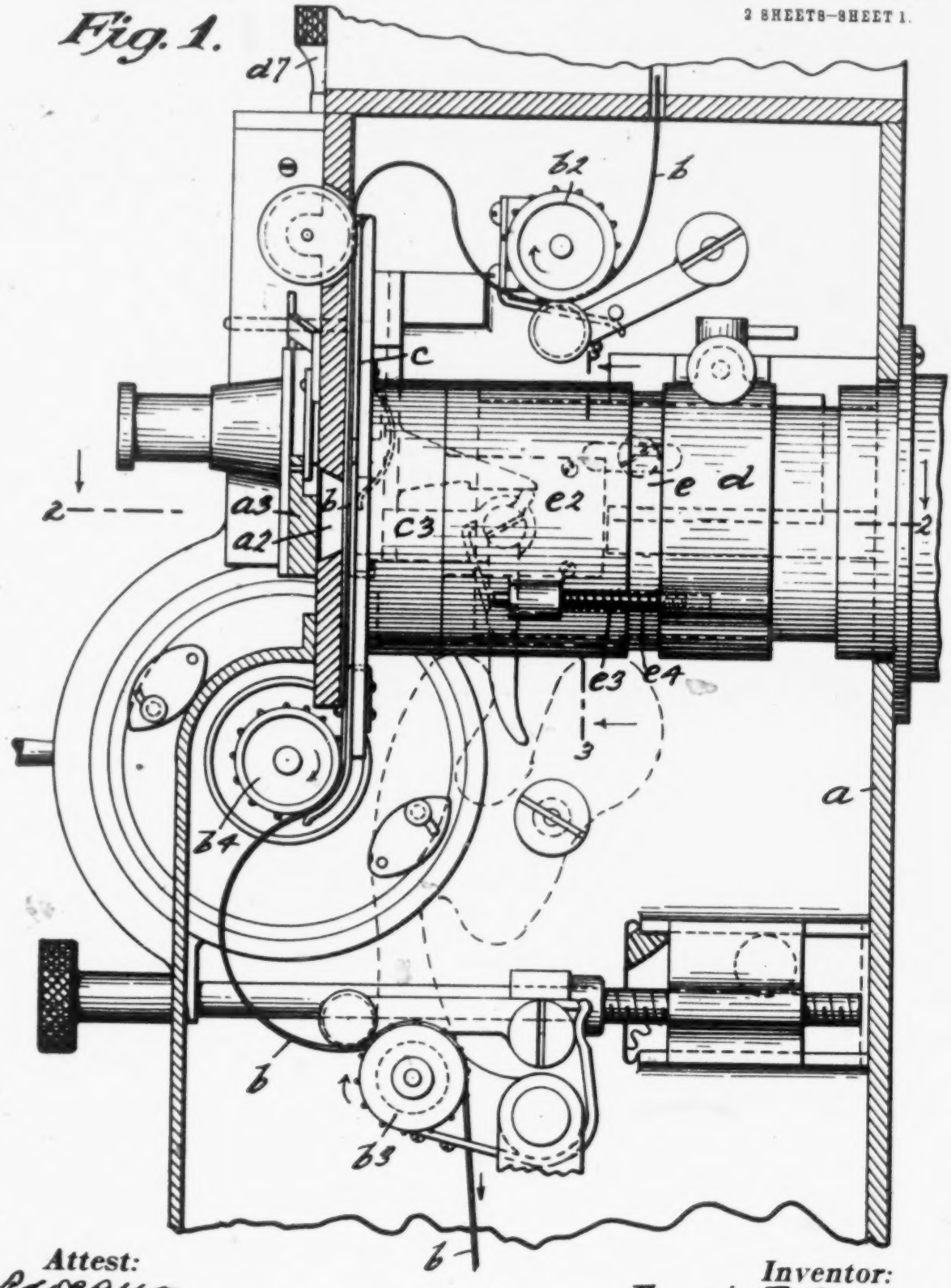

Attest:

Robt. B. Abbott

W. H. Champeny

by

Inventor:

Francis B. Cannock

J. Chris Larsen

Atty

F. B. CANNOCK.

KINETOSCOPE PROJECTOR.

APPLICATION FILED JULY 25, 1912.

1,075,692.

Patented Oct. 14, 1913.

2 SHEETS—SHEET 2.

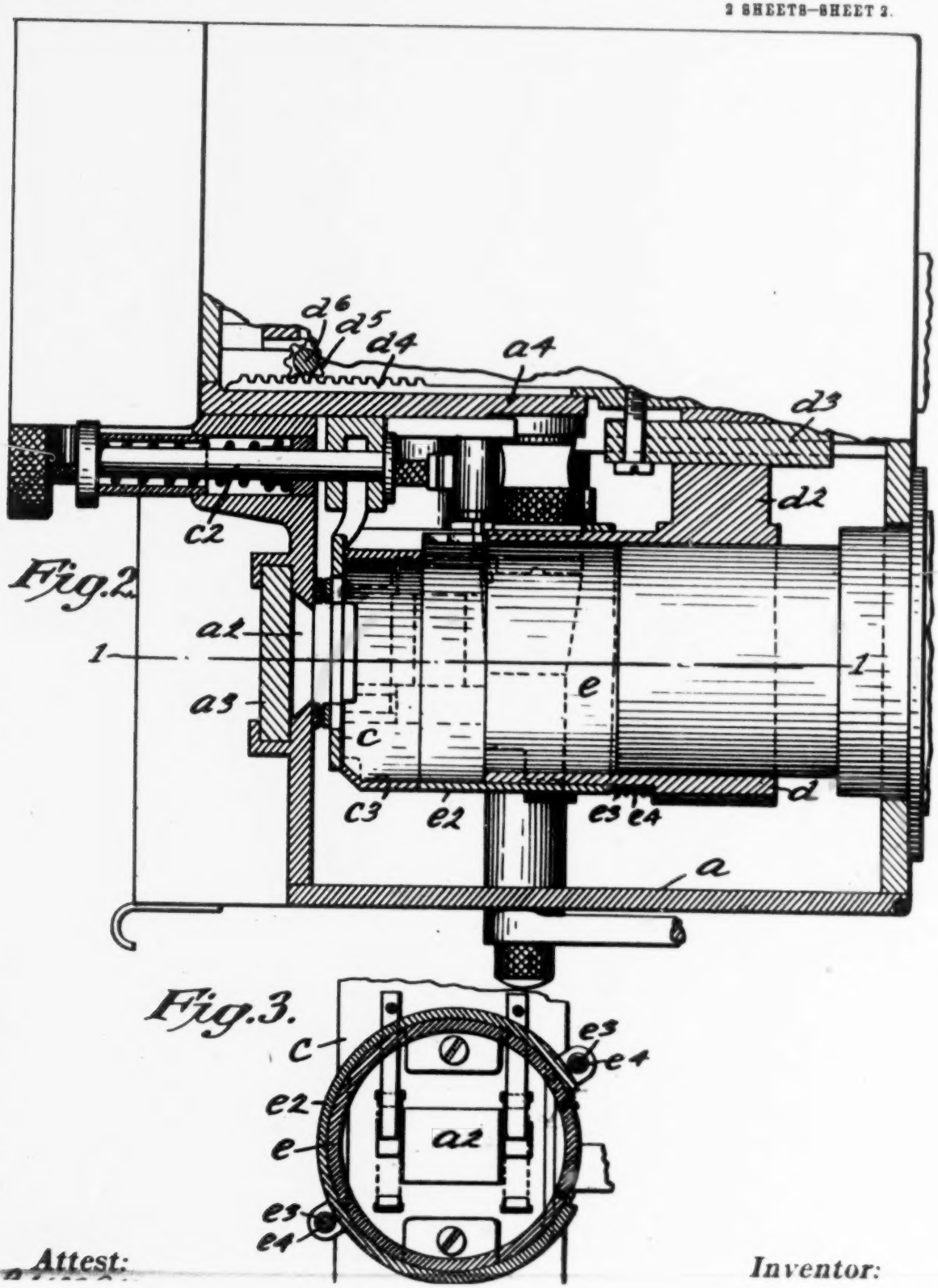

Fig. 2.

Fig. 3.

Attest:

Inventor:

UNITED STATES PATENT OFFICE.

FRANCIS B. CANNOCK, OF NEW YORK, N. Y.

KINETOSCOPE-PROJECTOR.

1,075,692. Specification of Letters Patent. Patented Oct. 14, 1913.

Application filed July 25, 1912. Serial No. 711,383.

To all whom it may concern:

Be it known that I, FRANCIS B. CANNOCK, a citizen of the United States of America, and residing at New York, in the county of New York and State of New York, have invented certain new and useful Improvements in Kinetoscope-Projectors, of which the following is a specification, such as will enable those skilled in the art to which it appertains to make and use the same.

This invention relates to kinetoscopes, with a particular reference to the projectors thereof, and through which a strip of film bearing photographed matter is intermittently passed across a suitable aperture for a powerful ray of light, generally electric, of sufficient intensity to ignite the film if it be permitted to remain motionless in the path of the light for even a brief period, and it is to avoid any possibility of such ignition that my invention was conceived, for many serious accidents have occurred in just such a manner in moving picture theaters.

The film is generally carried from a reel through the projector and thence to a rewind reel, suitable mechanism being employed to move the film in the desired manner, but it frequently happens that the rewind reel does not move rapidly enough, or even clogs, with the result that the film already past the aperture backs up and is formed into loops between the aperture and the projecting lens where it is subjected to the intense heat of the ray of light and, igniting, causes a panic, but, even if the film is not ignited, the backed-up loops intercept the light and prevent projection of the pictures on the film at the aperture, thus compelling the operator to stop his machine until the backed-up film is carried to the rewind reel but, by means of my invention, no film can back up into the path of the light and thus no accidents can result from film ignition nor will the projection be interfered with.

The object of my invention is, therefore, to provide means for preventing the film from getting into the path of the light, except in the normal manner across the aperture; a further object is to provide such means which do not in any manner interfere with the normal operation of the projecting lens; a further object is to make this barrel telescopic whereby the length thereof will be variable and accommodate itself to the movement of the film-trap door in the threading of a new film through the projector, and also permitting the removal of the said door for cleansing or repair; a further object is to so form the said barrel as to permit of the focusing of the lens without disarranging the substantially light-proof characteristics of the said barrel; and still further objects are to provide such protective devices which are very simple in construction, installation, and use; which are perfectly adapted to the purposes for which they are designed; and which are very inexpensive.

My invention is fully set forth in the following specification, of which the accompanying drawings form a part, in which the separate parts are designated by the same reference characters in each of the views, and in which:—

Figure 1 is vertical section taken through a portion of a projector provided with my invention, the latter not being in section, and approximately on the line 1—1 of Fig. 2; Fig. 2 is a horizontal section taken on the line 2—2 of Fig. 1; and Fig. 3 is a transverse section taken on the line 3—3 of Fig. 1.

In the drawings forming a part of this application I have shown a casing a entirely inclosing the operative parts of a projector, only a portion of which, however, are shown as they form no part of this invention, the general arrangement of parts being clearly shown in Figs. 1 and 3 of U. S. patent to Porter, No. 1,041,345, of Oct. 15, 1912, but I do show the film b passed around the constantly moving sprockets b^2 and b^3 and the intermittent sprocket b^4, said film being held firmly in position against the rear wall of the casing adjacent the aperture a^2 by means of a film-trap door c, said aperture being closed when the projector is inoperative by means of a fire-door a^3 which is adapted to be automatically opened as soon as operation begins, this mechanism not being shown as it forms no part of this invention and may be made in any suitable or desired manner.

KINETOSCOPE PROJECTOR.

APPLICATION FILED JULY 25, 1912.

1,075,692. Patented Oct. 14, 1913.

2 SHEETS—SHEET 2.

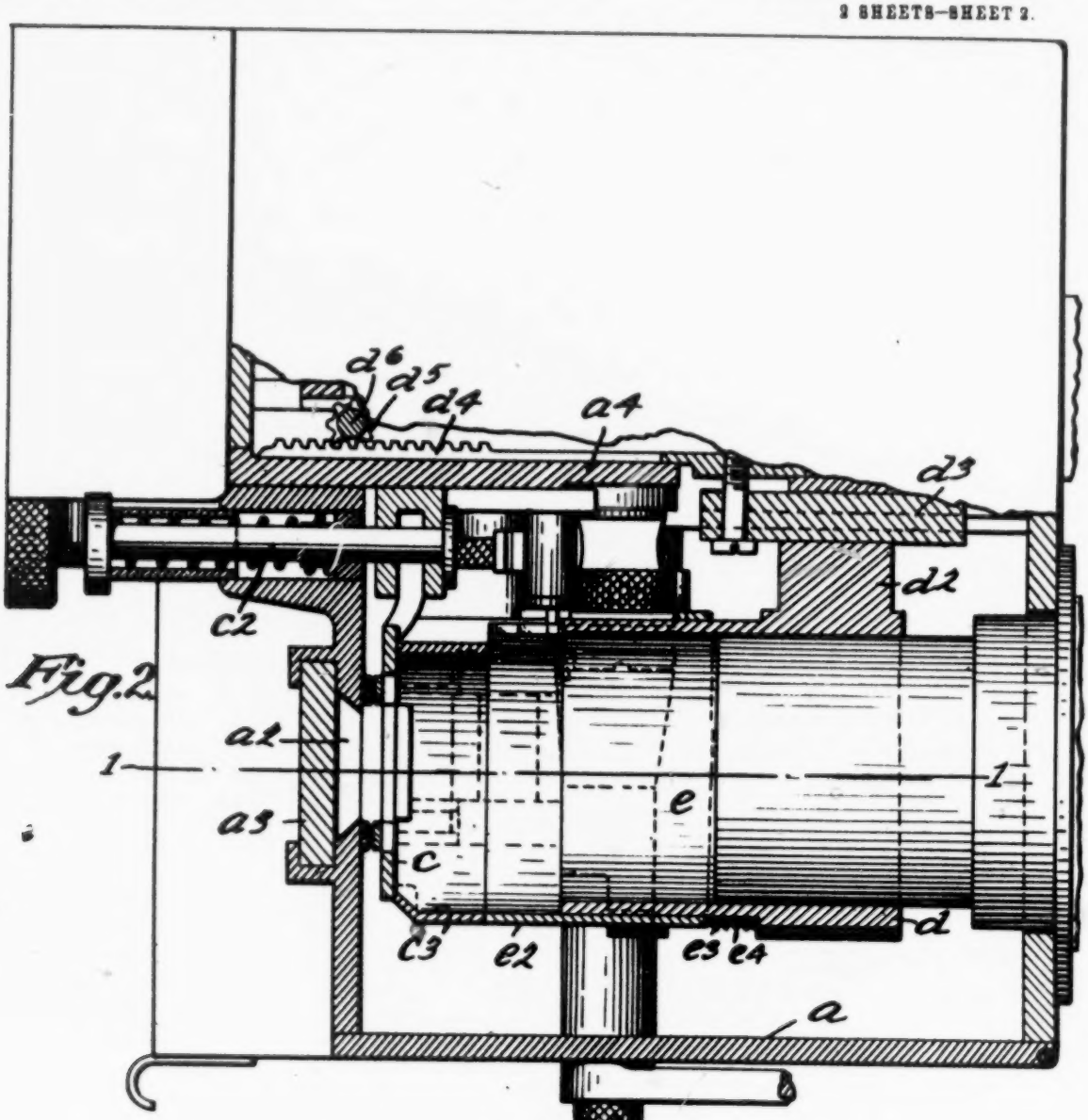

Fig. 2.

Fig. 3.

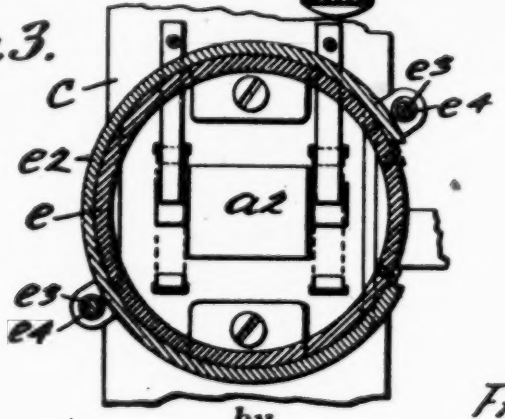

Attest:
Robt. H. Abbott
W. H. Champion

Inventor:
Francis B. Cannock
by
J. Chris Larsen
Atty

FRANCIS B. CANNOCK, OF NEW YORK, N. Y.

KINETOSCOPE-PROJECTOR.

1,075,692. Specification of Letters Patent. Patented Oct. 14, 1913.

Application filed July 25, 1912. Serial No. 711,263.

To all whom it may concern:

Be it known that I, FRANCIS B. CANNOCK, a citizen of the United States of America, and residing at New York, in the county of New York and State of New York, have invented certain new and useful Improvements in Kinetoscope-Projectors, of which the following is a specification, such as will enable those skilled in the art to which it appertains to make and use the same.

This invention relates to kinetoscopes, with a particular reference to the projectors thereof, and through which a strip of film bearing photographed matter is intermittently passed across a suitable aperture for a powerful ray of light, generally electric, of sufficient intensity to ignite the film if it be permitted to remain motionless in the path of the light for even a brief period, and it is to avoid any possibility of such ignition that my invention was conceived, for many serious accidents have occurred in just such a manner in moving picture theaters.

The film is generally carried from a reel through the projector and thence to a rewind reel, suitable mechanism being employed to move the film in the desired manner, but it frequently happens that the rewind reel does not move rapidly enough, or even clogs, with the result that the film already past the aperture backs up and is formed into loops between the aperture and the projecting lens where it is subjected to the intense heat of the ray of light and, igniting, causes a panic, but, even if the film is not ignited, the backed-up loops intercept the light and prevent projection of the pictures on the film at the aperture, thus compelling the operator to stop his machine until the backed-up film is carried to the rewind reel but, by means of my invention, no film can back up into the path of the light and thus no accidents can result from film ignition nor will the projection be interfered with.

The object of my invention is, therefore, to provide means for preventing the film from getting into the path of the light, except in the normal manner across the aperture; a further object is to provide such means which do not in any manner interfere with the normal operation of the projector or of any or its parts; a further object is to provide a substantially light-proof barrel or cylinder extending the full distance from the film being projected to the projecting lens; a further object is to make this barrel telescopic whereby the length thereof will be variable and accommodate itself to the movement of the film-trap door in the threading of a new film through the projector, and also permitting the removal of the said door for cleansing or repair; a further object is to so form the said barrel as to permit of the focusing of the lens without disarranging the substantially light-proof characteristics of the said barrel; and still further objects are to provide such protective devices which are very simple in construction, installation, and use; which are perfectly adapted to the purposes for which they are designed; and which are very inexpensive.

My invention is fully set forth in the following specification, of which the accompanying drawings form a part, in which the separate parts are designated by the same reference characters in each of the views, and in which:—

Figure 1 is vertical section taken through a portion of a projector provided with my invention, the latter not being in section, and approximately on the line 1—1 of Fig. 2; Fig. 2 is a horizontal section taken on the line 2—2 of Fig. 1; and Fig. 3 is a transverse section taken on the line 3—3 of Fig. 1.

In the drawings forming a part of this application I have shown a casing *a* entirely inclosing the operative parts of a projector, only a portion of which, however, are shown as they form no part of this invention, the general arrangement of parts being clearly shown in Figs. 1 and 3 of U. S. patent to Porter, No. 1,041,345, of Oct. 15, 1912, but I do show the film *b* passed around the constantly moving sprockets b^2 and b^3 and the intermittent sprocket b^4, said film being held firmly in position against the rear wall of the casing adjacent the aperture a^2 by means of a film-trap door *c*, said aperture being closed when the projector is inoperative by means of a fire-door a^3 which is adapted to be automatically opened as soon as operation begins, this mechanism not being shown as it forms no part of this invention and may be made in any suitable or desired manner.

The film-trap door *c* is carried by a spring-actuated plunger-rod c^2 and is adapted to be removed therefrom for cleaning or repair in any desired manner, the reason for show-

ing this being to show the relationship between the same and my invention, and I provide the door c with a cylindrical collar c^3 concentric, or approximately so, with the aperture a^2, said collar being preferably secured to the trap door and removable therewith.

At d I have shown the lens mount carried by an arm d^2, Fig. 2, secured to a slide-block d^3 movable and guided in a partition a^4 within the casing a, said block being adapted to be reciprocated to adjust the focus of the lens by means of a rack d^4 secured thereto and enmeshed with a pinion d^5 on a vertical rod d^6 extending above the casing and provided with a button d^7 whereby it may be manipulated to adjust the lens from the casing exterior.

Secured to, or integral with, the lens mount d is a tube or barrel e which extends a predetermined distance in a rearward direction, and slidably mounted upon the barrel e is a sleeve e^2 adapted to be guided by rods e^3 secured to the mount d and also adapted to be maintained in a rearward position by means of coil-springs e^4 on said rods, thus permitting a forward movement of the sleeve e^2 against the action of the springs, and it will be noted that the sleeve e^2 registers with, or approximately so, the collar c^3 thus forming, normally, an uninterrupted cylindrical chamber between the film-trap door c and the lens within the mount, said mount extending beyond the forward side of the casing a, as shown, and it will be apparent, by means of this construction, that the lens may be adjusted rearwardly or forwardly, and the film-trap door may be moved forwardly by means of the plunger-rod c^2 to thread the film or to remove the door from its carrier, the springs e^4 always maintaining the sleeve e^2 in close contact with the collar c^3.

In the operation of projectors it frequently happens that the film already passed across the aperture is not taken up by the rewind reel, and said film is therefore looped within the casing, as indicated by dotted lines in Fig. 1, heretofore reaching the space between the aperture and the lens and thus being in the path of the light and preventing projection of the pictures passing the aperture and also being liable to ignition, but by means of my invention this is positively prevented, the film thus not taken up being prevented from reaching the path of the light because of the barrel e and sleeve e^2, and the projection is improved because the rays of light passing through the projector are confined, as will be seen.

While I have shown my invention in conjunction with an inclosing casing, it is not essential that it be employed therewith, as it will operate with equal efficiency on any of the projectors using merely a supporting frame for the parts, my intent being to prevent the film from being abnormally moved into the path of light and, while I have shown a present preferred method of producing this result, it will be obvious that many changes may be made therein in order to accommodate the invention to various types of projectors, and to meet varying conditions and, with a reservation to myself of all such changes in and modifications of the details shown and described, what I claim as new and desire to secure by Letters Patent, is:—

1. In a projector provided with a light aperture and a strip of film passed thereover; a movable film-trap door, a movable lens mount, an element on said door and carried thereby, and a coacting element on said mount and carried thereby, said elements serving to prevent the film from entering between said door and mount.

2. In a projector provided with a light aperture and a strip of film passed thereover; a movable film-trap door, a movable lens mount, a tube carried by said door, and a coacting tube carried by said mount, said tubes jointly preventing the film from passing between said door and mount.

3. In a projector provided with a light aperture and a strip of film passed thereover; a film-trap door, a lens, and a spring-actuated, telescopic, casing extending from said door to said lens and permitting the movement of each.

In testimony that I claim the foregoing as my invention I have signed my name in presence of the subscribing witnesses this 18th day of July 1912.

FRANCIS B. CANNOCK.

Witnesses:
ROBT. B. ABBOTT,
J. C. LARSEN.

986

F. W. LANCHESTER.

DAMPING TORSIONAL VIBRATIONS IN CRANK SHAFTS.

APPLICATION FILED NOV. 28, 1910.

1,085,443. Patented Jan. 27, 1914.

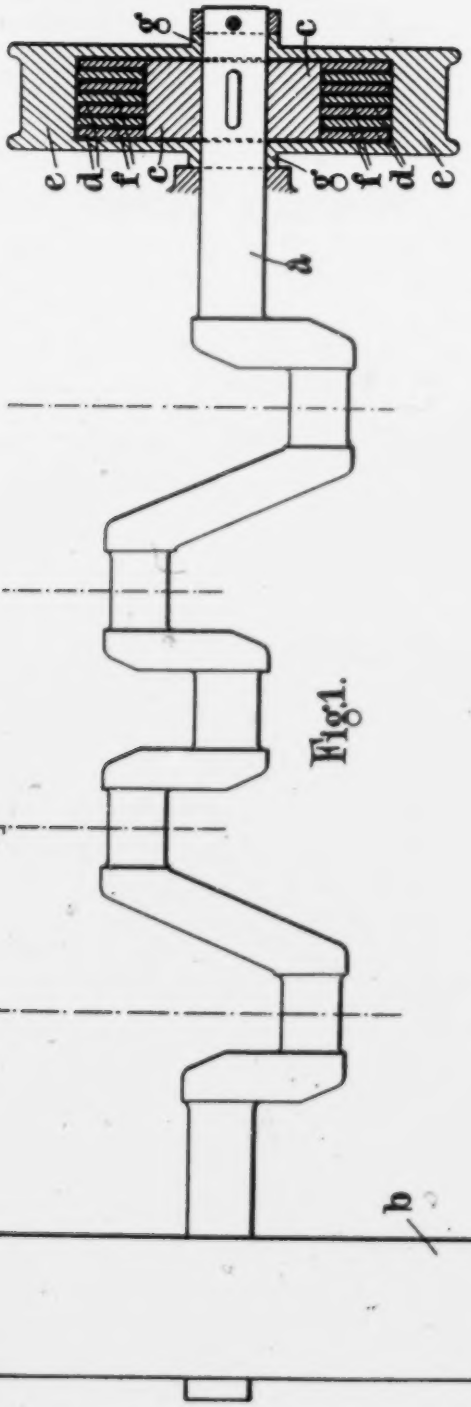

Fig.1.

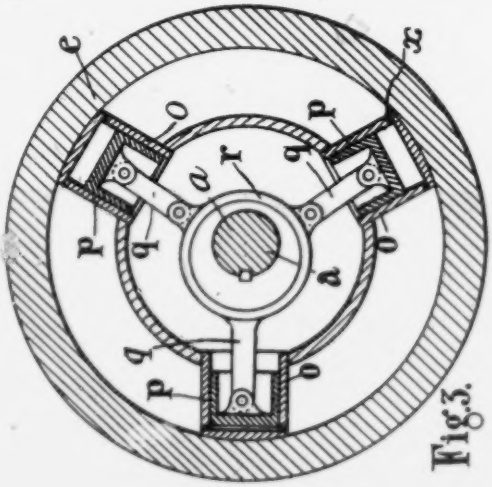

Fig.3.

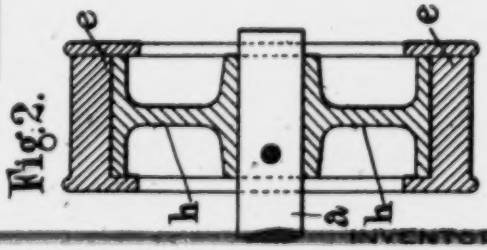

Fig.2.

WITNESSES

INVENTOR

UNITED STATES PATENT OFFICE.

FREDERICK WILLIAM LANCHESTER, OF EDGBASTON, BIRMINGHAM, ENGLAND.

DAMPING TORSIONAL VIBRATIONS IN CRANK-SHAFTS.

1,085,443. Specification of Letters Patent. Patented Jan. 27, 1914.

Application filed November 28, 1910. Serial No. 594,474.

To all whom it may concern:

Be it known that I, FREDERICK WILLIAM LANCHESTER, a subject of the King of Great Britain and Ireland, and residing at 53 Hagley road, Edgbaston, Birmingham, in the county of Warwick, England, have invented certain new and useful Improvements for Damping Torsional Vibrations in Crank-Shafts, of which the following is a specification.

The present invention relates to improvements in high speed reciprocating engines, and more especially to an improved method of and apparatus for eliminating certain forms of vibration in the running of high speed multicylinder engines, such as the four and six cylinder internal combustion engines used for the propulsion of motor vehicles.

In apparatus requiring means for the elimination of torque variation it has been common to employ heavy flywheels for the purpose, such flywheels being attached to their shafts by non positive connections such as springs or cylinders and pistons coöperating through an elastic fluid, such elastic means being adapted to absorb excess energy during certain periods and to restore such energy to the system during certain succeeding periods. Again, when a heavy flywheel has been employed for eliminating torque variations in apparatus subjected to sudden stoppages, it has been common, in order to prevent rupture of the shaft, to attach the flywheel to its shaft by a device capable of slipping such as a friction clutch.

In high speed multicylinder internal combustion engines such as are used in vehicle propulsion the elimination of torque variations is effected in the usual way by the use of a heavy flywheel secured to the crank shaft. Such crank shafts present a new problem to the designer, however, for at certain speeds of rotation it is found that objectionable, and sometimes dangerous, torsional vibrations are set up, and the object of the present invention is to eliminate such vibrations.

A crank shaft for multicylinder reciprocating engines may be regarded to a certain extent in the manner of a second flywheel, and this is especially the case in a six-throw crank. The crank shaft, therefore, is equivalent to a torsionally elastic shaft with a distribution of bodies having moments of inertia along its length and it will be seen that under these conditions, torsional vibration may be set up by any suitable exciting torque.

In multicylinder reciprocating engines, particularly internal combustion engines, such torques exist in the intermittent impulses of the explosions, and in the inertia effects of the reciprocating masses. The piston and connecting rod in reciprocation bring about a series of four alternations of torque on the crank shaft during each revolution. If the vibration were strictly of the character which exists when a single length of shaft is fitted with two flywheels rigidly attached, the resulting vibration would not be felt by the casing of the engine, because the whole of the torque variations in such a system are self-contained in the rotating elements, and therefore, the present invention does not apply to devices where parts in pure rotation are concerned. Where, however, the second rotational part exists partially or wholly in the form of reciprocating elements, the individual variations in the energy of these reciprocating elements result in considerable torque being set up, following the vibrations of the rotating system, but communicated to the stationary system of the engine. I have found that this form of vibration causes great trouble in the case of six-cylinder engines, as used in the automobile industry, and results in the production of violent vibrations, which are transmitted to the body of the car at and above certain definite speeds.

The object of the invention is to destroy or diminish the synchronous vibrations above referred to, and so to render an engine of light weight and comparatively non-rigid construction, free from vibration periods such as are commonly met with in engines at present in use.

The invention consists in means for elimi-

F. W. LANCHESTER.

DAMPING TORSIONAL VIBRATIONS IN CRANK SHAFTS.

APPLICATION FILED NOV. 28, 1910.

1,085,443.

Patented Jan. 27, 1914.

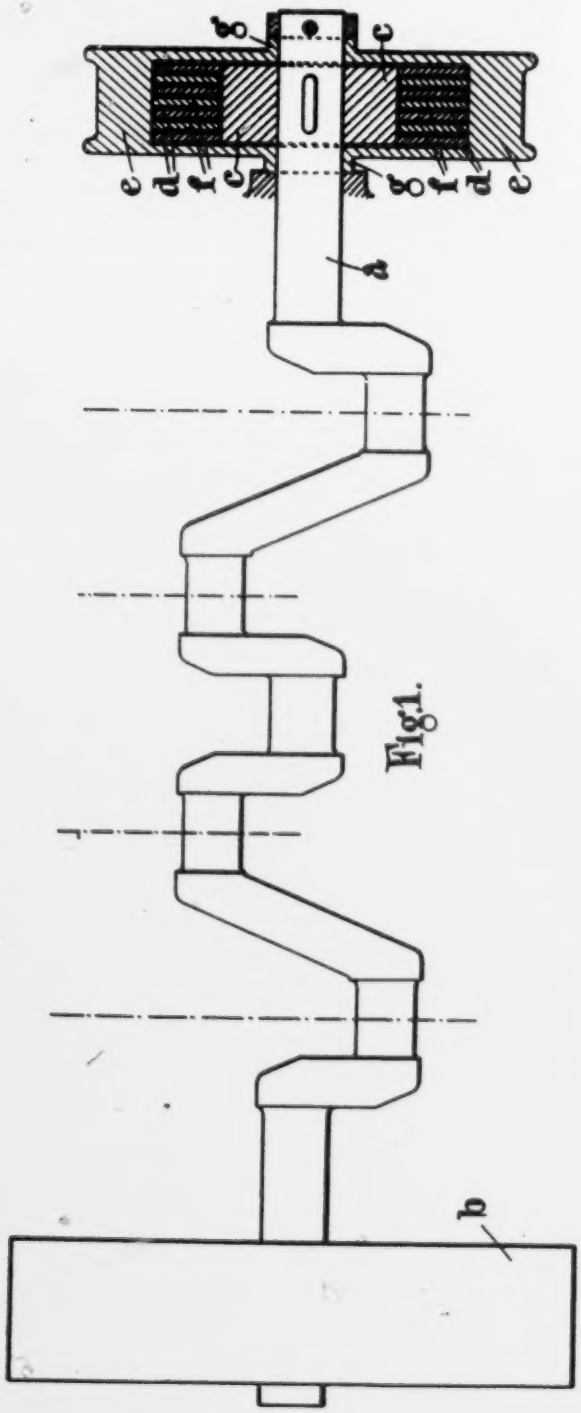

Fig.1.

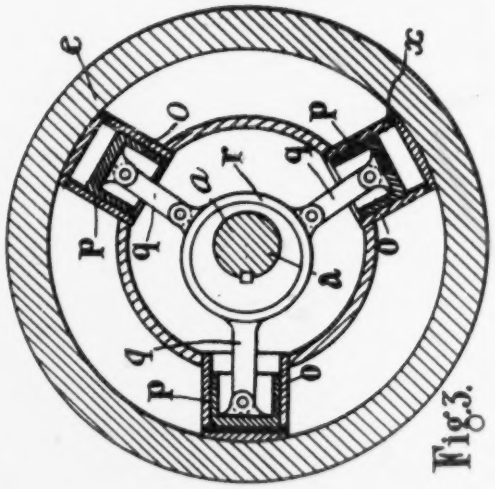

Fig.3.

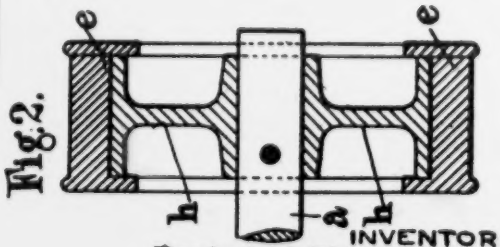

Fig.2.

WITNESSES

A. E. Davis

P. D. Rollhaus

INVENTOR

Frederick William Lanchester.

BY

ATTORNEYS

UNITED STATES PATENT OFFICE.

FREDERICK WILLIAM LANCHESTER, OF EDGBASTON, BIRMINGHAM, ENGLAND.

DAMPING TORSIONAL VIBRATIONS IN CRANK-SHAFTS.

1,085,443. Specification of Letters Patent. Patented Jan. 27, 1914.

Application filed November 28, 1910. Serial No. 594,474.

To all whom it may concern:

Be it known that I, FREDERICK WILLIAM LANCHESTER, a subject of the King of Great Britain and Ireland, and residing at 53 Hagley road, Edgbaston, Birmingham, in the county of Warwick, England, have invented certain new and useful Improvements for Damping Torsional Vibrations in Crank-Shafts, of which the following is a specification.

The present invention relates to improvements in high speed reciprocating engines, and more especially to an improved method of and apparatus for eliminating certain forms of vibration in the running of high speed multicylinder engines, such as the four and six cylinder internal combustion engines used for the propulsion of motor vehicles.

In apparatus requiring means for the elimination of torque variation it has been common to employ heavy flywheels for the purpose, such flywheels being attached to their shafts by non positive connections such as springs or cylinders and pistons coöperating through an elastic fluid, such elastic means being adapted to absorb excess energy during certain periods and to restore such energy to the system during certain succeeding periods. Again, when a heavy flywheel has been employed for eliminating torque variations in apparatus subjected to sudden stoppages, it has been common, in order to prevent rupture of the shaft, to attach the flywheel to its shaft by a device capable of slipping such as a friction clutch.

In high speed multicylinder internal combustion engines such as are used in vehicle propulsion the elimination of torque variations is effected in the usual way by the use of a heavy flywheel secured to the crank shaft. Such crank shafts present a new problem to the designer, however, for at certain speeds of rotation it is found that objectionable, and sometimes dangerous, torsional vibrations are set up, and the object of the present invention is to eliminate such vibrations.

A crank shaft for multicylinder reciprocating engines with several throws is a very elastic body, and is commonly loaded at one end or near one end by a flywheel of great moment of inertia, and is further loaded at different points along its length by inertia masses in the form of pistons, connecting rods, etc. These inertia masses act to a certain extent in the manner of a second flywheel, and this is especially the case in a six-throw crank. The crank shaft, therefore, is equivalent to a torsionally elastic shaft with a distribution of bodies having moments of inertia along its length and it will be seen that under these conditions, torsional vibration may be set up by any suitable exciting torque.

In multicylinder reciprocating engines, particularly internal combustion engines, such torques exist in the intermittent impulses of the explosions, and in the inertia effects of the reciprocating masses. The piston and connecting rod in reciprocation bring about a series of four alternations of torque on the crank shaft during each revolution. If the vibration were strictly of the character which exists when a single length of shaft is fitted with two flywheels rigidly attached, the resulting vibration would not be felt by the casing of the engine, because the whole of the torque variations in such a system are self-contained in the rotating elements, and therefore, the present invention does not apply to devices where parts in pure rotation are concerned. Where, however, the second rotational part exists partially or wholly in the form of reciprocating elements, the individual variations in the energy of these reciprocating elements result in considerable torque being set up, following the vibrations of the rotating system, but communicated to the stationary system of the engine. I have found that this form of vibration causes great trouble in the case of six-cylinder engines, as used in the automobile industry, and results in the production of violent vibrations, which are transmitted to the body of the car at and above certain definite speeds.

The object of the invention is to destroy or diminish the synchronous vibrations above referred to, and so to render an engine of light weight and comparatively non-rigid construction, free from vibration periods such as are commonly met with in engines at present in use.

The invention consists in means for eliminating torsional vibration in the crank shaft of a high speed reciprocating engine comprising a rotational damper consisting of a body of adequate moment of inertia connected to the crank shaft by a yielding coupling operating by friction between surfaces or by fluid, frictional or viscous action.

Referring to the accompanying drawings, Figure 1 shows a crank shaft of a four-cylinder motor with one form of my invention applied thereto; Fig. 2 shows a modified method of applying the invention; Fig. 3 shows a construction in which the coupling is effected by means of fluid pressure.

In carrying the invention into effect according to the modification shown in Fig. 1 there is keyed to the rotating shaft *a* at the end farthest from the flywheel *b* a coupling piece *c* provided with ribs *d* projecting outwardly. Over the coupling piece *c* there is fitted a heavy wheel *e* having internally projecting ribs *f* projecting between the ribs *d* of the coupling piece. The heavy wheel *e* is provided with a bearing *g* on the crank shaft. A suitable oil film is formed between the heavy wheel *e* and its ribs and the coupling piece *c*. In this form of the invention if the shaft is rotating uniformly the heavy wheel *e* is carried around at the same velocity as the shaft. If, however, owing to the action of the connecting rods on the shaft, there is at any given speed a tendency to set up torsional oscillations at the end *a* of the shaft, these oscillations cause variations of speed between the end of the shaft *a* and the uniformly moving heavy wheel *e*, and the pull between the coupling piece *c* and the heavy wheel *e* through the oil film will tend to damp out these oscillations.

In the form of the invention shown in Fig. 2 the heavy wheel *e* is formed so that it takes a bearing on the wheel A keyed to the shaft *a*, an oil film being provided between the wheels *e* and A.

In the form of the invention shown in Fig. 3 the heavy wheel *e* is provided with a number of cylinders *o* in which work pistons *p* connected by connecting rods *q* with a sleeve *r* keyed to the shaft *a*. The space between the pistons and the heads of the cylinders is filled with a suitable liquid, and suitable restricted passages *s* are provided whereby this liquid can be forced out or in should there be a tendency to relative movement between the shaft and the heavy wheel. In this form of the invention it is essential that the wheel should do some work.

Having thus described my invention what I claim as new and desire to secure by Letters Patent is:—

1. In a high speed reciprocating engine in combination a crankshaft having a number of cranks, a flywheel fixed on said crankshaft and means for preventing torsional vibration of said shaft including a second flywheel mounted on said crankshaft at a distance from said fixed flywheel and a yielding coupling connecting said second flywheel to said crankshaft.

2. In a high speed reciprocating engine in combination a crankshaft having a plurality of cranks, a flywheel fixed at one end of said crankshaft and means for preventing torsional vibration of said shaft including a second flywheel applied to said crankshaft at a distance from said first flywheel and a fluid frictional coupling connecting said second flywheel to said crankshaft.

3. In a high speed reciprocating engine in combination a crankshaft having a plurality of cranks, a flywheel fixed at one end of said crankshaft and means for preventing torsional vibration of said shaft including a member attached to said crankshaft at a distance from said flywheel said member having a projecting surface, a heavy wheel having a surface opposed to said projecting surface and an oil film between said surfaces, as set forth.

4. In a high speed reciprocating engine in combination a crankshaft having a plurality of cranks, a flywheel fixed at one end of said crankshaft and means for preventing torsional vibration of said shaft including a member keyed to the other end of said crankshaft, a number of disks attached to said member and projecting in a radial direction, a second flywheel, a number of rings projecting from said flywheel between said disks, and oil films between said rings and disks, as set forth.

In testimony whereof I have signed my name to this specification in the presence of two subscribing witnesses.

FREDERICK WILLIAM LANCHESTER.

Witnesses:
JOHN MORGAN,
HARRY DAVIS.

990

E. CHABEAULT.

TELEPHONOGRAPH.

APPLICATION FILED FEB. 10, 1913.

1,135,436.

Patented Apr. 13, 1915.

3 SHEETS—SHEET 1.

Fig. 1

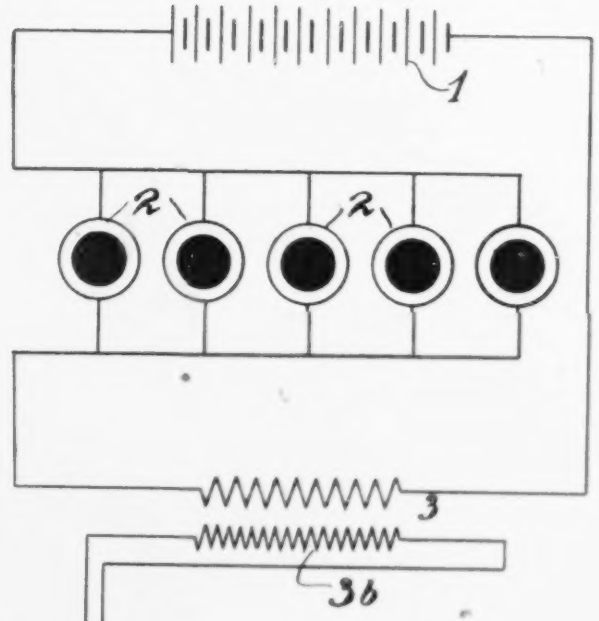

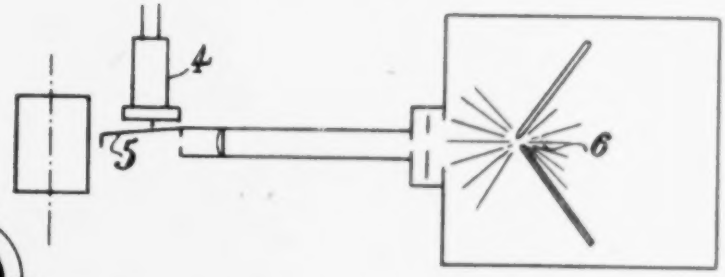

Fig. 1a

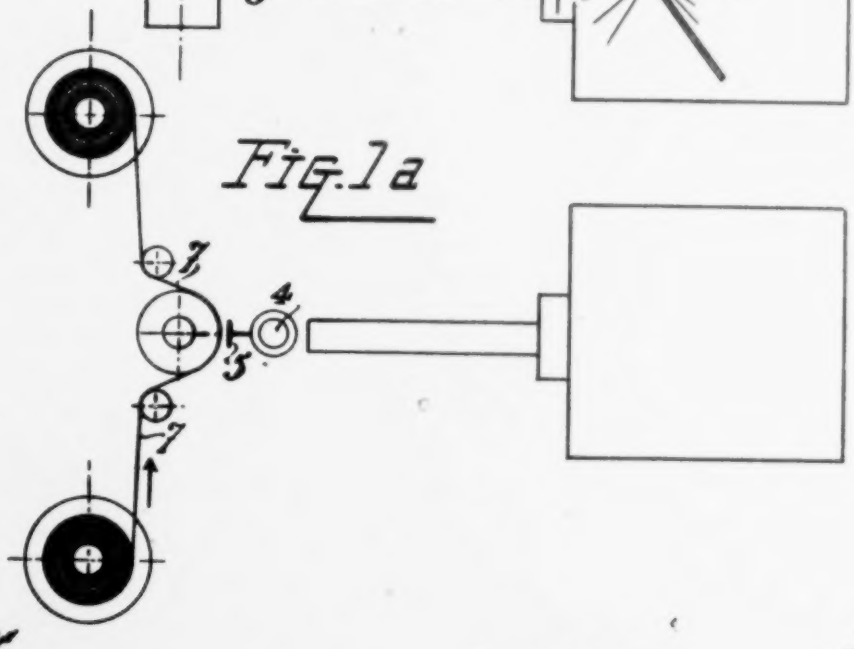

Witnesses

Inventor

Emile Chabeault

APPLICATION FILED FEB. 10, 1913.

1,135,436.

Patented Apr. 13, 1915.

3 SHEETS—SHEET 1.

Fig. 1

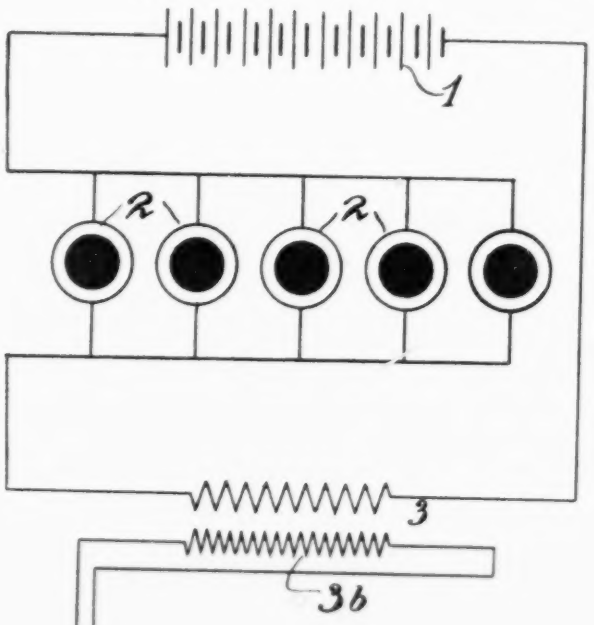

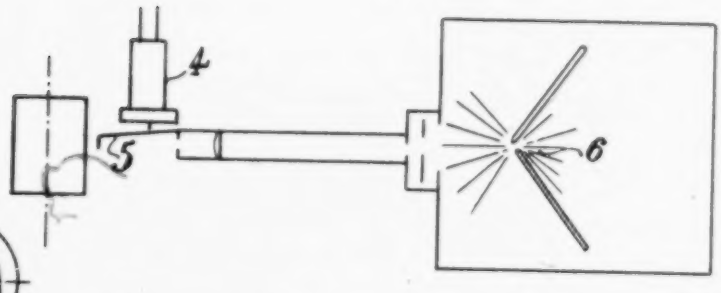

Fig. 1a

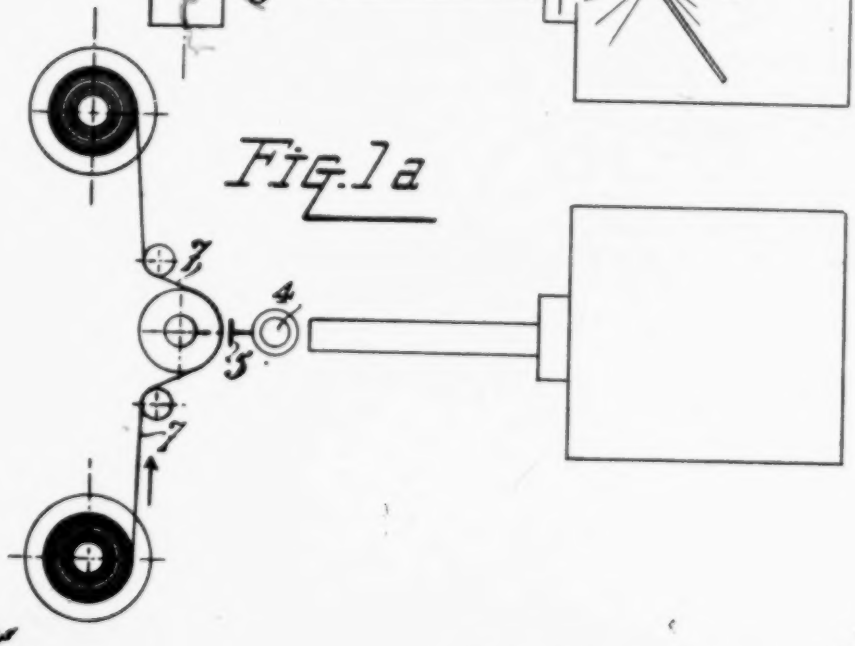

Witnesses

P. A. Putnam

L. E. Barkley

Inventor

Emile Chabeault

per Frank A. Ackerman,

Attorney

992

E. CHABEAULT.

TELEPHONOGRAPH.

APPLICATION FILED FEB. 10, 1913.

1,135,436.

Patented Apr. 13, 1915.

3 SHEETS—SHEET 2.

Fig. 2

Fig. 3

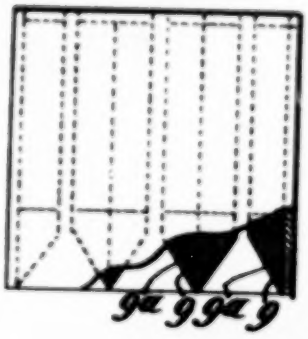

Fig. 5

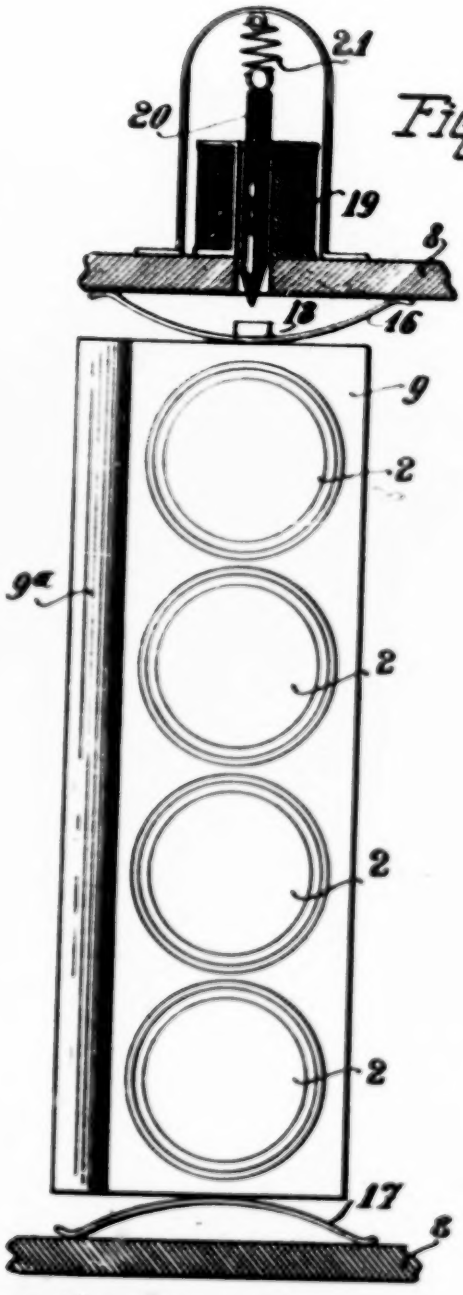

Fig. 4

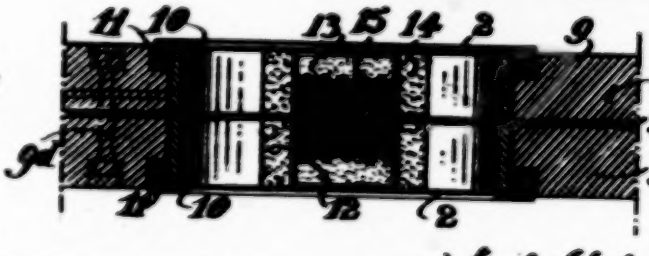

Witnesses:

Inventor

Emile Chabeault

TELEPHONOGRAPH.

APPLICATION FILED FEB. 10, 1913.

1,135,436. Patented Apr. 13, 1915.

3 SHEETS—SHEET 2.

Fig. 2

Fig. 3

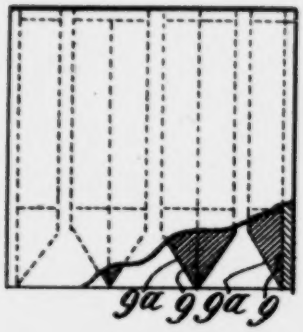

Fig. 5

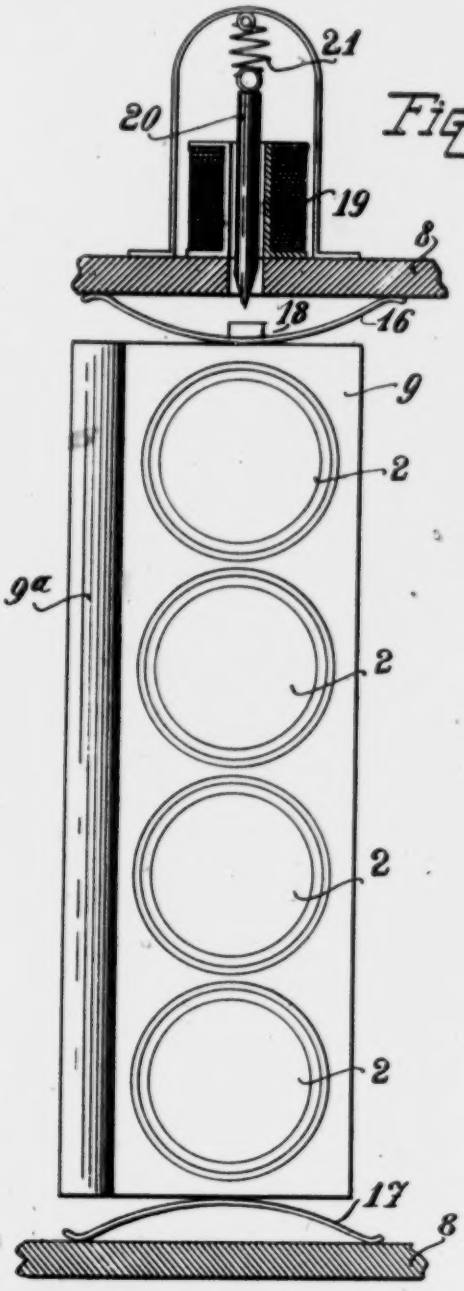

Fig. 4

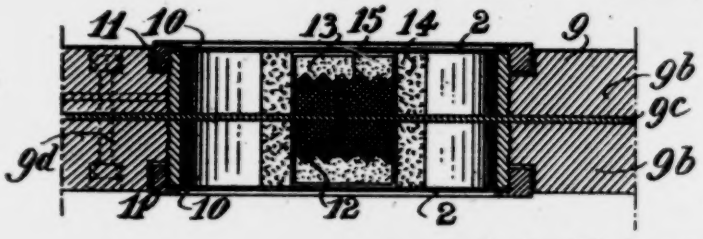

Witnesses

C. A. Putnam

L. E. Barkley

Inventor

Emile Chabeault

per Hanks. Ahlemann

Attorney

994

E. CHABEAULT.

TELEPHONOGRAPH.

APPLICATION FILED FEB. 10, 1913.

1,135,436.

Patented Apr. 13, 1915.

3 SHEETS—SHEET 3.

Fig. 6

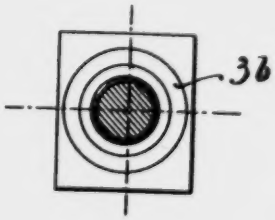

Fig. 7

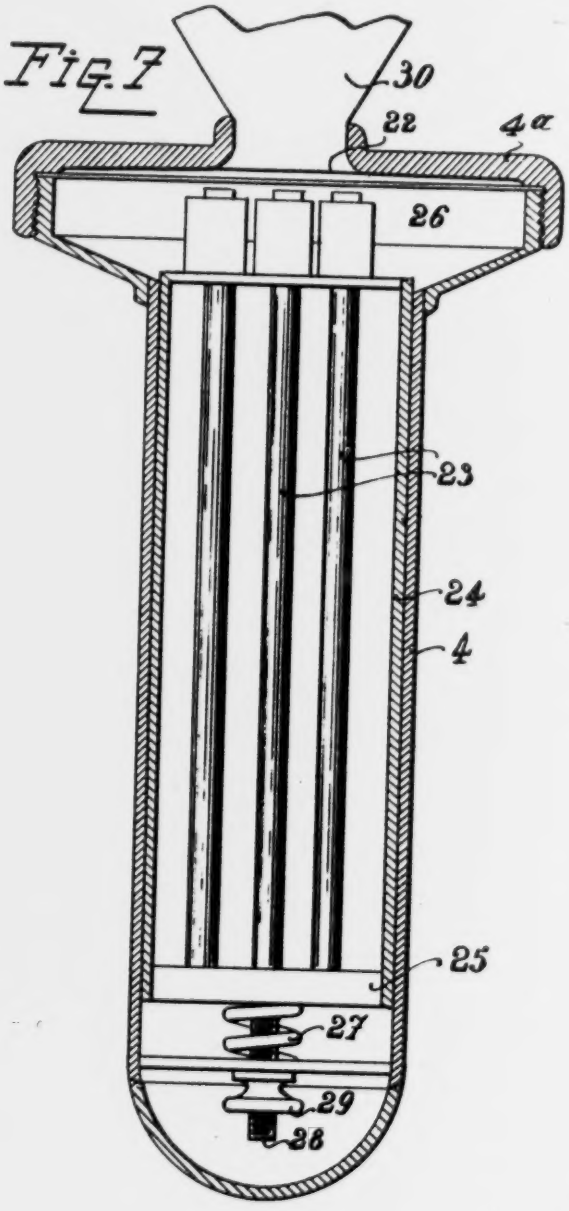

Fig. 8

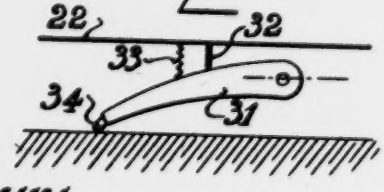

Witnesses

Fig. 9

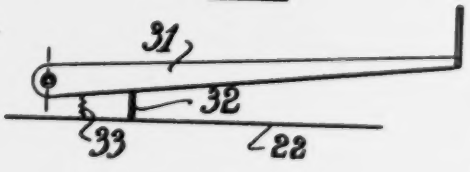

Inventor

UNITED STATES PATENT OFFICE.

EMILE CHABEAULT, OF MARSEILLE, FRANCE.

TELEPHONOGRAPH.

1,135,436. Specification of Letters Patent. Patented Apr. 13, 1915.

Application filed February 10, 1913. Serial No. 747,423.

To all whom it may concern:

Be it known that I, EMILE CHABEAULT, a citizen of the French Republic, residing at 65 Rue de l'Abbé-de-l'Epée, Marseille, Bouches-du-Rhône, France, have invented a new and useful Improved Telephonograph, of which the following is a specification.

This invention relates to an apparatus called a telephonograph, and the purpose of said apparatus is first to collect sonorous vibrations as a spy telephone would do and to obtain by a microphonic action an undulating current of as great magnitude as is desired; second to operate by this undulating current directly or through the secondary of an induction coil a receiver, the diaphragm of which under the action of these powerful vibrations is thrown into powerful mechanical movement so that the receiver acts as a loud speaking telephone and the vibrations thus obtained can be recorded.

The features of the apparatus forming the subject of the present invention comprise in the first place the combination of the different devices and means for collecting sounds (microphonic listeners) and for amplifying them and transmitting them to a special receiver acting as a loud speaking instrument. This receiver can moreover serve to record the sounds transmitted either by engraving on wax or in continuous and unlimited fashion by heliographic action. In this last method, use is made of a roll of film which by suitable treatment may furnish one or more phonographic records.

The features of the apparatus relate also to the arrangement, construction and actuation of the principal devices, such as the parts for collecting sounds (microphones or groups of microphones) indicated by the term "listener", induction coils or self-inductance coils as well as receivers (reproducers) the purpose being to proportion the magnitude of the electromagnetic masses to the increase in available energy in the undulating current.

Other devices and advantageous arrangements will be disclosed in the following description, in particular the arrangement by which several listeners can be arranged about one stage, each intended to act upon a

grammatic views showing the whole of a telephonographic installation. Figs. 2 and 3 are elevation and plan partially in section of a listener. Fig. 4 is an axial section of a double microphone. Fig. 5 is a vertical section to a larger scale of a listener, the microphone-carrying plates of which are mounted between springs. Fig. 6 is a detail of a coil. Fig. 7 is a vertical section of a reproducer. Fig. 8 shows the diaphragm of the reproducer carrying a sapphire for making a direct phonographic record. Fig. 9 shows the diaphragm of the reproducer for recording heliographically. The telephonographic apparatus of Fig. 1 comprises the devices necessary for collecting, reproducing and recording sounds. (*a*) The devices for collecting the sounds are the battery 1, the group or groups of microphones 2 and the induction coil 3. (*b*) To reproduce the sounds all that is necessary is to operate a receiver 4 by means of the microphone current, directly, or better through the medium of the induction coil secondary, this latter preferable arrangement being that shown in the drawing. (*c*) For recording all that is necessary is to cause the vibrating diaphragm of the receiver to actuate either an engraving stylus of the ordinary construction or a light screen 5 pierced with a hole to guide a ray of light from a luminous source 6 upon a sensitive roll of film 7 unrolled in front of it, the said band thus acted upon carrying a fine sinuous trace which represents the movements of the diaphragm. This film may be used to produce phonograms in the manner hereinafter explained.

The various devices which form the telephonographic apparatus have been designed to give the maximum result for the smallest volume and to give the best results from the point of view of working, and this will be described separately.

Listener.—The action of the sonorous vibrations upon the vibrating diaphragms of the microphones depends on the place occupied by the diaphragm in the train of waves. The actions upon two diaphragms arranged in a plane at right angles to the direction of propagation will be the more alike, for a given distance between the diaphragms, the farther the dia-

TELEPHONOGRAPH.
APPLICATION FILED FEB. 10, 1913.

1,135,436.

Patented Apr. 13, 1915.

3 SHEETS—SHEET 3.

Fig. 6

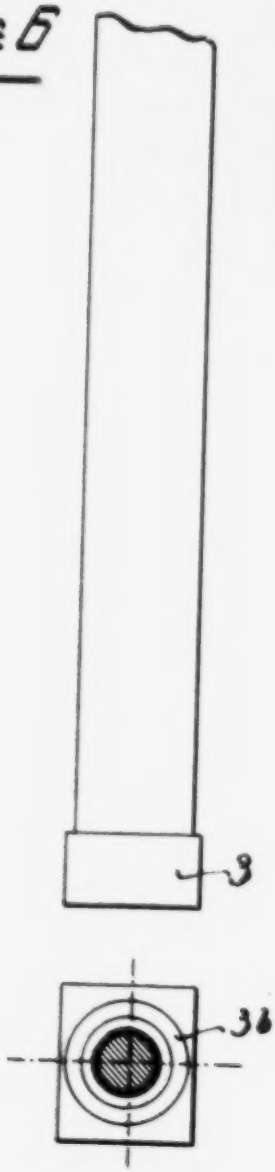

Fig. 7

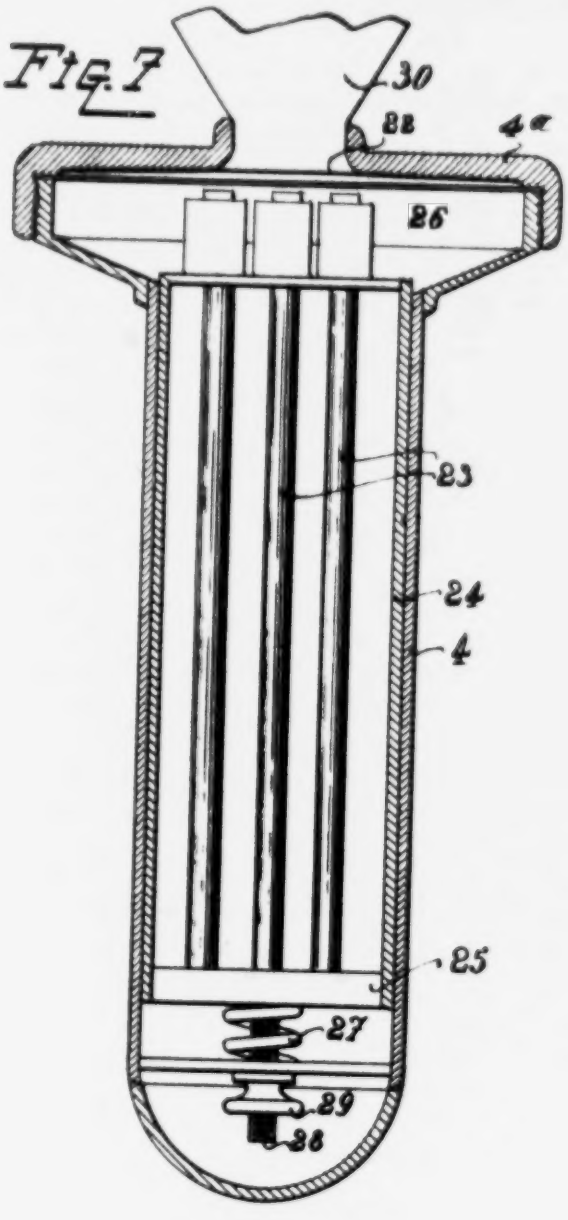

Fig. 8

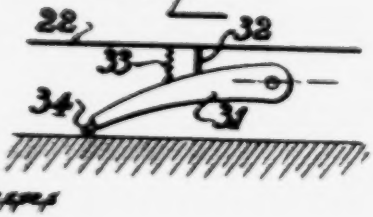

Fig. 9

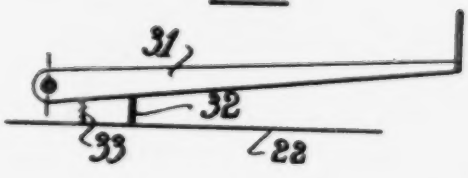

Witnesses

C. A. Putnam
L. C. Barkley

Inventor

Emile Chabeault

per Franks Ackerman,

Attorney

EMILE CHABEAULT, OF MARSEILLE, FRANCE.

TELEPHONOGRAPH.

1,135,436. Specification of Letters Patent. Patented Apr. 13, 1915.

Application filed February 10, 1913. Serial No. 747,423.

To all whom it may concern:

Be it known that I, EMILE CHABEAULT, a citizen of the French Republic, residing at 65 Rue de l'Abbé-de-l'Epée, Marseille, Bouches-du-Rhône, France, have invented a new and useful Improved Telephonograph, of which the following is a specification.

This invention relates to an apparatus called a telephonograph, and the purpose of said apparatus is first to collect sonorous vibrations as a spy telephone would do and to obtain by a microphonic action an undulating current of as great magnitude as is desired; second to operate by this undulating current directly or through the secondary of an induction coil a receiver, the diaphragm of which under the action of these powerful vibrations is thrown into powerful mechanical movement so that the receiver acts as a loud speaking telephone and the vibrations thus obtained can be recorded.

The features of the apparatus forming the subject of the present invention comprise in the first place the combination of the different devices and means for collecting sounds (microphonic listeners) and for amplifying them and transmitting them to a special receiver acting as a loud speaking instrument. This receiver can moreover serve to record the sounds transmitted either by engraving on wax or in continuous and unlimited fashion by heliographic action. In this last method, use is made of a roll of film which by suitable treatment may furnish one or more phonographic records.

The features of the apparatus relate also to the arrangement, construction and actuation of the principal devices, such as the parts for collecting sounds (microphones or groups of microphones) indicated by the term "listener", induction coils or self-inductance coils as well as receivers (reproducers) the purpose being to proportion the magnitude of the electromagnetic masses to the increase in available energy in the undulating current.

Other devices and advantageous arrangements will be disclosed in the following description, in particular the arrangement by which several listeners can be arranged about one stage, each intended to act upon a separate reproducer so as to give an audience an aural impression of the movement of the actors.

In the drawings, Figures 1 and 1ª are diagrammatic views showing the whole of a telephonographic installation. Figs. 2 and 3 are elevation and plan partially in section of a listener. Fig. 4 is an axial section of a double microphone. Fig. 5 is a vertical section to a larger scale of a listener, the microphone-carrying plates of which are mounted between springs. Fig. 6 is a detail of a coil. Fig. 7 is a vertical section of a reproducer. Fig. 8 shows the diaphragm of the reproducer carrying a sapphire for making a direct phonographic record. Fig. 9 shows the diaphragm of the reproducer for recording heliographically. The telephonographic apparatus of Fig. 1 comprises the devices necessary for collecting, reproducing and recording sounds. (*a*) The devices for collecting the sounds are the battery 1, the group or groups of microphones 2 and the induction coil 3. (*b*) To reproduce the sounds all that is necessary is to operate a receiver 4 by means of the microphone current, directly, or better through the medium of the induction coil secondary, this latter preferable arrangement being that shown in the drawing. (*c*) For recording all that is necessary is to cause the vibrating diaphragm of the receiver to actuate either an engraving stylus of the ordinary construction or a light screen 5 pierced with a hole to guide a ray of light from a luminous source 6 upon a sensitive roll of film 7 unrolled in front of it, the said band thus acted upon carrying a fine sinuous trace which represents the movements of the diaphragm. This film may be used to produce phonograms in the manner hereinafter explained.

The various devices which form the telephonographic apparatus have been designed to give the maximum result for the smallest volume and to give the best results from the point of view of working, and this will be described separately.

Listener.—The action of the sonorous vibrations upon the vibrating diaphragms of the microphones depends on the place occupied by the diaphragm in the train of waves. The actions upon two diaphragms arranged in a plane at right angles to the direction of propagation will be the more alike, for a given distance between the diaphragms, the farther the diaphragms are from the sonorous source on account of the spherical form of the waves. On the other hand it is useless to extend the microphones very far in the direction of

propagation. If the microphones are 33 cm. apart the one will be in the node of a vibration while the other will be in the loop, and therefore while one is receiving useful vibrations the other will at that instant be mute. If the microphones are 66 cm. apart both will be affected by the loops of vibrations. In this condition the vibrations acting on the microphones are not simultaneous and the two actions cannot be compounded into a single result. Therefore it is desirable to combine into as restricted a space as possible all the vibrating surfaces that it is desired to use. To satisfy this condition the listeners are formed (Figs. 2 and 3) by a wooden frame 8 within which are placed partitions 9 between which are free spaces which permit the passage of the waves. The microphones 2 are disposed along these partitions in such fashion as to occupy as large an extent of their surface as possible. The partitions 9 terminate on the side from which the sound is coming in beveled edges 9^a (Fig. 3). With the same idea in mind of arranging as many microphones as possible in a given space, the air spaces between the plates carrying the microphones are reduced say to 5 mm. and the thickness of the plates is also reduced to a minimum by the arrangement adopted for mounting the microphones. The plates are formed of three thicknesses, two equal thicknesses 9^b (Fig. 4) and a much thinner portion 9^c for example of 2 or 3 mm., all the thicknesses being of insulating material (wood fiber or molded insulating material) and connected together by bolts such as 9^d. The plates 9 are pierced with holes in which are lodged the microphones 2. A threaded ring 10 forms a sort of box upon which screws the flange 11 which serves to keep the vibrating diaphragms 2 in place.

In the middle of the space left in the interior of the ring 10 is screwed the block of carbon 12 which forms the stationary portion of the microphone cell, and around the blocks a mica cylinder 13 serves to inclose granules of carbon. An envelop of cotton wool 14 prevents the granules escaping into the box. The two blocks are connected by a threaded pin or bolt 15 so that the two opposite microphones of one strip are electrically connected in series. To complete the circuit it remains to connect alternately the rings of two consecutive microphones of one plate. The total thickness of the plate is about 25 mm. These arrangements enable the surface occupied by a given number of microphones to be considerably reduced. The plates might also carry two microphones in their depth. But the positions they would have would be disadvantageous inasmuch as it would be impossible for them

ment may be acceptable for powerful sounds. The settling of the granules leads in time to an increase of conductivity which may cause the current to become too strong, and result in heating of the cells. Moreover this settling diminishes the efficiency of the variations of resistance. For both reasons it is necessary to combat it. For this purpose the frame carrying the listener is arranged in such a way that it can be inverted. Periodic turning of it over hinders the settling of the granules becoming troublesome. If it is desired to avoid such inversion the plates 9 carrying the microphones 2 can be mounted between the two springs 16, 17 (Fig. 5), the plates carrying at the top an abutment 18 of wood or hard rubber. A solenoid 19 is arranged on the frame and its movable magnetic core 20 is suspended by a spring 21 in the line of the abutment. If a pulsating current passes through the solenoid the core is pulled down. Each time it is pulled down it strikes the abutment and gives the plate a sufficient jar to lessen or destroy the effects of settling. The microphones are all arranged in series and the variable resistance obtained is the sum of all the variable resistances of each microphone. Hence the necessity if n microphones are employed of multiplying the resistance of the coils by n.

Coils.—On the other hand as the value of the intensity varies within the same limits as for one microphone the cross section required for the coils is the same as in the case of a single microphone. This reasoning applies as well to extra-current coils as to the primary of the induction coils and to the windings of the reproducers. The extent of the winding and its volume and in consequence, its weight, require to be multiplied by the number of microphones employed. This multiplication is effected by increasing one factor of the volume or of the weight, viz. the length. The cross section of the iron and the thickness of the coil remain constant. If the length of the coil is I for one microphone, for n microphones it will be n^1 (Fig. 6). To facilitate the construction, as the length may attain a considerable value, elementary coils made for four or five microphones are grouped in series. The secondary 3^b of the induction coil 3 will occupy n times the volume of the secondary for a coil for one microphone and its resistance will be chosen with reference to the length of the line.

Reproducers.—As the undulating current obtained has a power proportioned to the number of microphones in order to utilize it to the best advantage it is necessary to construct reproducers specially for it and to increase the extent of the magnetic field

(Fig. 7). Bar magnets 23 are arranged in a bundle in a tube 24 of brass, the bars being fixed at their lower end to an iron disk 25 while the upper part of each bar carries a core of soft iron surrounded by a coil 26. Consecutive bars have poles of opposite sign. The tube 24 slips with slight friction into a cylindrical casing 4 to which is secured the box 4ª and in this is mounted the vibrating diaphragm 22; a spring 27 presses the cores toward the diaphragm and they are held back by a threaded pin 28 with a nut 29 for adjustment. The bar magnets may advantageously be replaced by electromagnets. There may be any desired number of poles but the numbers seven and nineteen seem to lend themselves best to the disposition of the coils. The poles are made opposite in sign in order to reduce the reluctance of the magnetic circuit of the reproducer. The coils are so connected as to produce opposite poles. The reproducer carries a trumpet 30 if it is intended to reproduce as a loud speaking instrument. If it is used for recording, the diaphragm 22 actuates an arm 31 (Fig. 8) through a pin 32 kept to its work by a spring 33. The arm 31 is hinged on a pointed axle on a crossbar secured to the box of the reproducer 4; at the end of the arm 31 there is a sapphire 34 for engraving on the wax (Fig. 8) or the arm may be prolonged and end in a screen 5 for recording photographically (Fig. 9).

Recorders.—The screen 5 is pierced at its center with a very small pinhole. A luminous ray passing through this hole will make an impression on the sensitized surface of a roll of film upon which it will leave a fine sinuous trace which will represent the movements of the diaphragm. As the work of engraving is obviated the line obtained will be very exact. This film 7 is unrolled at uniform speed in front of the perforated paper screen of the reproducer. When developed and fixed the film forms a block from which impressions may be made on a band of bichromated gelatin supported on a film of celluloid. This band when developed by the aid of warm water and dried will have a sinuous line in relief. If passed through a rolling mill against a sheet of lead it will give a metallic intaglio copy. The lead plate is wound helically around a drum which serves to support it. By a galvano-plastic process it is covered with a bed of nickel or copper. By this means a metallic band is obtained engraved in relief. If this metallic band is passed through a rolling mill with a band of celluloid in contact with its engraved surface it will produce a flexible copy engraved in intaglio. The rolling mill should be warmed to make this celluloid capable of receiving the imprint. The engraved band thus obtained, if unrolled uniformly, will enable a phonographic diaphragm provided with a stylus to reproduce the recorded sounds. The celluloid may be replaced by any other material which can take the membrane and remain comparatively flexible without risk of destruction.

Multiple records.—It is conceivable that several traces may be recorded simultaneously on a single roll of film by placing several reproducers side by side, each reproducer being connected to a distinct listener. It is thus possible to give an audience an aural impression of the movement of the actors. All that is necessary is to arrange the different listeners in different places on the actual stage. Taking the most simple case of two listeners, one on the right of the stage and the other on the left; the record will have two lines. When, for instance, the actors pass from right to left the right hand listeners will have a decreasing record while the left hand will increase. In the reproduction the phonographic diaphragm corresponding to the right hand line will readily reproduce this weakening of the sound, while the left hand one will reproduce the corresponding intensification recorded by the corresponding listener. The audience will thus have the impression that they would have before the stage itself, viz. of the actors moving.

What I claim is:

A listening device for telephonographic apparatus, consisting in a box open upon one side, a series of partitions arranged parallel in said box, all having one edge toward the open side of said box, spring cushions between the walls of said box and said partitions, and automatic means for setting each partition in vibration independently.

In testimony whereof I have signed my name to this specification in the presence of two subscribing witnesses.

EMILE CHABEAULT.

Witnesses:

CAZAUX,

I. MOYNOT.

propagation. If the microphones are 33 cm. apart the one will be in the node of a vibration while the other will be in the loop, and therefore while one is receiving useful vibrations the other will at that instant be mute. If the microphones are 66 cm. apart both will be affected by the loops of vibrations. In this condition the vibrations acting on the microphones are not simultaneous and the two actions cannot be compounded into a single result. Therefore it is desirable to combine into as restricted a space as possible all the vibrating surfaces that it is desired to use. To satisfy this condition the listeners are formed (Figs. 2 and 3) by a wooden frame 8 within which are placed partitions 9 between which are free spaces which permit the passage of the waves. The microphones 2 are disposed along these partitions in such fashion as to occupy as large an extent of their surface as possible. The partitions 9 terminate on the side from which the sound is coming in beveled edges 9^a (Fig. 3). With the same idea in mind of arranging as many microphones as possible in a given space, the air spaces between the plates carrying the microphones are reduced say to 5 mm. and the thickness of the plates is also reduced to a minimum by the arrangement adopted for mounting the microphones. The plates are formed of three thicknesses, two equal thicknesses 9^b (Fig. 4) and a much thinner portion 9^c for example of 2 or 3 mm., all the thicknesses being of insulating material (wood fiber or molded insulating material) and connected together by bolts such as 9^d. The plates 9 are pierced with holes in which are lodged the microphones 2. A threaded ring 10 forms a sort of box upon which screws the flange 11 which serves to keep the vibrating diaphragms 2 in place.

In the middle of the space left in the interior of the ring 10 is screwed the block of carbon 12 which forms the stationary portion of the microphone cell, and around the blocks a mica cylinder 13 serves to inclose granules of carbon. An envelop of cotton wool 14 prevents the granules escaping into the box. The two blocks are connected by a threaded pin or bolt 15 so that the two opposite microphones of one strip are electrically connected in series. To complete the circuit it remains to connect alternately the rings of two consecutive microphones of one plate. The total thickness of the plate is about 25 mm. These arrangements enable the surface occupied by a given number of microphones to be considerably reduced. The plates might also carry two microphones in their depth. But the positions they would have would be disadvantageous inasmuch as it would be impossible for them to be subject to the same effect at the same instant; in spite of this defect the arrangement may be acceptable for powerful sounds. The settling of the granules leads in time to an increase of conductivity which may cause the current to become too strong, and result in heating of the cells. Moreover this settling diminishes the efficiency of the variations of resistance. For both reasons it is necessary to combat it. For this purpose the frame carrying the listener is arranged in such a way that it can be inverted. Periodic turning of it over hinders the settling of the granules becoming troublesome. If it is desired to avoid such inversion the plates 9 carrying the microphones 2 can be mounted between the two springs 16, 17 (Fig. 5), the plates carrying at the top an abutment 18 of wood or hard rubber. A solenoid 19 is arranged on the frame and its movable magnetic core 20 is suspended by a spring 21 in the line of the abutment. If a pulsating current passes through the solenoid the core is pulled down. Each time it is pulled down it strikes the abutment and gives the plate a sufficient jar to lessen or destroy the effects of settling. The microphones are all arranged in series and the variable resistance obtained is the sum of all the variable resistances of each microphone. Hence the necessity if n microphones are employed of multiplying the resistance of the coils by n.

Coils.—On the other hand as the value of the intensity varies within the same limits as for one microphone the cross section required for the coils is the same as in the case of a single microphone. This reasoning applies as well to extra-current coils as to the primary of the induction coils and to the windings of the reproducers. The extent of the winding and its volume and in consequence, its weight, require to be multiplied by the number of microphones employed. This multiplication is effected by increasing one factor of the volume or of the weight, viz. the length. The cross section of the iron and the thickness of the coil remain constant. If the length of the coil is I for one microphone, for n microphones it will be n^1 (Fig. 6). To facilitate the construction, as the length may attain a considerable value, elementary coils made for four or five microphones are grouped in series. The secondary 3^b of the induction coil 3 will occupy n times the volume of the secondary for a coil for one microphone and its resistance will be chosen with reference to the length of the line.

Reproducers.—As the undulating current obtained has a power proportioned to the number of microphones in order to utilize it to the best advantage it is necessary to construct reproducers specially for it and to increase the extent of the magnetic field. For this purpose the number of poles acting on the vibrating diaphragm 22 is increased

(Fig. 7). Bar magnets 23 are arranged in a bundle in a tube 24 of brass, the bars being fixed at their lower end to an iron disk 25 while the upper part of each bar carries a core of soft iron surrounded by a coil 26. Consecutive bars have poles of opposite sign. The tube 24 slips with slight friction into a cylindrical casing 4 to which is secured the box 4^a and in this is mounted the vibrating diaphragm 22; a spring 27 presses the cores toward the diaphragm and they are held back by a threaded pin 28 with a nut 29 for adjustment. The bar magnets may advantageously be replaced by electromagnets. There may be any desired number of poles but the numbers seven and nineteen seem to lend themselves best to the disposition of the coils. The poles are made opposite in sign in order to reduce the reluctance of the magnetic circuit of the reproducer. The coils are so connected as to produce opposite poles. The reproducer carries a trumpet 30 if it is intended to reproduce as a loud speaking instrument. If it is used for recording, the diaphragm 22 actuates an arm 31 (Fig. 8) through a pin 32 kept to its work by a spring 33. The arm 31 is hinged on a pointed axle on a crossbar secured to the box of the reproducer 4; at the end of the arm 31 there is a sapphire 34 for engraving on the wax (Fig. 8) or the arm may be prolonged and end in a screen 5 for recording photographically (Fig. 9).

Recorders.—The screen 5 is pierced at its center with a very small pinhole. A luminous ray passing through this hole will make an impression on the sensitized surface of a roll of film upon which it will leave a fine sinuous trace which will represent the movements of the diaphragm. As the work of engraving is obviated the line obtained will be very exact. This film 7 is unrolled at uniform speed in front of the perforated paper screen of the reproducer. When developed and fixed the film forms a block from which impressions may be made on a band of bichromated gelatin supported on a film of celluloid. This band when developed by the aid of warm water and dried will have a sinuous line in relief. If passed through a rolling mill against a sheet of lead it will give a metallic intaglio copy. The lead plate is wound helically around a drum which serves to support it. By a galvano-plastic process it is covered with a bed of nickel or copper. By this means a metallic band is obtained engraved in relief. If this metallic band is passed through a rolling mill with a band of celluloid in contact with its engraved surface it will produce a flexible copy engraved in intaglio. The rolling mill should be warmed to make this celluloid capable of receiving the imprint. The engraved band thus obtained, if unrolled uniformly, will enable a phonographic diaphragm provided with a stylus to reproduce the recorded sounds. The celluloid may be replaced by any other material which can take the membrane and remain comparatively flexible without risk of destruction.

Multiple records.—It is conceivable that several traces may be recorded simultaneously on a single roll of film by placing several reproducers side by side, each reproducer being connected to a distinct listener. It is thus possible to give an audience an aural impression of the movement of the actors. All that is necessary is to arrange the different listeners in different places on the actual stage. Taking the most simple case of two listeners, one on the right of the stage and the other on the left; the record will have two lines. When, for instance, the actors pass from right to left the right hand listeners will have a decreasing record while the left hand will increase. In the reproduction the phonographic diaphragm corresponding to the right hand line will readily reproduce this weakening of the sound, while the left hand one will reproduce the corresponding intensification recorded by the corresponding listener. The audience will thus have the impression that they would have before the stage itself, viz. of the actors moving.

What I claim is:

A listening device for telephonographic apparatus, consisting in a box open upon one side, a series of partitions arranged parallel in said box, all having one edge toward the open side of said box, spring cushions between the walls of said box and said partitions, and automatic means for setting each partition in vibration independently.

In testimony whereof I have signed my name to this specification in the presence of two subscribing witnesses.

EMILE CHABEAULT.

Witnesses:
CAZAUX,
I. MOYNOT.

1000

E. H. AMET.

COMBINED PHONOGRAPHIC AND MOTION PICTURE APPARATUS FOR PRODUCING INDEXED SYNCHRONOUS RECORDS.

APPLICATION FILED DEC. 27, 1912.

1,162,433.

Patented Nov. 30, 1915.

2 SHEETS—SHEET 1.

Fig. 1.

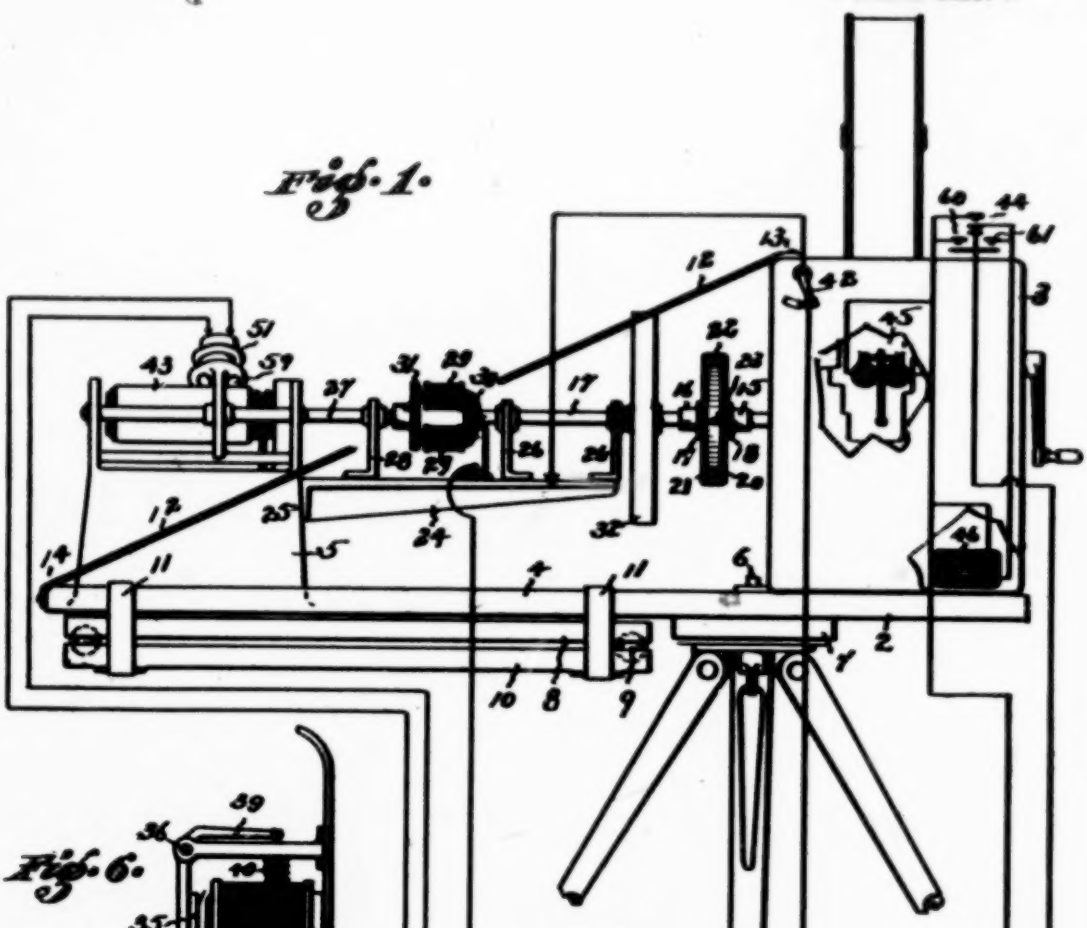

Fig. 6.

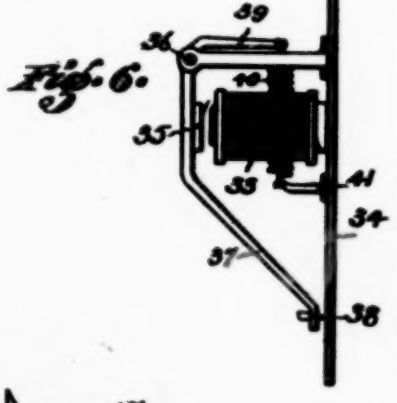

Fig. 2.

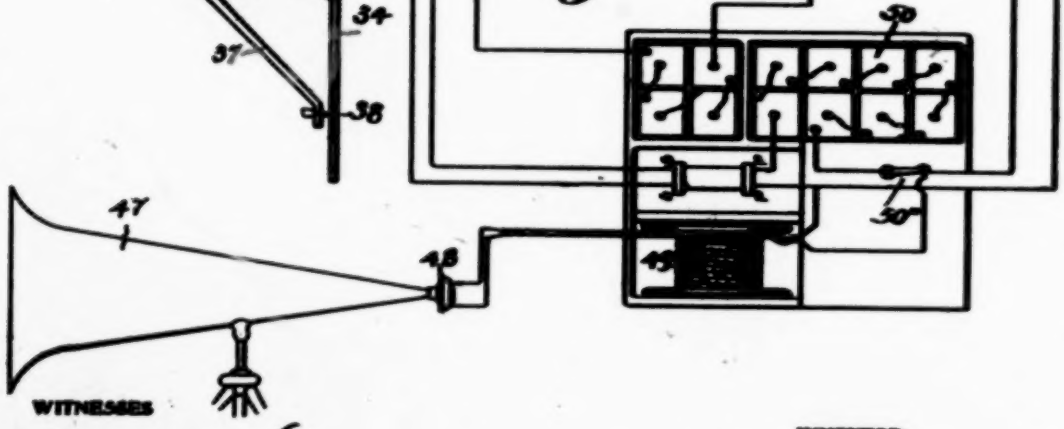

WITNESSES

Ballwin Fish

J. B. Gardner

INVENTOR

Edward H. Amet.

BY

Miller & Fish

ATTORNEYS.

1002

E. H. AMET.

COMBINED PHONOGRAPHIC AND MOTION PICTURE APPARATUS FOR PRODUCING INDEXED SYNCHRONOUS RECORDS.

APPLICATION FILED DEC. 27, 1912.

1,162,433.

Patented Nov. 30, 1915.

2 SHEETS—SHEET 2.

Fig. 3.

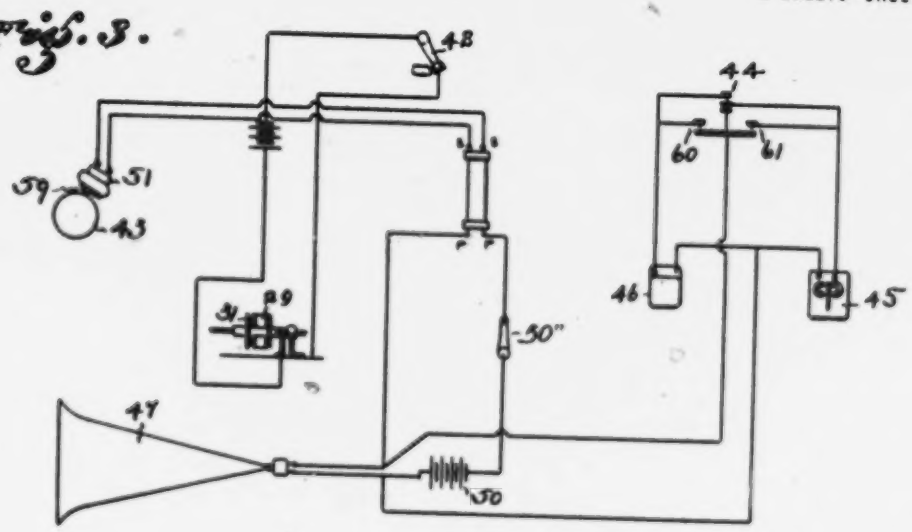

Fig. 4.

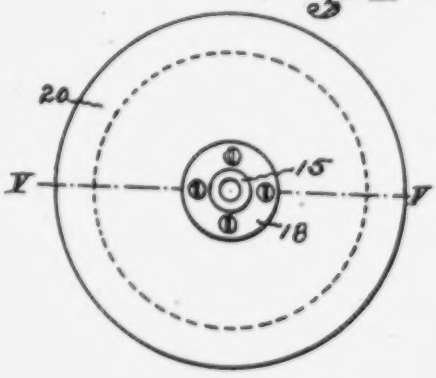

Fig. 7.

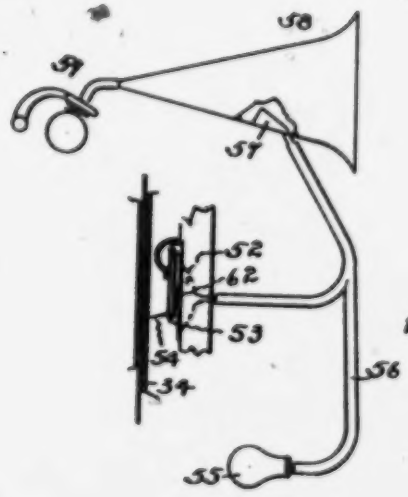

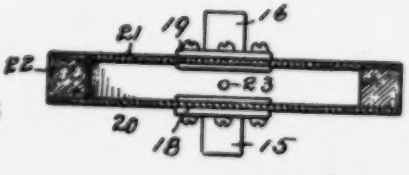

Fig. 5.

WITNESSES

INVENTOR

UNITED STATES PATENT OFFICE.

EDWARD H. AMET, OF REDONDO BEACH, CALIFORNIA.

COMBINED PHONOGRAPHIC AND MOTION-PICTURE APPARATUS FOR PRODUCING INDEXED SYNCHRONOUS RECORDS.

1,162,433. Specification of Letters Patent. Patented Nov. 30, 1915.

Application filed December 27, 1912. Serial No. 738,809.

To all whom it may concern:

Be it known that I, EDWARD H. AMET, a citizen of the United States, and a resident of Redondo Beach, in the county of Los Angeles, State of California, have invented a new and useful Combined Phonographic and Motion-Picture Apparatus for Producing Indexed Synchronous Records, of which the following is a specification.

This invention relates to the art of reproducing action in both audible and visual expressions and is applicable with apparatus of the character set forth and claimed in Letters Patent of the United States No. 1,065,576, granted to me June 24, 1913, for combination apparatus for synchronizing motion and sound reproductions, and in my co-pending application for combined phonographic and motion picture machine filed April 21, 1913, Serial No. 762,553.

An object of this invention is to provide means whereby the sound and visual action recorded by means of my said combined phonographic motion picture machine can be reproduced by means of my said combination apparatus for synchronizing motion and sound reproductions. In order to attain this object it is necessary to so mark the record devices for the records of the sound and visual action, that they can invariably be made to bring the dual records into register for synchronous reproduction in my said patented reproducing apparatus wherein the picture record device controls the operation of the sound record device by operating means located in certain relation to the visual record.

An object of this invention is to provide means whereby the dual record devices may be provided with index markings having corresponding relation to their respective records so that the synchronously produced sound and visual records may be invariably brought into register in the reproducing apparatus and so that when said operating means of the visual record device comes into operation to start the sound record device into operation, the dual records will be in such position that the synchronous parts of motion between the photographic and phonographic recording devices is established and maintained and it therefore becomes necessary to establish indexes which mark the two records simultaneously with exactness at the points of beginning. Where the picture device controls the time of starting the sound record device, it is absolutely necessary that said records be started with the places of beginning exactly coincident, otherwise the reproduction of the two records will conflict and will distress the senses of a listening observer. To avoid such conflict is a very difficult problem, and in attempting to arrive at a solution of such problem it is necessary that attention be given to the fact that marks for indexing the incipient points of picture and sound records simultaneously produced may be either arbitrarily established with some degree of coincidence or can be accurately established by the method herein shown.

An object of the invention is to accurately establish the same so that the dual reproduction will be in perfect synchronism.

I am aware that over a decade ago it was proposed that a signal such as the ringing of a bell or blowing of a whistle might be given some seconds before the commencement of a piece to mark a sound recording device, it being suggested that in reproducing the piece a picture reproducing device might be started at the exact moment for synchronous reproduction; but it is well known that up to the present time the synchronous reproduction of the sound and scene of a piece has not been accomplished in a popular manner. I apprehend that this is because of the impossibility of securing a practical synchronism by any of the proposed means, the hand of an operator being so much slower than the sight, thus preventing even a skilled operator from making a success. Furthermore the visible action of a sounding whistle or a ringing bell is seldom if ever synchronous with the sound of such bell or whistle and to secure a satisfactory synchronism of the sound and sight part of a reproduced piece such as a

E. H. AMET.

COMBINED PHONOGRAPHIC AND MOTION PICTURE APPARATUS FOR PRODUCING INDEXED SYNCHRONOUS RECORDS.

APPLICATION FILED DEC. 27, 1912.

1,162,433.

Patented Nov. 30, 1915.

2 SHEETS—SHEET 2.

Fig. 3.

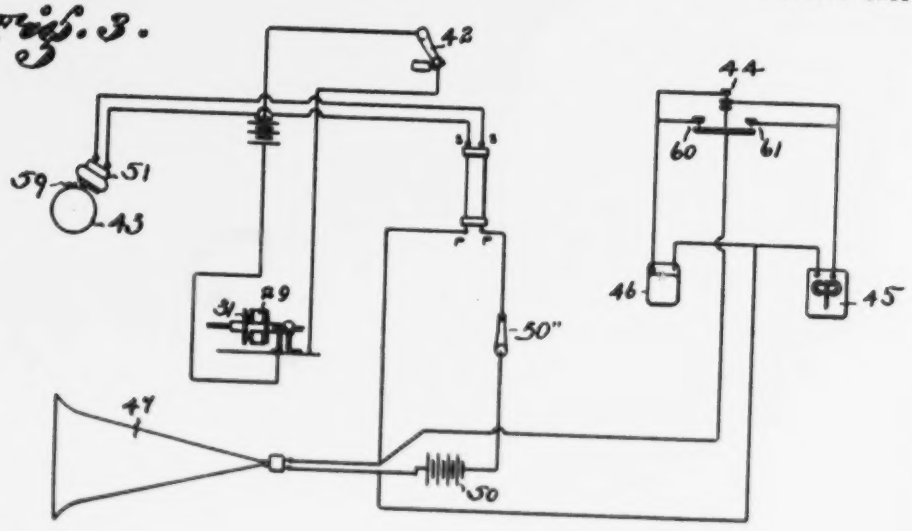

Fig. 4.

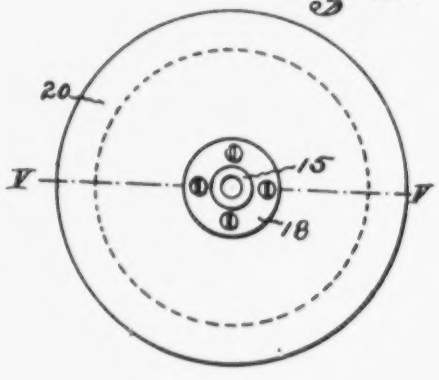

Fig. 7.

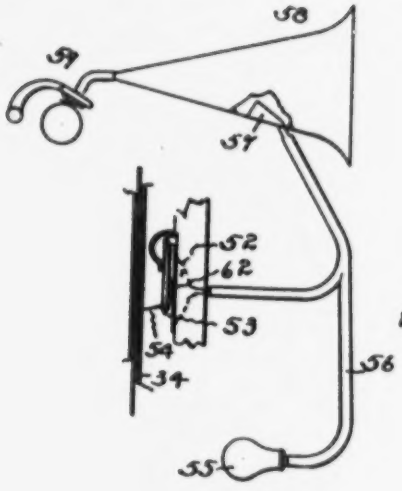

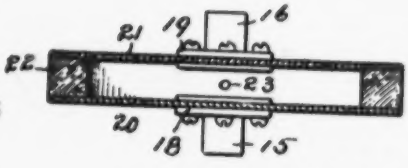

Fig. 5.

WITNESSES

Baldwin Yale

J. B. Gardner

INVENTOR

Edward H. Amet.

BY

Miller & Whitr.

ATTORNEYS.

EDWARD H. AMET, OF REDONDO BEACH, CALIFORNIA.

COMBINED PHONOGRAPHIC AND MOTION-PICTURE APPARATUS FOR PRODUCING INDEXED SYNCHRONOUS RECORDS.

1,162,433. Specification of Letters Patent. Patented Nov. 30, 1915.

Application filed December 27, 1912. Serial No. 738,809.

To all whom it may concern:

Be it known that I, EDWARD H. AMET, a citizen of the United States, and a resident of Redondo Beach, in the county of Los Angeles, State of California, have invented a new and useful Combined Phonographic and Motion-Picture Apparatus for Producing Indexed Synchronous Records, of which the following is a specification.

This invention relates to the art of reproducing action in both audible and visual expressions and is applicable with apparatus of the character set forth and claimed in Letters Patent of the United States No. 1,065,576, granted to me June 24, 1913, for combination apparatus for synchronizing motion and sound reproductions, and in my co-pending application for combined phonographic and motion picture machine filed April 21, 1913, Serial No. 762,553.

An object of this invention is to provide means whereby the sound and visual action recorded by means of my said combined phonographic motion picture machine can be reproduced by means of my said combination apparatus for synchronizing motion and sound reproductions. In order to attain this object it is necessary to so mark the record devices for the records of the sound and visual action, that they can invariably be made to bring the dual records into register for synchronous reproduction in my said patented reproducing apparatus wherein the picture record device controls the operation of the sound record device by operating means located in certain relation to the visual record.

An object of this invention is to provide means whereby the dual record devices may be provided with index markings having corresponding relation to their respective records so that the synchronously produced sound and visual records may be invariably brought into register in the reproducing apparatus and so that when said operating means of the visual record device comes into operation to start the sound record device into operation, the dual records will be in such position that the synchronous parts of the action will be synchronously reproduced throughout the subsequent simultaneous operation of the dual record devices.

By means of the apparatus shown in the said co-pending application a fixed ratio of motion between the photographic and phonographic recording devices is established and maintained and it therefore becomes necessary to establish indexes which mark the two records simultaneously with exactness at the points of beginning. Where the picture device controls the time of starting the sound record device, it is absolutely necessary that said records be started with the places of beginning exactly coincident, otherwise the reproduction of the two records will conflict and will distress the senses of a listening observer. To avoid such conflict is a very difficult problem, and in attempting to arrive at a solution of such problem it is necessary that attention be given to the fact that marks for indexing the incipient points of picture and sound records simultaneously produced may be either arbitrarily established with some degree of coincidence or can be accurately established by the method herein shown.

An object of the invention is to accurately establish the same so that the dual reproduction will be in perfect synchronism.

I am aware that over a decade ago it was proposed that a signal such as the ringing of a bell or blowing of a whistle might be given some seconds before the commencement of a piece to mark a sound recording device, it being suggested that in reproducing the piece a picture reproducing device might be started at the exact moment for synchronous reproduction; but it is well known that up to the present time the synchronous reproduction of the sound and scene of a piece has not been accomplished in a popular manner. I apprehend that this is because of the impossibility of securing a practical synchronism by any of the proposed means, the hand of an operator being so much slower than the sight, thus preventing even a skilled operator from making a success. Furthermore the visible action of a sounding whistle or a ringing bell is seldom if ever synchronous with the sound of such bell or whistle and to secure a satisfactory synchronism of the sound and sight part of a reproduced piece such as a play or opera has never yet been accomplished to the satisfaction of a public audience. I have overcome this difficulty by the very simple invention herein amplified and described and which consists essentially in

providing, in combination with a combined phonographic and motion picture machine having means for producing photographic and auditory records in unison, means for marking the photographic record, means for marking the auditory record, and means for simultaneously operating said record means, so that while the two record devices are in operation both may be marked at the same instant and then by continuing to operate the two record-making machines synchronously, either will receive its record in exact time; and it is always possible thereafter to start in true register with each other, the records as synchronously produced after such marking; it only being necessary to bring into operative position the corresponding signal marks and start the two machines.

In my said combined machine shown in said co-pending application there was no means whereby exact synchronism could be secured in said reproducing apparatus between the motion of the auditory and visual records, nor has there heretofore been any means whereby it was possible to start said records in a reproducing apparatus with the exactitude necessary for producing an actual synchronous reproduction of the naturally connected auditory and visual performance.

It is understood and practically demonstrated that the lapse of time between the reception of the visual and auditory impressions upon the sensory nerves and the voluntary operation of mechanism by the hand of the person receiving such sensations is so great as to produce a discordant effect by reason of a hiatus or lapse between the production of a motion picture action and a sound record action where the starting of the sound record for the purpose of synchronizing with the motion picture has been effected through the medium of an attendant observing the picture and operating the starting mechanism for the sound record.

It is necessary for satisfactory synchronism of the reproduction of the two records that apparatus such as described in my co-pending application be started by means superior to any that have heretofore been known, otherwise the reproduction will be unsatisfactory except by accident or exceeding skill upon the part of the operator.

An object of this invention is to make provision whereby the records can be invariably synchronized with absolute accuracy at the beginning or at any part of the motion picture action where it is desired to introduce the sound action. This I have accomplished by providing a combined phonographic and with both said marking means to simultaneously operate the same, and I regard the invention as basic and pioneer in that I provide connected mechanical markers for simultaneously establishing an index marking on a photographic and also on a phonographic record device; there being means for moving said record device at the time of such marking whereby the index markings are placed at the inceptive points of dual operation of said devices to establish perfect registry of the records for reproduction in unison. The index markers should produce upon the picture record device and upon the auditory record device, record index marks of like length for the reason that the beginning of one signal before the other, or the continuation of one signal after the other had ceased would leave the operator without any exact index of the points that are to register with each other. By my invention the index marks on both record devices are made of equal duration as will be fully understood from the subjoined description and the accompanying drawings.

Other objects will be disclosed as the description progresses.

The invention possesses advantageous features that, with the foregoing, will be set forth at length in the following description, where I shall outline in full that form of invention selected for illustration in the drawings accompanying and forming part of the present specification.

The novelty of the invention will be included in the claims succeeding said description. From this it will be apparent that I do not restrict myself to the showing made by said drawings and description as I may adopt many variations within the scope of my invention as expressed in said claims.

The interval of variation permissible in the register of the parallel records of the respective machines reduces the production and reproduction of successful dual records to a matter of the finest adjustments of speed and register.

An object of this invention is to secure perfect register between the two records for simultaneous reproduction.

To insure definite uniformity in the speed of the respective machines, the most practical method, as set forth in said copending application is to mount the phonograph record mandrel on an integral extension of the drive shaft of the motion picture camera.

For ease in elucidation, it is well to fix in the mind that in the present instance both the visual and the auditory records are linear. The photographic or visual is a suc-

a uniform speed, each record distinct and independent of the other in its inherent qualities, but interdependent for the desired compound result.

There are periods in most performances (that might be the subject of the recording machines) wherein the action will proceed in silence. For instance, the placing of a blast would be interesting visually and have no auditory interest until the moment of explosion and then the sounds of the explosion should be reproduced until its echoes die away. Therefore, it is necessary to introduce means for simultaneously and definitely index marking the inceptive points where it is desired that the plural records begin to coöperate. Because of its flexibility in transmission, and instantaneous action, and for other important reasons, the marking of the several records is preferably accomplished electrically.

In the drawings: Figure 1 is a side elevation of a combined machine constructed in accordance with this invention. Fig. 2 is a plan view from above of the battery box holding the portable source of electric energy for operating the various circuits illustrated in Fig. 1 and is to be read in connection with that figure. A microphone transmitter is also shown in the same circuit with the film marker and phonographic record marker, which latter comprises a telephone receiver and an auditory signal device to intermittently actuate said receiver. Fig. 3 is a wiring diagram illustrating the electrical means for marking or indexing the independent records. Fig. 4 is an end elevation of the sound absorbing universal joint interposed between the contiguous ends of the shafts of the camera and phonograph. Fig. 5 is a plan view of the same in cross section taken on the line V—V. Fig. 6 is a full-sized detail in side elevation of the magnetic film marker for marking the photographic record or negative. Fig. 7 is a diagrammatic plan of the alternate pneumatic means for simultaneously marking the companion records.

In the combined phonographic and motion picture machine, any suitable means for producing photographic and auditory records in unison may be employed; and in combination with such means, I provide in the present instance means for marking the photographic record device, means interdependent therewith for marking the auditory record device, and means under control of the operator for simultaneously operating said record device marking means, as will and its companion sound record device can be brought into perfect registry in the reproducing machine. These index markers are of use in machines of mathematical precision to synchronously operate the auditory and visual records, an object being to have the initially moving record to control the starting of the record to be synchronized therewith.

In detail the construction consists of the usual motion picture tripod 1, of the portable outfit for making motion picture records, or any suitable table or foundation in the fixed or reproducing outfit. The base consists of a platform 2 to receive the camera 3, and having the side extensions 4 forming a hollow frame in which the phonograph 5 provided with recording mechanism is hung. This base is revoluble on the horizontal plane around the vertical pivotal pin 6, fixed on the tripod head 7. The phonograph is fixed to the base board 8 resting upon the resilient balls 9, extending into hemispherical sockets at the four corners in the base board. These balls are also confined within similar sockets formed in the sub-base 10 that is hung in the hollow frame by the supporting brackets 11, fixed to the side bars 4. The frame is steadied by the straps 12, extending from the top of the camera at 13 to the ends of the frame at 14 on both sides. All extraneous vibrations that might reach the phonograph through the base are absorbed by the hollow rubber balls 9. This peculiar construction of vibration absorbing mounting will be claimed in a separate application for patent. The extension sleeve couplings 15 and 16 are respectively fixed to the ends of the drive shaft of the camera and the intermediate shaft 17. These sleeves are provided with the flanges 18 and 19 that are fixed together by being fixed (preferably by adhesion) to the annular wooden or fiber ring 22. This drum-like structure is vented through the hole 23 to relieve any concussion due to end thrust from either of the joined shafts, or the heads may be open in spider-like construction. The heads 20 and 21 are preferably of oil-impregnated flexible leather, or sheet rubber, having sufficient tensile strength to transmit the power necessary for rotation without buckling or distortion. Having no sound-conducting properties, the heads 20 and 21 isolate the respective machines and break up any sound vibrations in the respective drive shafts. The flexibility of this novel coupling also compensates for

having means for producing photographic and auditory records in unison, means for marking the photographic record, means for marking the auditory record, and means for simultaneously operating said record means, so that while the two record devices are in operation both may be marked at the same instant and then by continuing to operate the two record-making machines synchronously, either will receive its record in exact time; and it is always possible thereafter to start in true register with each other, the records as synchronously produced after such marking; it only being necessary to bring into operative position the corresponding signal marks and start the two machines.

In my said combined machine shown in said co-pending application there was no means whereby exact synchronism could be secured in said reproducing apparatus between the motion of the auditory and visual records, nor has there heretofore been any means whereby it was possible to start said records in a reproducing apparatus with the exactitude necessary for producing an actual synchronous reproduction of the naturally connected auditory and visual performance.

It is understood and practically demonstrated that the lapse of time between the reception of the visual and auditory impressions upon the sensory nerves and the voluntary operation of mechanism by the hand of the person receiving such sensations is so great as to produce a discordant effect by reason of a hiatus or lapse between the production of a motion picture action and a sound record action where the starting of the sound record for the purpose of synchronizing with the motion picture has been effected through the medium of an attendant observing the picture and operating the starting mechanism for the sound record.

It is necessary for satisfactory synchronism of the reproduction of the two records that apparatus such as described in my co-pending application be started by means superior to any that have heretofore been known, otherwise the reproduction will be unsatisfactory except by accident or exceeding skill upon the part of the operator.

An object of this invention is to make provision whereby the records can be invariably synchronized with absolute accuracy at the beginning or at any part of the motion picture action where it is desired to introduce the sound action. This I have accomplished by providing a combined phonographic and motion picture machine having means for producing photographic and auditory records in unison, means for marking the photographic record, means for marking the auditory record, and mechanism connected ously operate the same, and I regard the invention as basic and pioneer in that I provide connected mechanical markers for simultaneously establishing an index marking on a photographic and also on a phonographic record device; there being means for moving said record device at the time of such marking whereby the index markings are placed at the inceptive points of dual operation of said devices to establish perfect registry of the records for reproduction in unison. The index markers should produce upon the picture record device and upon the auditory record device, record index marks of like length for the reason that the beginning of one signal before the other, or the continuation of one signal after the other had ceased would leave the operator without any exact index of the points that are to register with each other. By my invention the index marks on both record devices are made of equal duration as will be fully understood from the subjoined description and the accompanying drawings.

Other objects will be disclosed as the description progresses.

The invention possesses advantageous features that, with the foregoing, will be set forth at length in the following description, where I shall outline in full that form of invention selected for illustration in the drawings accompanying and forming part of the present specification.

The novelty of the invention will be included in the claims succeeding said description. From this it will be apparent that I do not restrict myself to the showing made by said drawings and description as I may adopt many variations within the scope of my invention as expressed in said claims.

The interval of variation permissible in the register of the parallel records of the respective machines reduces the production and reproduction of successful dual records to a matter of the finest adjustments of speed and register.

An object of this invention is to secure perfect register between the two records for simultaneous reproduction.

To insure definite uniformity in the speed of the respective machines, the most practical method, as set forth in said copending application is to mount the phonograph record mandrel on an integral extension of the drive shaft of the motion picture camera.

For ease in elucidation, it is well to fix in the mind that in the present instance both the visual and the auditory records are linear. The photographic or visual is a succession of pictures. The phonographic or auditory is an indented line on a cylinder, tape or disk, or it may be a Paulsen magnetic record on a steel wire. This gives two or more parallel records moving forward at

independent of the other in its inherent qualities, but interdependent for the desired compound result.

There are periods in most performances (that might be the subject of the recording machines) wherein the action will proceed in silence. For instance, the placing of a blast would be interesting visually and have no auditory interest until the moment of explosion and then the sounds of the explosion should be reproduced until its echoes die away. Therefore, it is necessary to introduce means for simultaneously and definitely index marking the inceptive points where it is desired that the plural records begin to coöperate. Because of its flexibility in transmission, and instantaneous action, and for other important reasons, the marking of the several records is preferably accomplished electrically.

In the drawings: Figure 1 is a side elevation of a combined machine constructed in accordance with this invention. Fig. 2 is a plan view from above of the battery box holding the portable source of electric energy for operating the various circuits illustrated in Fig. 1 and is to be read in connection with that figure. A microphone transmitter is also shown in the same circuit with the film marker and phonographic record marker, which latter comprises a telephone receiver and an auditory signal device to intermittently actuate said receiver. Fig. 3 is a wiring diagram illustrating the electrical means for marking or indexing the independent records. Fig. 4 is an end elevation of the sound absorbing universal joint interposed between the contiguous ends of the shafts of the camera and phonograph. Fig. 5 is a plan view of the same in cross section taken on the line V—V. Fig. 6 is a full-sized detail in side elevation of the magnetic film marker for marking the photographic record or negative. Fig. 7 is a diagrammatic plan of the alternate pneumatic means for simultaneously marking the companion records.

In the combined phonographic and motion picture machine, any suitable means for producing photographic and auditory records in unison may be employed; and in combination with such means, I provide in the present instance means for marking the photographic record device, means interdependent therewith for marking the auditory record device, and means under control of the operator for simultaneously operating said record device marking means, as will now be fully disclosed, so that the index marks established upon the photographic negative and upon the master sound record may be reproduced respectively upon the positive film and the companion sound record device in such a manner that said film be brought into perfect registry in the reproducing machine. These index markers are of use in machines of mathematical precision to synchronously operate the auditory and visual records, an object being to have the initially moving record to control the starting of the record to be synchronized therewith.

In detail the construction consists of the usual motion picture tripod 1, of the portable outfit for making motion picture records, or any suitable table or foundation in the fixed or reproducing outfit. The base consists of a platform 2 to receive the camera 3, and having the side extensions 4 forming a hollow frame in which the phonograph 5 provided with recording mechanism is hung. This base is revoluble on the horizontal plane around the vertical pivotal pin 6, fixed on the tripod head 7. The phonograph is fixed to the base board 8 resting upon the resilient balls 9, extending into hemispherical sockets at the four corners in the base board. These balls are also confined within similar sockets formed in the sub-base 10 that is hung in the hollow frame by the supporting brackets 11, fixed to the side bars 4. The frame is steadied by the straps 12, extending from the top of the camera at 13 to the ends of the frame at 14 on both sides. All extraneous vibrations that might reach the phonograph through the base are absorbed by the hollow rubber balls 9. This peculiar construction of vibration absorbing mounting will be claimed in a separate application for patent. The extension sleeve couplings 15 and 16 are respectively fixed to the ends of the drive shaft of the camera and the intermediate shaft 17. These sleeves are provided with the flanges 18 and 19 that are fixed to the heads 20 and 21 that are joined together by being fixed (preferably by adhesion) to the annular wooden or fiber ring 22. This drum-like structure is vented through the hole 23 to relieve any concussion due to end thrust from either of the joined shafts, or the heads may be open in spider-like construction. The heads 20 and 21 are preferably of oil-impregnated flexible leather, or sheet rubber, having sufficient tensile strength to transmit the power necessary for rotation without buckling or distortion. Having no sound-conducting properties, the heads 20 and 21 isolate the respective machines and break up any sound vibrations in the respective drive shafts. The flexibility of this novel coupling also compensates for any disalinement of the joined shafts and acts as a "universal joint." The extension arm 24 is attached to the side of the phonograph at 25. The pillar bearings 26 attached to this arm act as mountings for the shaft 17. This shaft is fixed in axial aline-

ment with the mandrel shaft extension 27 of the phonograph, journaled in the outbearing 28 mounted on the arm 24.

The magnetic clutch comprises the magnets 29—29 fixed upon the core bar 30, that is fixed upon the end of the shaft 17 and the armature disk 31 that is slidably splined on the end of the extension shaft 27. It is the function of this clutch to instantly and positively set, to start the phonograph mandrel rotating at full speed when the clutch circuit is closed, as hereinafter described. The shaft 17 rotates constant with the camera shaft. The relative heavy fly wheel 32 fixed upon the shaft 17 has more than sufficient stored momentum at all times to overcome the inertia of the phonograph mechanism, to instantly start the same at full speed when the magnetic clutch locks. For the sake of effect, it is sometimes desirable that the phonograph be operated only when the exigencies of the subject of the record call for it. Hence necessity for starting the sound record at various times during the production may arise. Said starting must be such that absolute unison in the making of the companion records being taken is secured, whereby in their subsequent reproduction the absolute unison of the selected portions of the phonographic records can be interjected in perfect register with the contemporaneous portions of the photographic record.

The motion picture camera is conventional in general construction. The electro-magnetic film marker consists of the magnetic coils 33 preferably fixed upon the plate 34 hinged to the frame of the drive mechanism. This plate is the swinging cover for the film guide and exposure opening. The armature 35 of the coils is pivoted at 36 and provided with the downward extension arm 37 provided with a marking point 38 extended through a perforation in said cover plate. The upper end of this arm is bent at a right angle 39 on the opposite side of the pivot and is provided with a tension spring 40 with its opposite end attached to the bracket 41 fixed to the cover plate. The function of this spring is to keep the marking point out of contact with the film when the magnet is inoperative. When the magnet is energized as hereinafter described, the marking point is held in contact with the traveling film, in which it makes a visible score line. By closing the switch 42 of the magnetic clutch circuit, the phonographic record device 43 is made to rotate in unison with the drive shaft of the motion picture machine or camera ready to receive both the index marks and the sound record from the telesignal device, as the buzzer 46, constituting an electro-vibrant auditory record marker that is also in circuit with the phonographic recording mechanism 59 for operating said telephone receiver at the will of the operator to make the auditory index marks on the record device 43. By this means an auditory mark may be made on the phonographic record device 43 through the medium of the telephone receiver 51, which forms a part of said recording mechanism, at the same instant that the film is marked by the photographic record marker.

The switch mechanism shown at 44, 60 and 61, in Fig. 3, is designed for simultaneous and alternative operation of the markers or indexing devices 45 and 46. To mark the records simultaneously, the switch 44 alone is closed, or in lieu thereof the switches 60 and 61 may be simultaneously closed; thus simultaneously energizing the electro-magnets of said markers and thereby operating the markers. To mark the records alternatively or independently of each other, the switch 44 being open, either of the switches 60 or 61 may be closed as required for the desired marking.

For taking sound records at a distance not possible with the ordinary phonographic recorder, the receiving horn 47 is provided with a telephonic transmitter 48 attached to a flexible cable 49, and wired in the usual way through a battery 50, an induction coil and a telephonic receiver 51 in operative relation with the recording mechanism of the phonograph. The switch 62 in the battery circuit is provided to switch off the battery when it is not in use.

The above description discloses the mechanical elements of a combined machine for simultaneously taking photographic and phonographic records in unison. The following description will disclose the electrical, mechanical and manual control of the various elements recited. By sound part is meant the parts of the performance which are addressed to the auditory senses.

In many cases such as operatic performances where it is desired that the action and sound accompaniment shall be continuous throughout the entire performance, the switch 44 will be momentarily closed by the operator before the performance begins, thus establishing on both record devices an index-marking by which the registry of the two records may be set for reproduction. After this initial indexing further indexing can be accomplished in like manner or by closing the switch 60, at any part of the production at which it is desired to introduce or omit the sound part.

tance or other circumstances make it inadvisable to attempt sound recording. A silent picture of the approaching vessel is taken until such time as salutes or other sounds are produced, of which a companion sound record is desired. During the interval in which the camera was taking a silent motion photographic record, the phonograph remains inoperative. The instant the operator closes the switch 42 on the camera, that closes the clutch circuit, the energized magnets of the clutch attract the armature 31 and cause the mandrel of the phonograph carrying the wax record 43 to rotate. The operator then closes the switch 44 that closes the proper circuit to energize the dual marking devices 45 and 46. This action causes the film marker to score the film and the phonograph record marker to mark the sound record; thus establishing an initial, inseptive index point at which the dual companion records register. After the dual records have been made as above described, they are prepared for reproduction as follows: The photographic record is developed and processed to produce a photographic negative. Positives are printed from this negative. Each positive print discloses the index marks made on the negative by the film marker. These marks can be modified in any desirable manner to conform to the type of machine by which they are to be projected. The most desirable method is to perforate the record at or near the mark and use this perforation as a port in a pneumatic device adapted to operate a switch controlling the electro-magnetic clutch to start the phonographic record as set forth in my United States Patent, No. 1,065,576, June 24, 1913. Electric contact may be made through this port by contacts on opposite sides of the film to operate the starting clutch. Various means of utilizing the film marks are sufficiently obvious. The audible mark made on the phonographic record will manifest itself when the reproducing stylus reaches it. The vital requirement is that the inceptive points of the first co-action of the two records be absolutely in unison in the subsequent reproductions. For the perfect results that can be attained with the records marked by my present invention more than mere synchronism is possible. The register of the inceptive points can be reduced to an infinitesimal unit of time, and a register maintained throughout the performance.

The alternative pneumatic system of operating the record markers consists of the closed box 52 having the flexible diaphragm 53. This box is mounted on the cover 34, the marking point into contact with the record film. The audible signal for the auditory record consists of a reed signal 57 connected to the bulb by the tubing 56 and located in the auditory horn. The back pressure in the tubing due to the fluttering of the reed is sufficient to cause the necessary distention of the diaphragm 53. The horn, 58 may be attached directly to the sound recording mechanism 59 of the phonograph. The pressure of the bulb 55 causes a visible mark on the photographic record, and an audible disturbance that makes its mark on the auditory phonographic record.

For simplicity in description the simultaneous index marking of two records only has been described. It is obvious that a multiplicity of consistent records might be so made and suitably marked. For instance, a phonographic, a photographic, an automatic piano record and a modified record for controlling variations in the lighting of the subject, etc. Such combinations are now contemplated by me, and I do not wish to be confined to the simplified disclosures herein in the interpretation of the scope of my invention.

The form of machine shown in Figs. 1 and 3 is adapted for both simultaneous and alternative marking. For simultaneous marking the button 44 is pressed, and for alternatively or independently indexing the several records the separate button switches 60 and 61, respectively controlling the film marker circuit and the audible record marker may be alternatively pressed. These divisional circuits can be multiplied as often as the number of independent records demand. Each switch can operate through a bus bar with a proper means for operating all switches simultaneously, should circumstances require.

The buzzer 46 when in action is included in the primary circuit of the induction coil and opens and closes the circuit as it vibrates. These vibrations act upon the magnets of the telephone receiver in the secondary circuit causing the telephone receiver diaphragm to vibrate in synchronism with the vibrations of the buzzer. The vibrations of the telephone receiver diaphragm act indirectly upon the recording means of the talking machine through the medium of air wave impulses and not by direct mechanical connection.

I claim:

1. Means for marking photographic and auditory records produced in unison, including an electric circuit; an electro-magnetic film marker, an electro-vibrant auditory record marker and a switch in said circuit

bearing 28 mounted on the arm 24.

The magnetic clutch comprises the magnets 29—29 fixed upon the core bar 30, that is fixed upon the end of the shaft 17 and the armature disk 31 that is slidably splined on the end of the extension shaft 27. It is the function of this clutch to instantly and positively set, to start the phonograph mandrel rotating at full speed when the clutch circuit is closed, as hereinafter described. The shaft 17 rotates constant with the camera shaft. The relative heavy fly wheel 32 fixed upon the shaft 17 has more than sufficient stored momentum at all times to overcome the inertia of the phonograph mechanism, to instantly start the same at full speed when the magnetic clutch locks. For the sake of effect, it is sometimes desirable that the phonograph be operated only when the exigencies of the subject of the record call for it. Hence necessity for starting the sound record at various times during the production may arise. Said starting must be such that absolute unison in the making of the companion records being taken is secured, whereby in their subsequent reproduction the absolute unison of the selected portions of the phonographic records can be interjected in perfect register with the contemporaneous portions of the photographic record.

The motion picture camera is conventional in general construction. The electro-magnetic film marker consists of the magnetic coils 33 preferably fixed upon the plate 34 hinged to the frame of the drive mechanism. This plate is the swinging cover for the film guide and exposure opening. The armature 35 of the coils is pivoted at 36 and provided with the downward extension arm 37 provided with a marking point 38 extended through a perforation in said cover plate. The upper end of this arm is bent at a right angle 39 on the opposite side of the pivot and is provided with a tension spring 40 with its opposite end attached to the bracket 41 fixed to the cover plate. The function of this spring is to keep the marking point out of contact with the film when the magnet is inoperative. When the magnet is energized as hereinafter described, the marking point is held in contact with the traveling film, in which it makes a visible score line. By closing the switch 42 of the magnetic clutch circuit, the phonographic record device 43 is made to rotate in unison with the drive shaft of the motion picture machine or camera ready to receive both the index marks and the sound record from the telephone receiver 51.

In a split circuit with the photographic record marker 45, there is provided a sound record marker in the form of an auditory electro-vibrant auditory record marker that is also in circuit with the phonographic recording mechanism 39 for operating said telephone receiver at the will of the operator to make the auditory index marks on the record device 43. By this means an auditory mark may be made on the phonographic record device 43 through the medium of the telephone receiver 51, which forms a part of said recording mechanism, at the same instant that the film is marked by the photographic record marker.

The switch mechanism shown at 44, 60 and 61, in Fig. 3, is designed for simultaneous and alternative operation of the markers or indexing devices 45 and 46. To mark the records simultaneously, the switch 44 alone is closed, or in lieu thereof the switches 60 and 61 may be simultaneously closed: thus simultaneously energizing the electro-magnets of said markers and thereby operating the markers. To mark the records alternatively or independently of each other, the switch 44 being open, either of the switches 60 or 61 may be closed as required for the desired marking.

For taking sound records at a distance not possible with the ordinary phonographic recorder, the receiving horn 47 is provided with a telephonic transmitter 48 attached to a flexible cable 49, and wired in the usual way through a battery 50, an induction coil and a telephonic receiver 51 in operative relation with the recording mechanism of the phonograph. The switch 62 in the battery circuit is provided to switch off the battery when it is not in use.

The above description discloses the mechanical elements of a combined machine for simultaneously taking photographic and phonographic records in unison. The following description will disclose the electrical, mechanical and manual control of the various elements recited. By sound part is meant the parts of the performance which are addressed to the auditory senses.

In many cases such as operatic performances where it is desired that the action and sound accompaniment shall be continuous throughout the entire performance, the switch 44 will be momentarily closed by the operator before the performance begins, thus establishing on both record devices an index-marking by which the registry of the two records may be set for reproduction. After this initial indexing further indexing can be accomplished in like manner or by closing the switch 60, at any part of the production at which it is desired to introduce or omit the sound part.

It may sometimes be desirable to introduce a sound part artificially. For the sake of realism, presume that the camera is focused upon an approaching warship; dis-

visable to attempt sound recording. A silent picture of the approaching vessel is taken until such time as salutes or other sounds are produced, of which a companion sound record is desired. During the interval in which the camera was taking a silent motion photographic record, the phonograph remains inoperative. The instant the operator closes the switch 42 on the camera, that closes the clutch circuit, the energized magnets of the clutch attract the armature 31 and cause the mandrel of the phonograph carrying the wax record 43 to rotate. The operator then closes the switch 44 that closes the proper circuit to energize the dual marking devices 45 and 46. This action causes the film marker to score the film and the phonograph record marker to mark the sound record; thus establishing an initial, inseptive index point at which the dual companion records register. After the dual records have been made as above described, they are prepared for reproduction as follows: The photographic record is developed and processed to produce a photographic negative. Positives are printed from this negative. Each positive print discloses the index marks made on the negative by the film marker. These marks can be modified in any desirable manner to conform to the type of machine by which they are to be projected. The most desirable method is to perforate the record at or near the mark and use this perforation as a port in a pneumatic device adapted to operate a switch controlling the electro-magnetic clutch to start the phonographic record as set forth in my United States Patent, No. 1,065,576, June 24, 1913. Electric contact may be made through this port by contacts on opposite sides of the film to operate the starting clutch. Various means of utilizing the film marks are sufficiently obvious. The audible mark made on the phonographic record will manifest itself when the reproducing stylus reaches it. The vital requirement is that the inceptive points of the first co-action of the two records be absolutely in unison in the subsequent reproductions. For the perfect results that can be attained with the records marked by my present invention more than mere synchronism is possible. The register of the inceptive points can be reduced to an infinitesimal unit of time, and a register maintained throughout the performance.

The alternative pneumatic system of operating the record markers consists of the closed box 52 having the flexible diaphragm 53. This box is mounted on the cover 34, and has the marking point 54 fixed to the pivoted arm 53, whereby the pressure of the bulb 55 communicated through the tubing 56 distends the diaphragm 62 forcing ord film. The audible signal for the auditory record consists of a reed signal 57 connected to the bulb by the tubing 56 and located in the auditory horn. The back pressure in the tubing due to the fluttering of the reed is sufficient to cause the necessary distention of the diaphragm 53. The horn, 58 may be attached directly to the sound recording mechanism 59 of the phonograph. The pressure of the bulb 55 causes a visible mark on the photographic record, and an audible disturbance that makes its mark on the auditory phonographic record.

For simplicity in description the simultaneous index marking of two records only has been described. It is obvious that a multiplicity of consistent records might be so made and suitably marked. For instance, a phonographic, a photographic, an automatic piano record and a modified record for controlling variations in the lighting of the subject, etc. Such combinations are now contemplated by me, and I do not wish to be confined to the simplified disclosures herein in the interpretation of the scope of my invention.

The form of machine shown in Figs. 1 and 3 is adapted for both simultaneous and alternative marking. For simultaneous marking the button 44 is pressed, and for alternatively or independently indexing the several records the separate button switches 60 and 61, respectively controlling the film marker circuit and the audible record marker may be alternatively pressed. These divisional circuits can be multiplied as often as the number of independent records demand. Each switch can operate through a bus bar with a proper means for operating all switches simultaneously, should circumstances require.

The buzzer 46 when in action is included in the primary circuit of the induction coil and opens and closes the circuit as it vibrates. These vibrations act upon the magnets of the telephone receiver in the secondary circuit causing the telephone receiver diaphragm to vibrate in synchronism with the vibrations of the buzzer. The vibrations of the telephone receiver diaphragm act indirectly upon the recording means of the talking machine through the medium of air wave impulses and not by direct mechanical connection.

I claim:

1. Means for marking photographic and auditory records produced in unison, including an electric circuit; an electro-magnetic film marker, an electro-vibrant auditory record marker and a switch in said circuit.

2. Means for marking photographic and auditory records produced in unison, including an electric circuit; an electro-magnetic film marker, an electro-magnetic auditory

recording device, an electro-magnetic audible signal device operatable by said circuit, a battery and a switch in said circuit to control the operation of said marker and device; and telephonic connection whereby said audible signal device operates the auditory recording device.

3. Means for simultaneously marking photographic and auditory records produced in unison, including an electric circuit, an electro-magnetic film marker, an audible signal, a battery, a telephone transmitter, an induction coil, a telephone receiver in operative relation with said auditory recording device and a switch in said circuit; said film marker, signal device, telephone transmitter, induction coil, telephone receiver and record device all being operated by said circuit.

4. In a machine such as described, a motion picture camera and an auditory recording mechanism driven in unison, a film marking device mounted on said camera consisting of a magnet and a pivoted armature therefor, a marking point on said armature contiguous to the film passage of said camera, a record-marking device for said auditory recording mechanism, and means for operating both of said marking devices in unison.

5. In a machine such as described, a motion picture camera and an auditory recording mechanism driven in unison, a film marking device located contiguous to the film passage of said camera, and a record marking device consisting of a telephonic receiver in operative relation with the said auditory recording mechanism and a battery and a switch in the circuit with said receiver, and means for operating both of said marking devices in unison.

6. A phonographic and motion picture machine comprising an electric circuit, sound recording mechanism in said circuit, a signal device in telephonic connection with said sound-recording mechanism by means of said electric circuit, and a switch for said circuit.

7. In a phonographic and motion picture machine, an electric circuit, sound recording mechanism in said circuit, a signal device in telephonic connection with said sound-recording mechanism through said circuit, photographic record mechanism, means controlled by said circuit for intermittently marking the photographic record, and switch means for controlling said circuit.

8. Means for marking photographic and auditory records produced in unison for the purpose of establishing a point of registry between said records for synchronous reproduction, comprising a film marker, electro-magnetic means for operating the same, an auditory signal device, electro-magnetic means for operating said signal device, an electric circuit to operate said electro-magnetic means, a switch to control said circuit, means to produce auditory records and telephonic connection between said auditory signal device and the means for producing auditory records, said telephonic connection being operable with said circuit.

9. Means for marking photographic and auditory records produced in unison, comprising an electric circuit and an electro-magnetic film marker, a telephonic phonographic recording device, and an electro-magnetic audible signal device all operable by said circuit; said audible signal device being in telephonic connection with said auditory recording device; and a switch to open and close said circuit.

10. Means for producing a sound record, means for producing a photographic record, said means being connected for simultaneous operation, an auditory signal device, an electric circuit forming telephonic connection between the sound recorder and the signal device, an electro-magnetic marker for the photographic record, said marker being in circuit with said auditory signal device, and means to control said electric circuit for operating said markers.

In testimony whereof, I have hereunto set my hand at San Francisco, California, this 10th day of December, 1912.

EDWARD H. AMET.

Witnesses:

BALDWIN VALE,

J. B. GARDNER.

1010

E. SCHNEIDER.

FILM FEEDING MECHANISM.

APPLICATION FILED MAY 18, 1910.

1,165,629.

Patented Dec. 28, 1915.

4 SHEETS—SHEET 1.

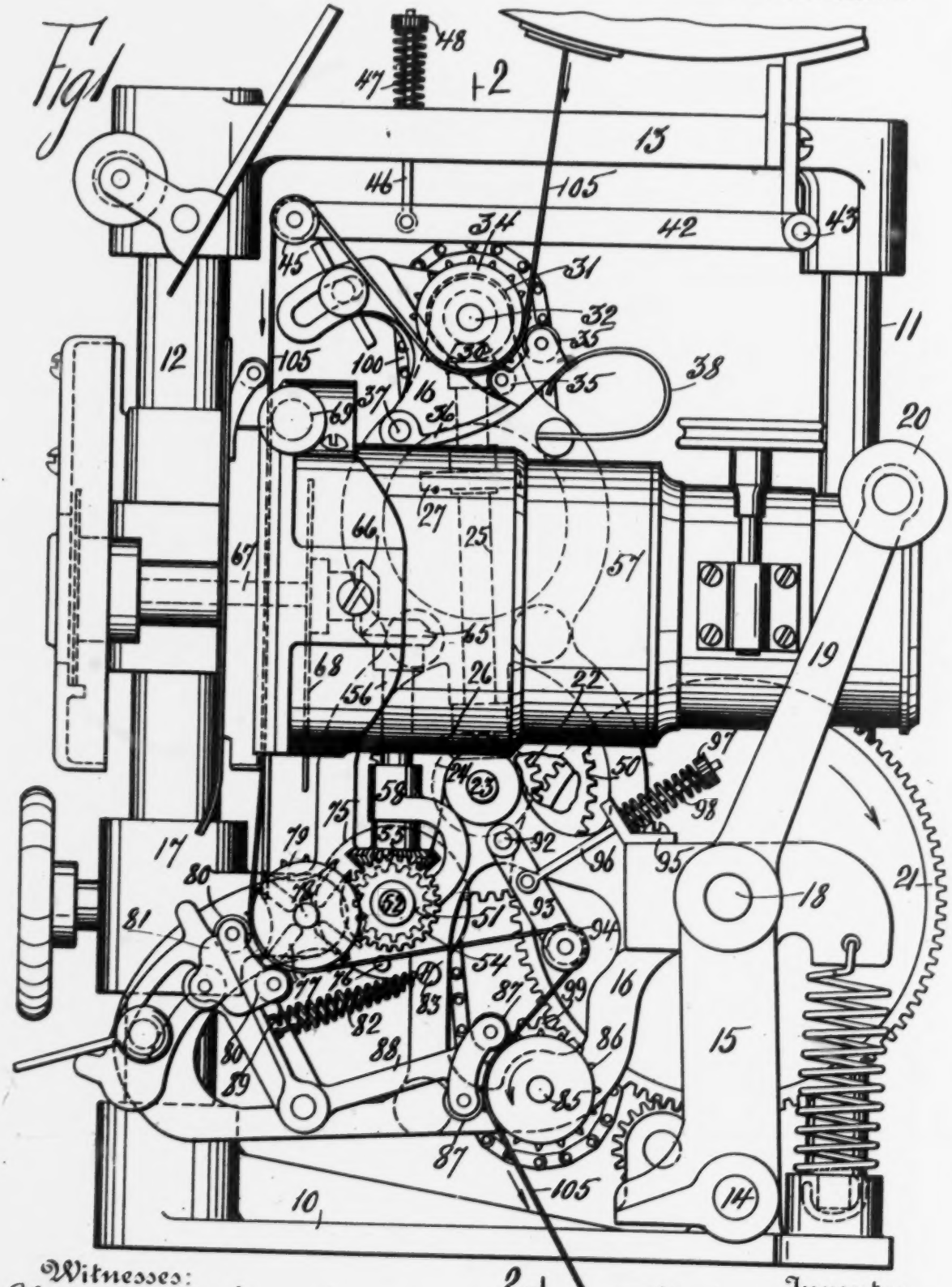

Witnesses:

Martin Zimanszky.

Inventor

Eberhard Schneider

1,165,629.

APPLICATION FILED MAY 18, 1910.

Patented Dec. 28, 1915.

4 SHEETS—SHEET 1.

Fig 1

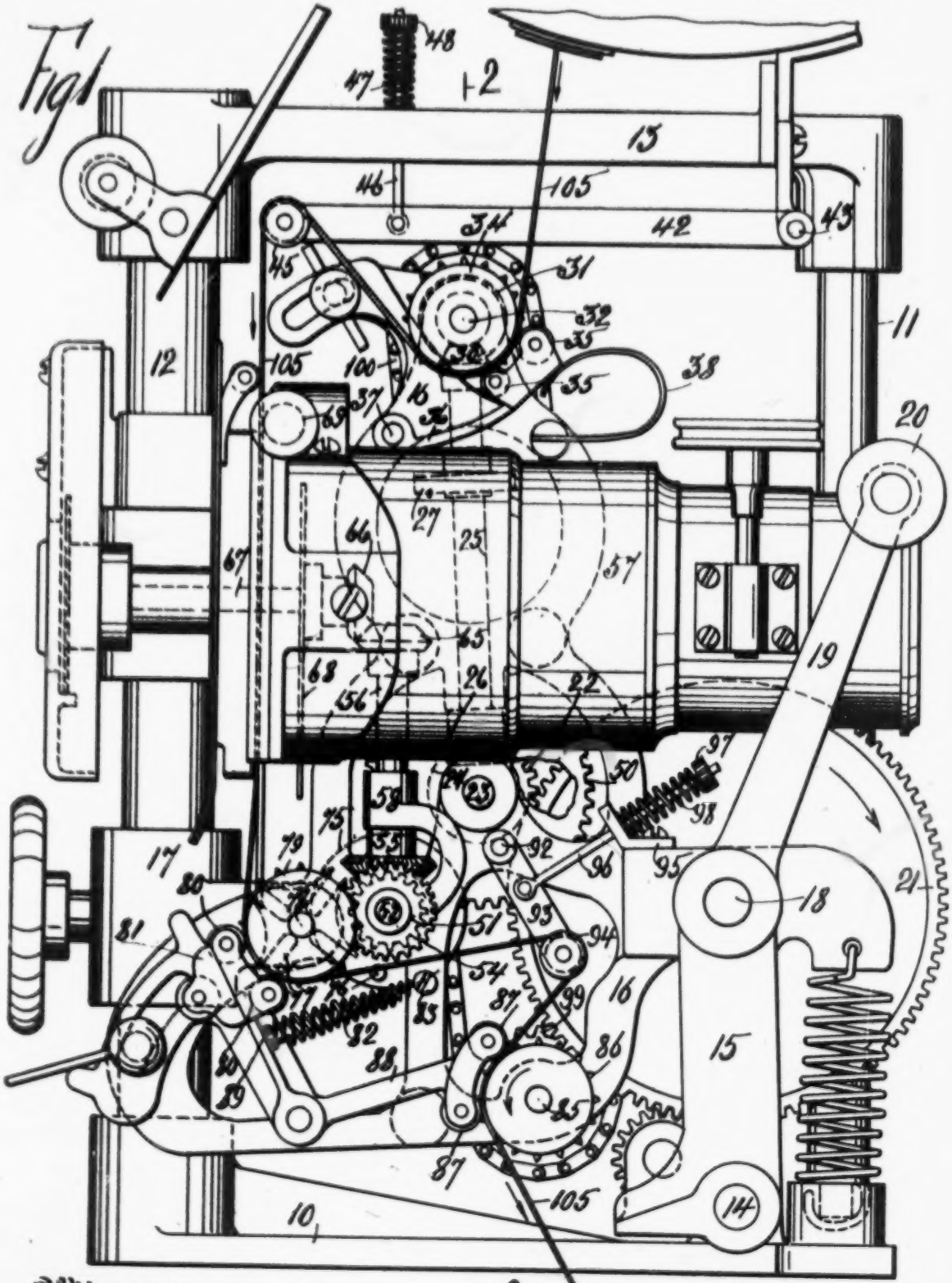

Witnesses:
Martin Zimansky
M. H. Cook

Inventor
Eberhard Schneider
By his Attorney
Addie Bomeville

1012

E. SCHNEIDER.

FILM FEEDING MECHANISM.

APPLICATION FILED MAY 18, 1910.

1,165,629.

Patented Dec. 28, 1915.

4 SHEETS—SHEET 2.

Fig 2

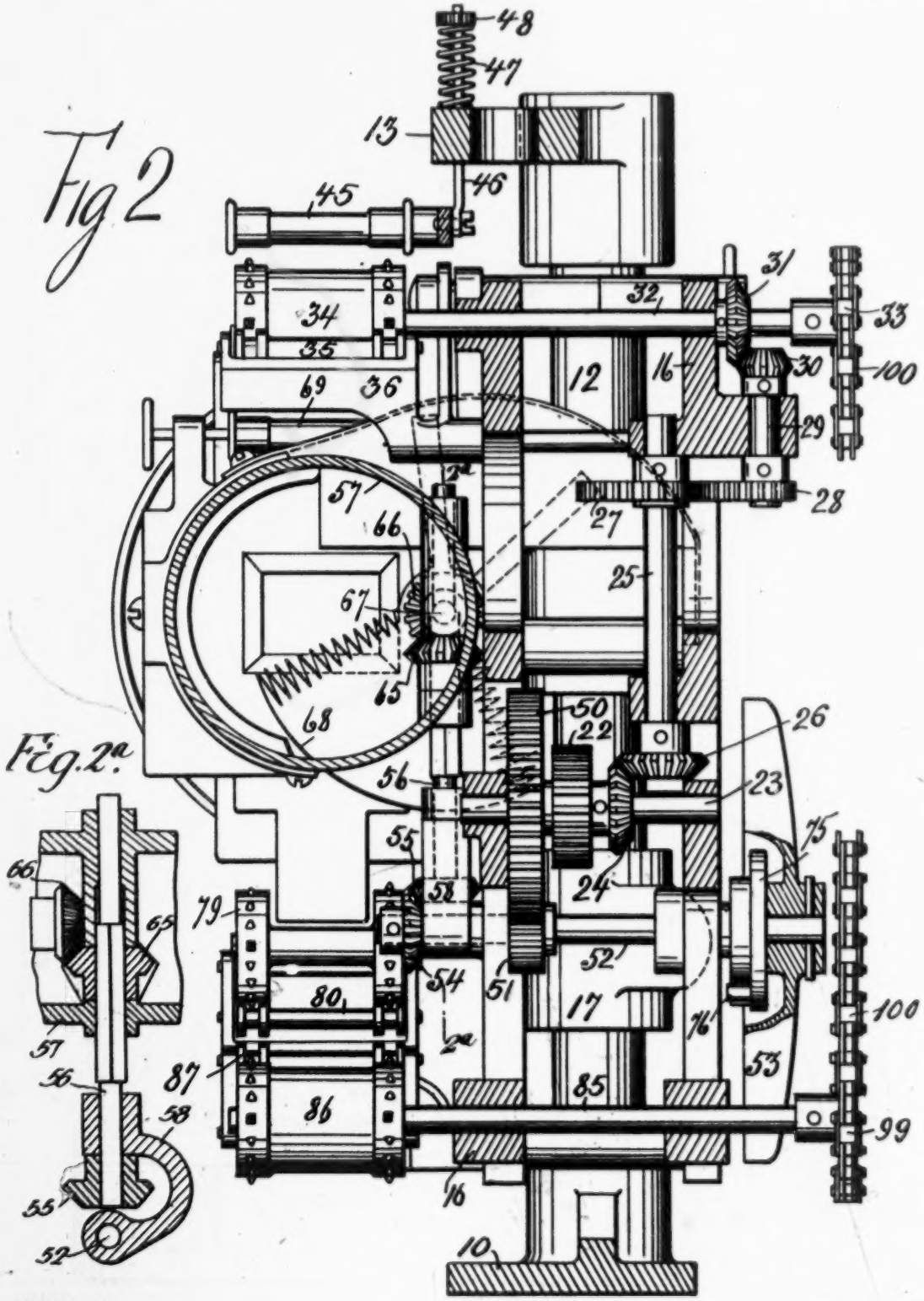

Fig. 2a.

Witnesses:

Inventor

FILM FEEDING MECHANISM.

APPLICATION FILED MAY 18, 1910.

1,165,629.

Patented Dec. 28, 1915.

4 SHEETS—SHEET 2.

Fig 2

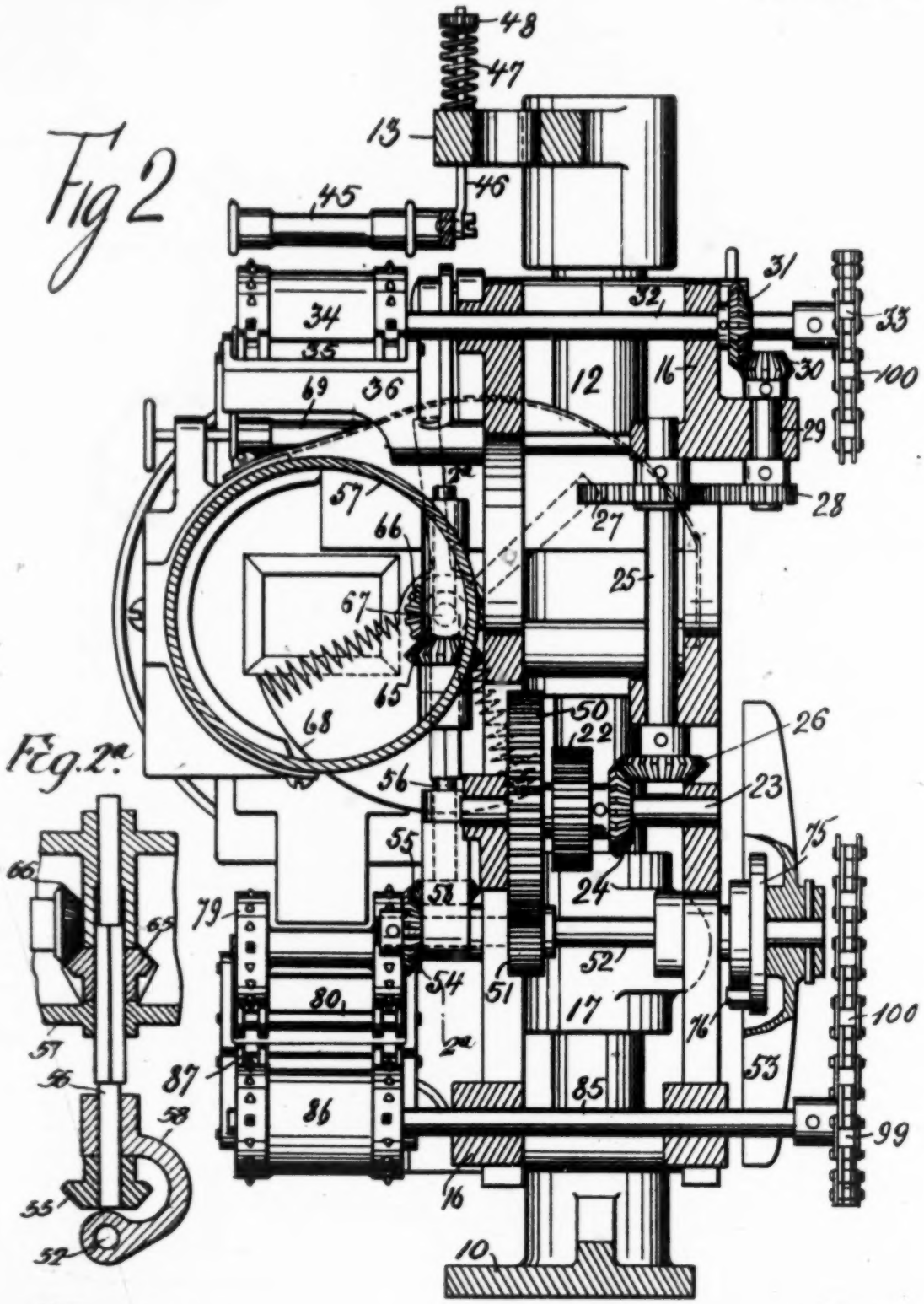

Fig. 2a.

Witnesses:

Martin Zimansky.

W. H. Church

Inventor

Eberhard Schneider

By his Attorney

A. A. de Bonneville

1014

E. SCHNEIDER.

FILM FEEDING MECHANISM.

APPLICATION FILED MAY 18, 1910.

1,165,629.

Patented Dec. 28, 1915.

4 SHEETS—SHEET 3.

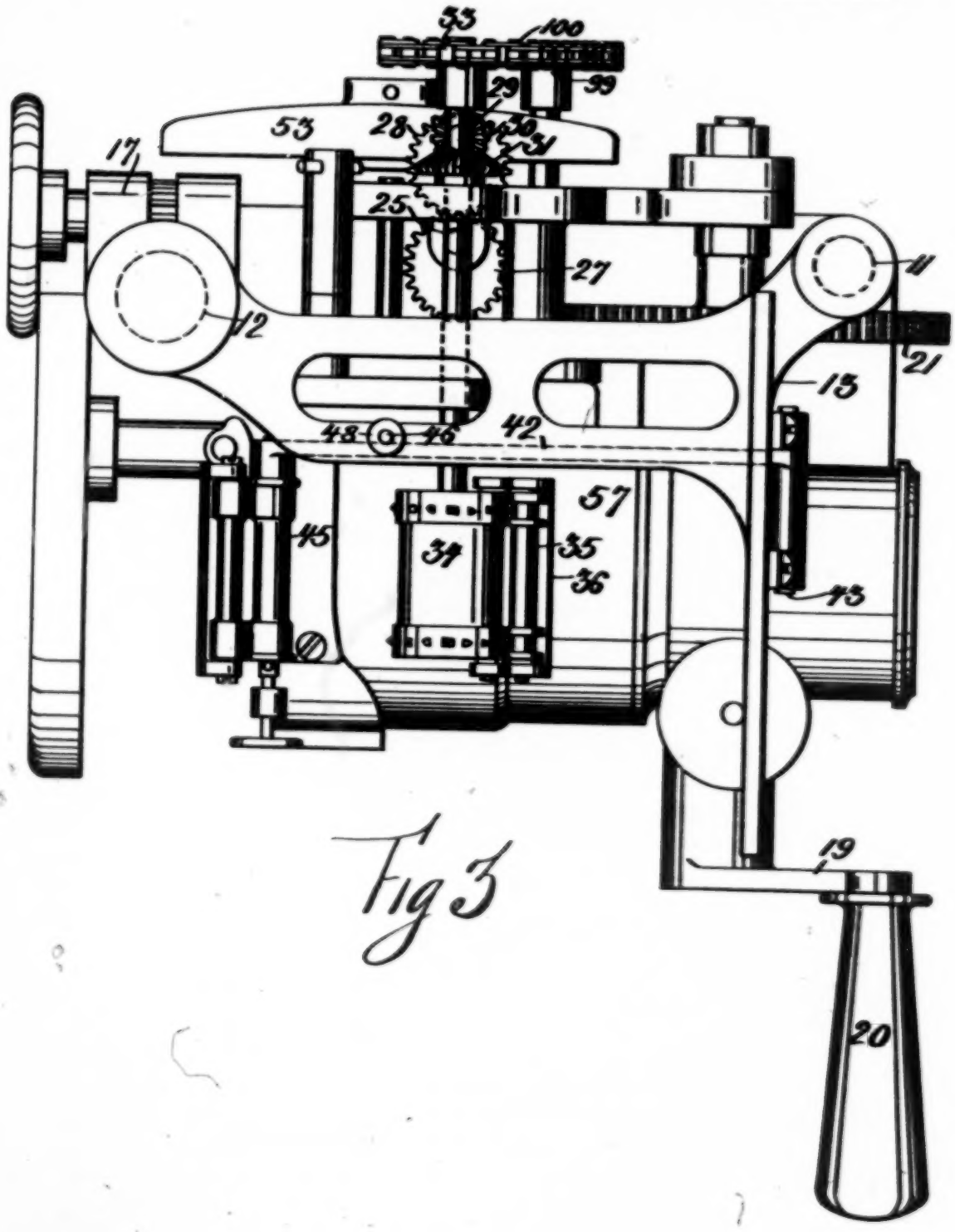

Fig 3

Witnesses:
Martin Zimansky
M. H. Cook

Inventor
Eberhard Schneider
By his Attorney
A. A. de Bernaville

1016

E. SCHNEIDER.

FILM FEEDING MECHANISM.

APPLICATION FILED MAY 18, 1910.

1,165,629.

Patented Dec. 28, 1915.

4 SHEETS—SHEET 4.

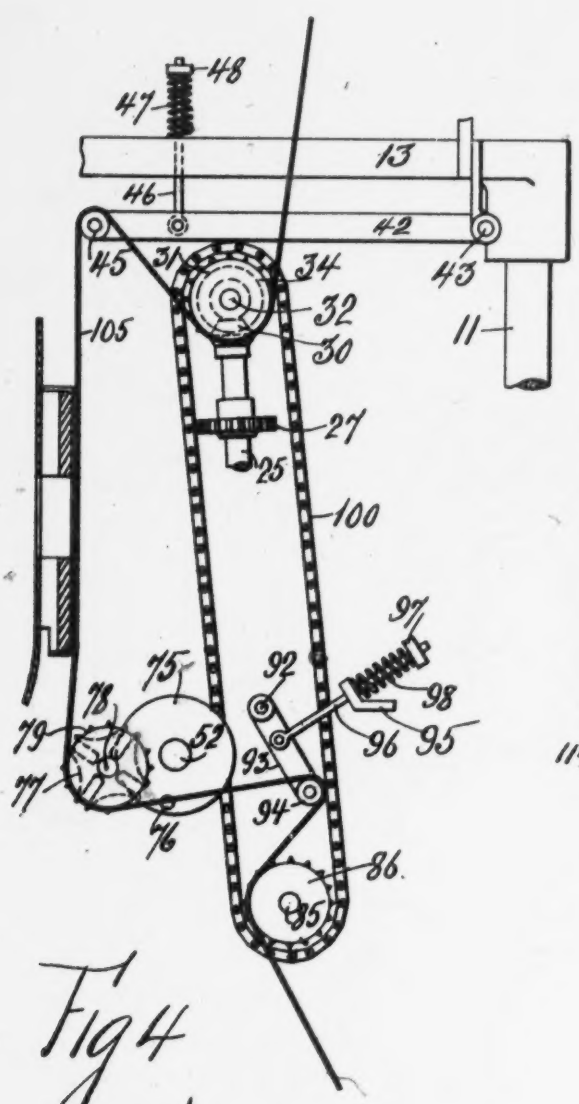

Fig 4

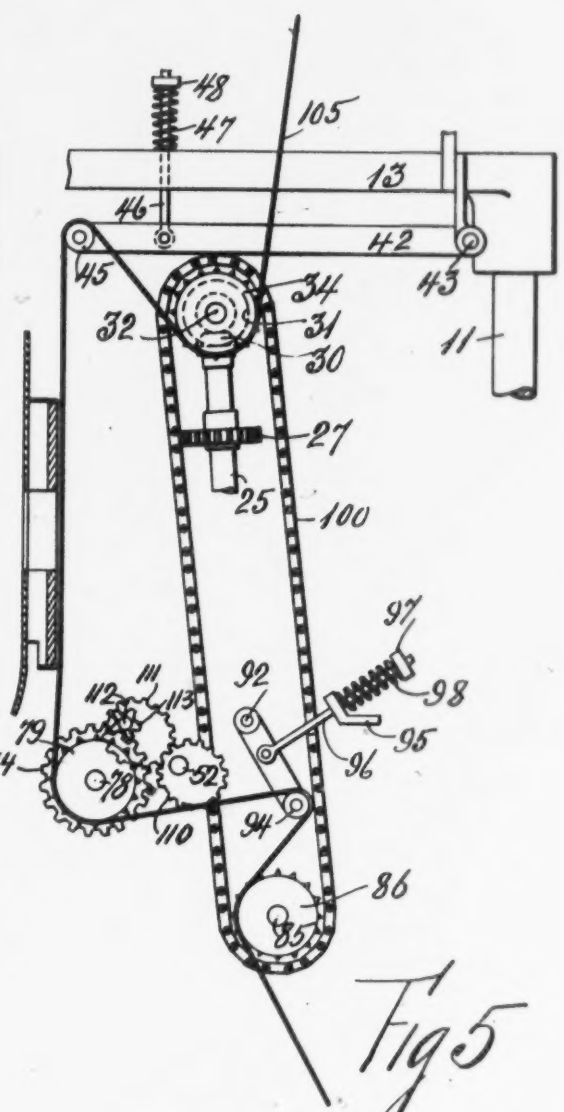

Fig 5

Witnesses:

Inventor

Eberhard Schneider

UNITED STATES PATENT OFFICE.

EBERHARD SCHNEIDER, OF NEW YORK, N. Y.

FILM-FEEDING MECHANISM.

1,165,629. Specification of Letters Patent. Patented Dec. 28, 1915.

Application filed May 18, 1910. Serial No. 562,057.

To all whom it may concern:

Be it known that I, EBERHARD SCHNEIDER, a citizen of the United States, and a resident of the borough of Manhattan, in the county of New York and State of New York, have invented certain new and useful Improvements in Film-Feeding Mechanism, of which the following is a specification.

This invention relates to film controlling and steadying devices for consecutive view photographic or projecting apparatus. Its specific object relates to the film controlling and propelling appurtenances which bring the films in proper positions and at the proper times in the axial line of the lens used in conjunction therewith.

One of its essential objects is to maintain said film taut before the window of the apparatus without the usual excessive pressure on the film caused by the door of the window of the apparatus bearing thereon. The pressure against the film as it passes the window is reduced to a minimum and consequently the liability of scratching or otherwise injuring the film is lessened.

Another object of the invention is the elimination of loops in the film during its propulsion between the reels of the apparatus.

Figure 1 represents a side view of a projecting apparatus with one form of the invention incorporated therein, Fig. 2 shows a section of Fig. 1 on the line 2—2, Fig. 2ª shows a section of Fig. 2 on the line 2ª, 2ª, Fig. 3 represents a top plan view of Fig. 1, Fig. 4 represents a side view of the essential elements of the invention, and Fig. 5 shows a view similar to Fig. 4 with a modification of the invention.

In the drawings 10 represents the base plate from which extend the stanchions 11, 12, the upper ends of which latter are connected by the bracket 13. The base plate 10 supports a pin 14 on which is pivoted the adjustable bracket 15. A frame 16 extends from the bracket 15 and is connected to the adjustable sleeve 17 carried on the stanchion 12. In the bracket 15 is journaled the driving shaft 18 that carries the operating crank 19 with the handle 20. A large spur gear 21 on the shaft 18 meshes with the pinion that meshes with a corresponding elliptical gear 28 on the spindle 29 that is journaled in the frame 16. The spindle 29 carries the bevel pinion 30 that meshes with the bevel gear 31 on the horizontal shaft 32, journaled in the upper portion of the frame 16. The ratio of the diameter of the bevel pinion 30 to the bevel gear 31 is 1 to 4. The shaft 32 carries at one end the sprocket wheel 33 and at the other the feeding sprocket drum 34. Tension rollers 35 are journaled in an adjustable tension bracket 36, which latter at one end is pivoted by means of the pivot 37 to the frame 16, and has bearing against its swinging end the spring 38. A tension arm 42 is pivoted on a pin 43 supported on the bracket 13 secured to the stanchions 11. The swinging end of the arm 42 has journaled thereon the tension roller 45 and a buffer rod 46 is pivoted thereon. The said rod extends through the bracket 13, a buffer spring 47 bearing between the roof of the bracket 13 and the knurled nut 48 on the rod.

On the cross shaft 23 of the frame 16 is secured the spur gear 50 which meshes with a pinion 51 carried on the shaft 52 journaled in the frame 16. The shaft 52 also carries the fly wheel 53 on one end and a bevel gear 54 on the other end thereof meshes with a bevel gear 55 carried on the vertical shaft 56. The latter shaft at its upper end is journaled in the lens support 57 and its lower end is journaled in the swinging bracket 58. The bracket 58 is hinged on the shaft 52. The shaft 56 carries a bevel gear 65 that meshes with a bevel gear 66 on the shutter spindle 67 carrying the shutter 68. The lens support 57 is carried on the stanchion 12 and has journaled thereon the guide roller 69. A disk wheel 75 is carried on the shaft 52 and has extending therefrom the pin 76 that engages a star wheel 77 fastened on a spindle 78 journaled in the frame 16. The spindle 78 carries the lower sprocket feed drum 79. Tension rollers 80 are journaled in an adjustable tension bracket 81 and bear on the said lower sprocket feed drum 79. The bracket 81 is pivoted to the frame 16 and a spring 82 extends between the bracket 81 and a pin 83 on the frame 16. A spindle 85 is journaled on

1,165,629. APPLICATION FILED MAY 18, 1910. Patented Dec. 28, 1915.
4 SHEETS—SHEET 4.

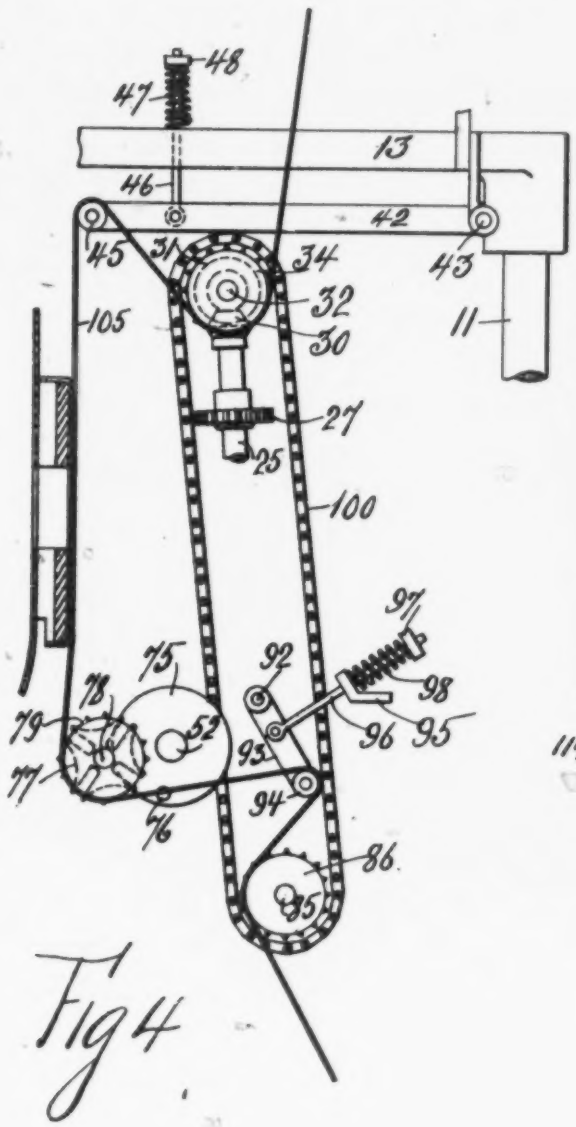

Fig 4

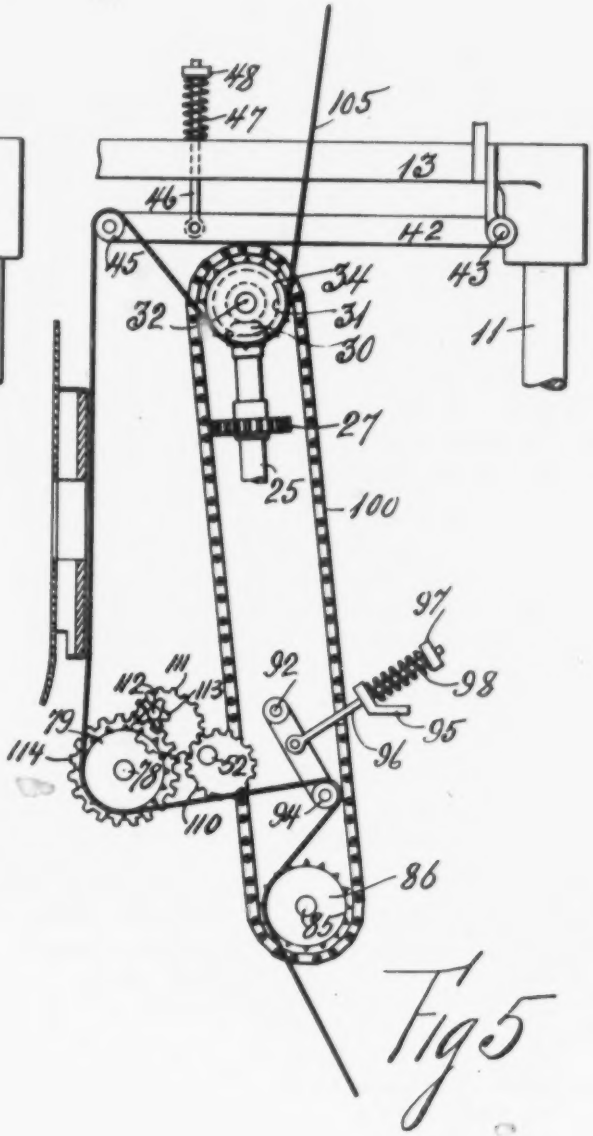

Fig 5

Witnesses:
Martin Zimansky
W. H. Cook

Inventor
Eberhard Schneider
By his Attorney
H. A. de Bonneville

UNITED STATES PATENT OFFICE.

EBERHARD SCHNEIDER, OF NEW YORK, N. Y.

FILM-FEEDING MECHANISM.

1,165,629. Specification of Letters Patent. Patented Dec. 28, 1915.

Application filed May 18, 1910. Serial No. 562,057.

To all whom it may concern:

Be it known that I, EBERHARD SCHNEIDER, a citizen of the United States, and a resident of the borough of Manhattan, in the county of New York and State of New York, have invented certain new and useful Improvements in Film-Feeding Mechanism, of which the following is a specification.

This invention relates to film controlling and steadying devices for consecutive view photographic or projecting apparatus. Its specific object relates to the film controlling and propelling appurtenances which bring the films in proper positions and at the proper times in the axial line of the lens used in conjunction therewith.

One of its essential objects is to maintain said film taut before the window of the apparatus without the usual excessive pressure on the film caused by the door of the window of the apparatus bearing thereon. The pressure against the film as it passes the window is reduced to a minimum and consequently the liability of scratching or otherwise injuring the film is lessened.

Another object of the invention is the elimination of loops in the film during its propulsion between the reels of the apparatus.

Figure 1 represents a side view of a projecting apparatus with one form of the invention incorporated therein, Fig. 2 shows a section of Fig. 1 on the line 2—2, Fig. 2^a shows a section of Fig. 2 on the line 2^a, 2^a, Fig. 3 represents a top plan view of Fig. 1, Fig. 4 represents a side view of the essential elements of the invention, and Fig. 5 shows a view similar to Fig. 4 with a modification of the invention.

In the drawings 10 represents the base plate from which extend the stanchions 11, 12, the upper ends of which latter are connected by the bracket 13. The base plate 10 supports a pin 14 on which is pivoted the adjustable bracket 15. A frame 16 extends from the bracket 15 and is connected to the adjustable sleeve 17 carried on the stanchion 12. In the bracket 15 is journaled the driving shaft 18 that carries the operating crank 19 with the handle 20. A large spur gear 21 on the shaft 18 meshes with the pinion 22 on the cross shaft 23, which latter also carries the bevel gear 24. A vertical shaft 25 carries the bevel gear 26 that meshes with the bevel gear 24. On the upper end of the shaft 25 is supported the elliptical gear 27 that meshes with a corresponding elliptical gear 28 on the spindle 29 that is journaled in the frame 16. The spindle 29 carries the bevel pinion 30 that meshes with the bevel gear 31 on the horizontal shaft 32, journaled in the upper portion of the frame 16. The ratio of the diameter of the bevel pinion 30 to the bevel gear 31 is 1 to 4. The shaft 32 carries at one end the sprocket wheel 33 and at the other the feeding sprocket drum 34. Tension rollers 35 are journaled in an adjustable tension bracket 36, which latter at one end is pivoted by means of the pivot 37 to the frame 16, and has bearing against its swinging end the spring 38. A tension arm 42 is pivoted on a pin 43 supported on the bracket 13 secured to the stanchions 11. The swinging end of the arm 42 has journaled thereon the tension roller 45 and a buffer rod 46 is pivoted thereon. The said rod extends through the bracket 13, a buffer spring 47 bearing between the roof of the bracket 13 and the knurled nut 48 on the rod.

On the cross shaft 23 of the frame 16 is secured the spur gear 50 which meshes with a pinion 51 carried on the shaft 52 journaled in the frame 16. The shaft 52 also carries the fly wheel 53 on one end and a bevel gear 54 on the other end thereof meshes with a bevel gear 55 carried on the vertical shaft 56. The latter shaft at its upper end is journaled in the lens support 57 and its lower end is journaled in the swinging bracket 58. The bracket 58 is hinged on the shaft 52. The shaft 56 carries a bevel gear 65 that meshes with a bevel gear 66 on the shutter spindle 67 carrying the shutter 68. The lens support 57 is carried on the stanchion 12 and has journaled thereon the guide roller 69. A disk wheel 75 is carried on the shaft 52 and has extending therefrom the pin 76 that engages a star wheel 77 fastened on a spindle 78 journaled in the frame 16. The spindle 78 carries the lower sprocket feed drum 79. Tension rollers 80 are journaled in an adjustable tension bracket 81 and bear on the said lower sprocket feed drum 79. The bracket 81 is pivoted to the frame 16 and a spring 82 extends between the bracket 81 and a pin 83 on the frame 16. A spindle 85 is journaled on the lower part of the frame 16 and carries a third sprocket drum 86.

Tension rollers 87 are journaled in an adjustable tension bracket 88 that is pivoted to the frame 16 and a spring 89 extends be-

tween said bracket and the pin 83. The frame 16 has extending therefrom a pin 92 which engages a tension arm 93 that carries on its outer end the tension roller 94. A bracket 95 is supported on the frame 16 and guides a buffer rod 96, that is pivoted to the tension arm 93. A knurled nut 97 is in threaded engagement with the outer end of the buffer rod 96 and a buffer spring 98 bears between said bracket 95 and knurled nut 97. On the outer end of the spindle 85 is fastened a sprocket wheel 99 for the chain 100 that connects with the sprocket wheel 33.

A film 105 having holes not shown that register with the teeth of the sprocket drums is fed over the feeding sprocket drum 34, then over the tension roller 45 in the path of the window of the lens support 57. The film then engages with the lower sprocket feed drum 79 over the tension roller 94 to the third sprocket drum 86.

In Fig. 5 the invention is modified by substituting a pair of elliptical gears 110 and 111 for the disk wheel 75 and the star wheel 77, to transmit a variable velocity ratio from the shaft 52 to the spindle 78. The elliptical gear 111 turns on the shaft 112 and carries the pinion 113 which latter meshes with the spur gear 112 that is carried on the spindle 78. When the pinion 113 makes one revolution, the spur gear 114 makes one quarter revolution. The pitch diameters of the bevel pinion 30 and bevel gears 31, as well as the pitch diameters of the pinion 113 and gear 114 are in the ratio of 1 to 4. The film is thus moved across the window of the apparatus during one quarter of a revolution of each of the drums 34 and 78, the rotations of the said drums being practically synchronized with each other so as to avoid the necessity of any loops therein. In this modification the elliptical gears 27 and 28 are retained.

To operate the invention motion is transmitted from the driving shaft 18 to the cross shaft 23 through the spur gear 21 and pinion 22. The bevel gear 24 on the shaft 23 rotates the shaft 25 through the bevel gear 26, and thereby the elliptical gear 27 rotates the elliptical gear 28. Motion is transmitted to the spindle 29 and its bevel pinion 30. The latter pinion meshing with the bevel gear 31 rotation is transmitted to the horizontal shaft 32. The latter shaft 32 making one revolution while the spindle 29 makes four revolutions. The sprocket wheel 33 transmits motion to the sprocket wheel 99 through the chain 100, and thereby the third sprocket drum 86 revolves with the same number of revolutions as the feeding sprocket drum 34. When the cross shaft 23 revolves motion is transmitted to the shaft wheel 75 on the shaft 52 operates the star wheel 77.

During the downward movement of the film 105 the tension roller 45 and the tension arm 42 take up any slack of the same between said roller and the feeding sprocket drum 34 and the lower sprocket feed drum 79 avoiding any loops in said film. The variable velocity ratio transmitted from the vertical shaft 25 to the spindle 29 through the intervention of the elliptic gears 27 and 28 rotates the feeding sprocket drum 34 at variable speeds of rotation, for each rotation thereof. The tension roller 45 always maintains the film 105 taut irrespective of the speed of the drum 34 and the winding up or taking in of the lower sprocket feed drum 79. The buffer spring 47 connected up with the arm 42 prevents any tremor of the roller 45. The star wheel 77 stops and starts the film at the proper times before the window of the machine in the focal axis of the lens.

The tension roller 94 on the tension arm 93 maintains the film taut between the lower sprocket feed drum 79 and the third sprocket drum 86, and the buffer spring 98 prevents any tremor of the tension roller 94.

With both forms of the invention it will be noted that the elliptical gears when their rotations are properly timed with the shutter of the apparatus that the film moves rapidly across the window when the shutter cuts off the light passing therethrough, and that when the light passes through the window the film can practically be considered at rest.

It will be noted that the variable speed imparted to the drum 34 by means of the elliptical gears 27, 28 pulls the film without tremor from the feeding or supply reel and therefore avoids injuring the film on the sprockets of the drum 34, and at the same time supplies it as required for the sprocket drum 79. The roller 45 maintains the film taut between the two drums, and obviates the necessity of a loop in the film after leaving the drum 34. The taut film avoids the necessity of intermittently tightly clamping the film in the field of the lens of the apparatus, and thereby avoids the injury due to such clamping. A film that is uniformly pulled from its feed reel must be looped to coact with the intermittent motion given to it by drum as indicated at 79. The clamping causes the film to be injured on account of the inertia of the film when clamped to hold it at rest in the field of the lens. The roller 45 by reason of being movable with the swinging of the tension arm 42, coacts with the elliptical gears 27 and 28, by taking up any slack in the film 105, as the latter is

1. In a film controlling device the combination of a pair of sprocket drums for a film, means to impart a variable speed to one of said drums during each revolution thereof, means to rotate the second drum in unison with the first drum and means to maintain said film taut.

2. In a film controlling device the combination of a feeding sprocket drum for a film, a pair of elliptical gears to impart a variable speed of rotation to the drum, a second sprocket drum to receive the film delivered from the first drum, means to rotate the second drum with the requisite speed of rotation, a roller bearing against the film to automatically maintain the film taut between the drums.

3. In a film controlling device the combination of a feeding sprocket drum for a film, a pair of elliptical gears connected up with said drum to impart thereto a variable speed of rotation, a tension arm pivoted in the machine, a roller journaled in the arm and bearing against said film to maintain it taut with said feeding drum, a lower sprocket feed drum journaled in the machine, means to rotate the latter drum, a second tension arm pivoted in the machine, a tension roller journaled in said second arm bearing against the film to maintain it taut.

4. In a film controlling device the combination of a sprocket feed drum for a film, elliptical gears connected up with said drum to impart thereto a variable speed of rotation, a tension arm pivoted in the apparatus, a roller journaled in the arm and bearing against said film to maintain it taut with said sprocket feed drum.

5. In a film controlling device the combination of a shaft, a disk wheel on the shaft, a pin on the disk wheel, a star wheel journaled adjacent to the first shaft in the path of said pin, a lower sprocket feed drum connected up with the star wheel, a feeding sprocket drum carried on a horizontal shaft, a driving shaft journaled in the apparatus, a pair of elliptical gears connected up between the driving shaft and the feeding sprocket drum, and connections between the driving shaft and the disk wheel, a tension arm pivoted in the apparatus, a roller journaled on the tension arm bearing against a film engaging the drums and taking up the slack of said film.

6. In a film controlling device the combination of a pair of elliptical gears, sprocket drums connected up with said elliptical gears to impart a variable speed of rotation to the said drums.

7. In a film controlling device the combination of a feeding sprocket drum journaled in the apparatus to engage a film, a lower sprocket feed drum journaled in the apparatus to next engage said film, a third sprocket drum journaled in the apparatus to thirdly engage said film, a driving shaft journaled in the apparatus, a pair of elliptical gears connected up between the said first named feeding sprocket drum and said shaft, connections between the driving shaft and the second drum to rotate the latter, and means to rotate the third sprocket drum.

8. In a film controlling device the combination of a feeding sprocket drum journaled in the apparatus to engage a film, a lower sprocket feed drum journaled in the apparatus to next engage said film, a third sprocket drum journaled in the apparatus to thirdly engage said film, a driving shaft journaled in the apparatus, a pair of elliptical gears connected up between the said first named feeding sprocket drum and said shaft, connections between the driving shaft and the second drum to rotate the latter, and means to rotate the third sprocket drum, a tension roller bearing on the film adjacent to the feeding sprocket drum, and a tension roller bearing on the film adjacent to the third drum.

9. In a film controlling device the combination of a driving shaft, a feeding sprocket drum journaled in the apparatus for a film, a tension arm pivoted above the drum, a tension roller journaled in the arm bearing against the film, a buffer spring in the apparatus for said arm, a second lower sprocket drum journaled in the apparatus engaging the film, a third sprocket drum journaled in the apparatus engaging the film, a second buffer spring connected up with the apparatus adjacent to the second and third drums, a tension arm coacting with the second buffer spring, a roller journaled in the second tension arm bearing against the film, a driving shaft journaled in the apparatus, a pair of elliptical gears connected up between said shaft and one of said drums, connections between the drum that coacts with said gears and one of the other drums, and connections between the driving shaft and the remaining drum.

Signed at the borough of Manhattan in the county of New York and State of New York this 11th day of May A. D. 1910.

EBERHARD SCHNEIDER. [L. S.]

Witnesses:

A. A. DE BONNEVILLE,

MARTIN ZIMANSKY.

which engages a tension arm 93 that carries on its outer end the tension roller 94. A bracket 95 is supported on the frame 16 and guides a buffer rod 96, that is pivoted to the tension arm 93. A knurled nut 97 is in threaded engagement with the outer end of the buffer rod 96 and a buffer spring 98 bears between said bracket 95 and knurled nut 97. On the outer end of the spindle 85 is fastened a sprocket wheel 99 for the chain 100 that connects with the sprocket wheel 33.

A film 105 having holes not shown that register with the teeth of the sprocket drums is fed over the feeding sprocket drum 34, then over the tension roller 45 in the path of the window of the lens support 57. The film then engages with the lower sprocket feed drum 79 over the tension roller 94 to the third sprocket drum 86.

In Fig. 5 the invention is modified by substituting a pair of elliptical gears 110 and 111 for the disk wheel 75 and the star wheel 77, to transmit a variable velocity ratio from the shaft 52 to the spindle 78. The elliptical gear 111 turns on the shaft 112 and carries the pinion 113 which latter meshes with the spur gear 112 that is carried on the spindle 78. When the pinion 113 makes one revolution, the spur gear 114 makes one quarter revolution. The pitch diameters of the bevel pinion 30 and bevel gears 31, as well as the pitch diameters of the pinion 113 and gear 114 are in the ratio of 1 to 4. The film is thus moved across the window of the apparatus during one quarter of a revolution of each of the drums 34 and 78, the rotations of the said drums being practically synchronized with each other so as to avoid the necessity of any loops therein. In this modification the elliptical gears 27 and 28 are retained.

To operate the invention motion is transmitted from the driving shaft 18 to the cross shaft 23 through the spur gear 21 and pinion 22. The bevel gear 24 on the shaft 23 rotates the shaft 25 through the bevel gear 26, and thereby the elliptical gear 27 rotates the elliptical gear 28. Motion is transmitted to the spindle 29 and its bevel pinion 30. The latter pinion meshing with the bevel gear 31 rotation is transmitted to the horizontal shaft 32. The latter shaft 32 making one revolution while the spindle 29 makes four revolutions. The sprocket wheel 33 transmits motion to the sprocket wheel 99 through the chain 100, and thereby the third sprocket drum 86 revolves with the same number of revolutions as the feeding sprocket drum 34. When the cross shaft 23 revolves motion is transmitted to the shaft 52 through the spur gear 50 and pinion 51. By means of the bevel gears 54, 55, 65 and 66 the shutter 68 is operated. The disk

During the downward movement of the film 105 the tension roller 45 and the tension arm 42 take up any slack of the same between said roller and the feeding sprocket drum 34 and the lower sprocket feed drum 79 avoiding any loops in said film. The variable velocity ratio transmitted from the vertical shaft 25 to the spindle 29 through the intervention of the elliptic gears 27 and 28 rotates the feeding sprocket drum 34 at variable speeds of rotation, for each rotation thereof. The tension roller 45 always maintains the film 105 taut irrespective of the speed of the drum 34 and the winding up or taking in of the lower sprocket feed drum 79. The buffer spring 47 connected up with the arm 42 prevents any tremor of the roller 45. The star wheel 77 stops and starts the film at the proper times before the window of the machine in the focal axis of the lens.

The tension roller 94 on the tension arm 93 maintains the film taut between the lower sprocket feed drum 79 and the third sprocket drum 86, and the buffer spring 98 prevents any tremor of the tension roller 94.

With both forms of the invention it will be noted that the elliptical gears when their rotations are properly timed with the shutter of the apparatus that the film moves rapidly across the window when the shutter cuts off the light passing therethrough, and that when the light passes through the window the film can practically be considered at rest.

It will be noted that the variable speed imparted to the drum 34 by means of the elliptical gears 27, 28 pulls the film without tremor from the feeding or supply reel and therefore avoids injuring the film on the sprockets of the drum 34, and at the same time supplies it as required for the sprocket drum 79. The roller 45 maintains the film taut between the two drums, and obviates the necessity of a loop in the film after leaving the drum 34. The taut film avoids the necessity of intermittently tightly clamping the film in the field of the lens of the apparatus, and thereby avoids the injury due to such clamping. A film that is uniformly pulled from its feed reel must be looped to coact with the intermittent motion given to it by drum as indicated at 79. The clamping causes the film to be injured on account of the inertia of the film when clamped to hold it at rest in the field of the lens. The roller 45 by reason of being movable with the swinging of the tension arm 42, coacts with the elliptical gears 27 and 28, by taking up any slack in the film 105, as the latter is moved with a variable speed.

Having described my invention what I desire to secure by Letters Patent and claim is;

1. In a film controlling device the combination of a pair of sprocket drums for a film, means to impart a variable speed to one of said drums during each revolution thereof, means to rotate the second drum in unison with the first drum and means to maintain said film taut.

2. In a film controlling device the combination of a feeding sprocket drum for a film, a pair of elliptical gears to impart a variable speed of rotation to the drum, a second sprocket drum to receive the film delivered from the first drum, means to rotate the second drum with the requisite speed of rotation, a roller bearing against the film to automatically maintain the film taut between the drums.

3. In a film controlling device the combination of a feeding sprocket drum for a film, a pair of elliptical gears connected up with said drum to impart thereto a variable speed of rotation, a tension arm pivoted in the machine, a roller journaled in the arm and bearing against said film to maintain it taut with said feeding drum, a lower sprocket feed drum journaled in the machine, means to rotate the latter drum, a second tension arm pivoted in the machine, a tension roller journaled in said second arm bearing against the film to maintain it taut.

4. In a film controlling device the combination of a sprocket feed drum for a film, elliptical gears connected up with said drum to impart thereto a variable speed of rotation, a tension arm pivoted in the apparatus, a roller journaled in the arm and bearing against said film to maintain it taut with said sprocket feed drum.

5. In a film controlling device the combination of a shaft, a disk wheel on the shaft, a pin on the disk wheel, a star wheel journaled adjacent to the first shaft in the path of said pin, a lower sprocket feed drum connected up with the star wheel, a feeding sprocket drum carried on a horizontal shaft, a driving shaft journaled in the apparatus, a pair of elliptical gears connected up between the driving shaft and the feeding sprocket drum, and connections between the driving shaft and the disk wheel, a tension arm pivoted in the apparatus, a roller journaled on the tension arm bearing against a film engaging the drums and taking up the slack of said film.

6. In a film controlling device the combination of a pair of elliptical gears, sprocket drums connected up with said elliptical gears to impart a variable speed of rotation to the said drums.

7. In a film controlling device the combination of a feeding sprocket drum journaled in the apparatus to engage a film, a lower sprocket feed drum journaled in the apparatus to next engage said film, a third sprocket drum journaled in the apparatus to thirdly engage said film, a driving shaft journaled in the apparatus, a pair of elliptical gears connected up between the said first named feeding sprocket drum and said shaft, connections between the driving shaft and the second drum to rotate the latter, and means to rotate the third sprocket drum.

8. In a film controlling device the combination of a feeding sprocket drum journaled in the apparatus to engage a film, a lower sprocket feed drum journaled in the apparatus to next engage said film, a third sprocket drum journaled in the apparatus to thirdly engage said film, a driving shaft journaled in the apparatus, a pair of elliptical gears connected up between the said first named feeding sprocket drum and said shaft, connections between the driving shaft and the second drum to rotate the latter, and means to rotate the third sprocket drum, a tension roller bearing on the film adjacent to the feeding sprocket drum, and a tension roller bearing on the film adjacent to the third drum.

9. In a film controlling device the combination of a driving shaft, a feeding sprocket drum journaled in the apparatus for a film, a tension arm pivoted above the drum, a tension roller journaled in the arm bearing against the film, a buffer spring in the apparatus for said arm, a second lower sprocket drum journaled in the apparatus engaging the film, a third sprocket drum journaled in the apparatus engaging the film, a second buffer spring connected up with the apparatus adjacent to the second and third drums, a tension arm coacting with the second buffer spring, a roller journaled in the second tension arm bearing against the film, a driving shaft journaled in the apparatus, a pair of elliptical gears connected up between said shaft and one of said drums, connections between the drum that coacts with said gears and one of the other drums, and connections between the driving shaft and the remaining drum.

Signed at the borough of Manhattan in the county of New York and State of New York this 11th day of May A. D. 1910.

EBERHARD SCHNEIDER. [L. S.]

Witnesses:

A. A. DE BONNEVILLE,

MARTIN ZIMANSKY.

1022

T. H. BLAIR.

KINETOSCOPE.

APPLICATION FILED OCT. 21, 1910.

1,186,069.

Patented June 6, 1916.

4 SHEETS—SHEET 1.

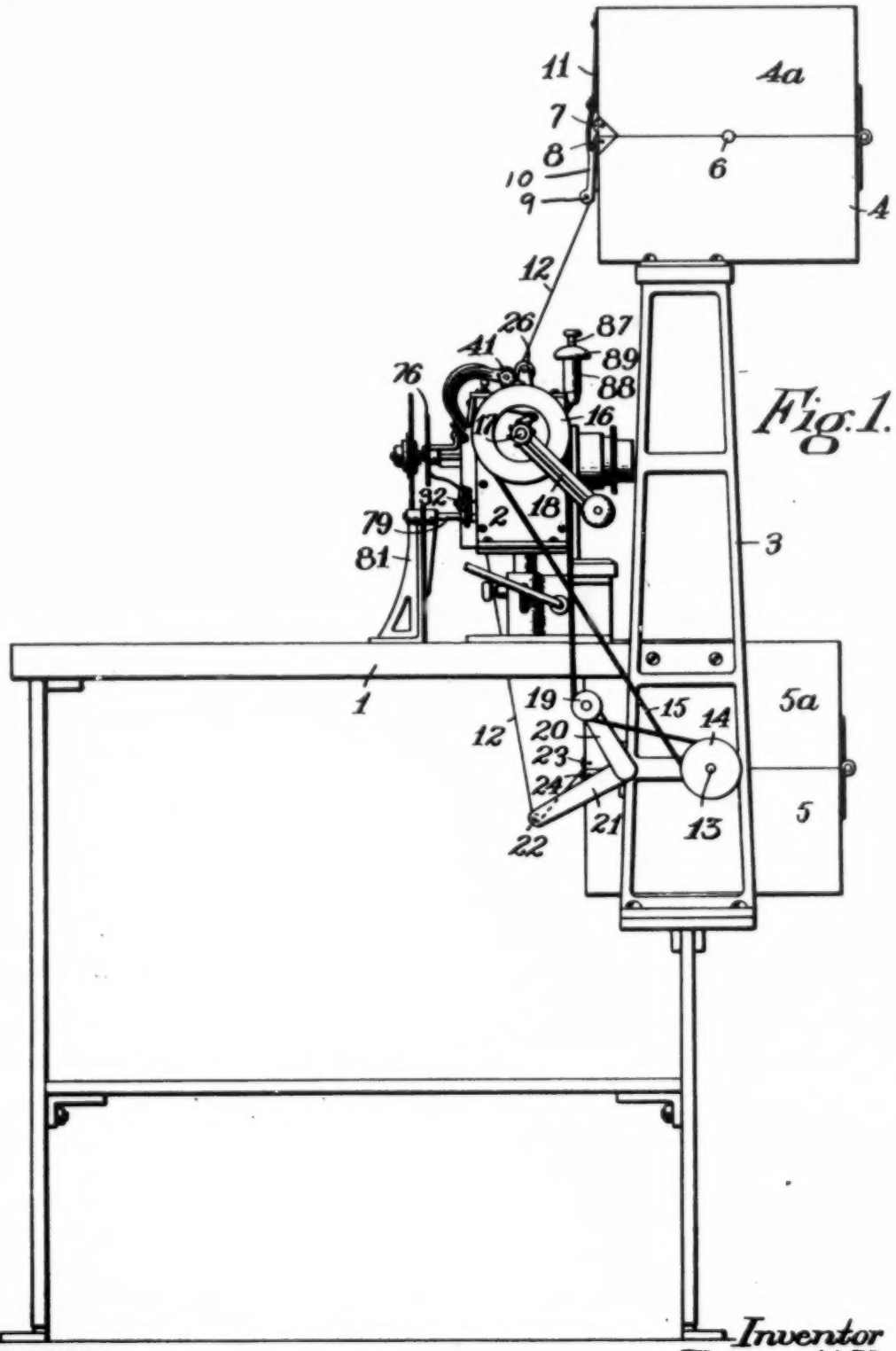

Fig. 1.

Witnesses.

R. D. Tolman.

Penelope Comberbach.

Inventor

Thomas H. Blair.

By Rufus B. Fowler

Attorney

1024

T. H. BLAIR.

KINETOSCOPE.

APPLICATION FILED OCT. 21, 1910.

1,186,069.

Patented June 6, 1916.

4 SHEETS—SHEET 2.

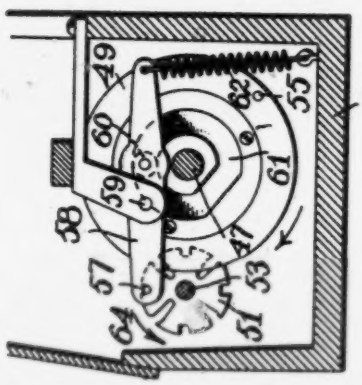

Fig. 7.

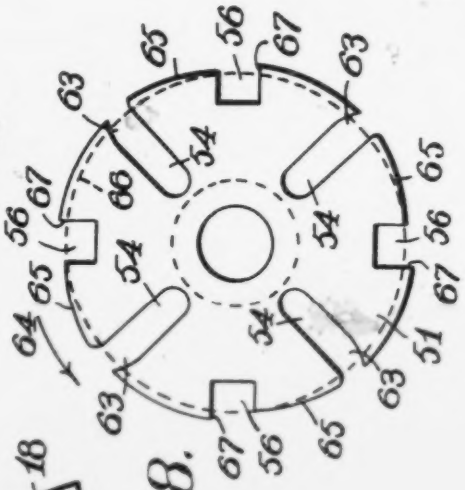

Fig. 8.

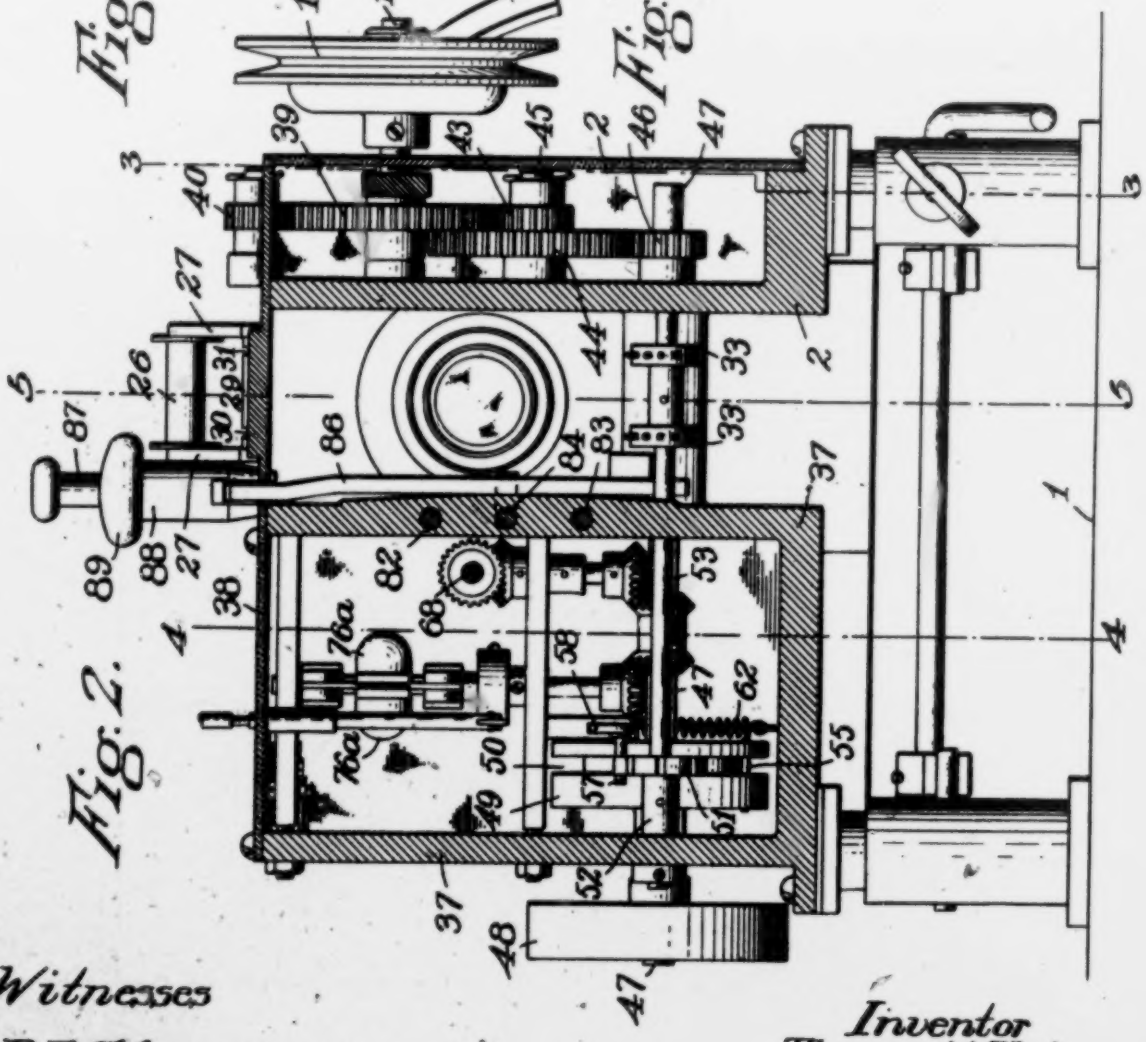

Fig. 2.

Witnesses

R. D. Kleman.

Inventor

Thomas H. Blair.

1,186,069.

Patented June 6, 1916.

4 SHEETS—SHEET 2.

Fig. 2.

Fig. 7.

Fig. 8.

Witnesses

R. D. Kleman

Inventor

Thomas H. Blair.

By Rufus B. Fowler

Attorney

1026

T. H. BLAIR.

KINETOSCOPE.

APPLICATION FILED OCT. 21, 1910.

1,186,069.

Patented June 6, 1916.

4 SHEETS—SHEET 3.

Fig. 4.

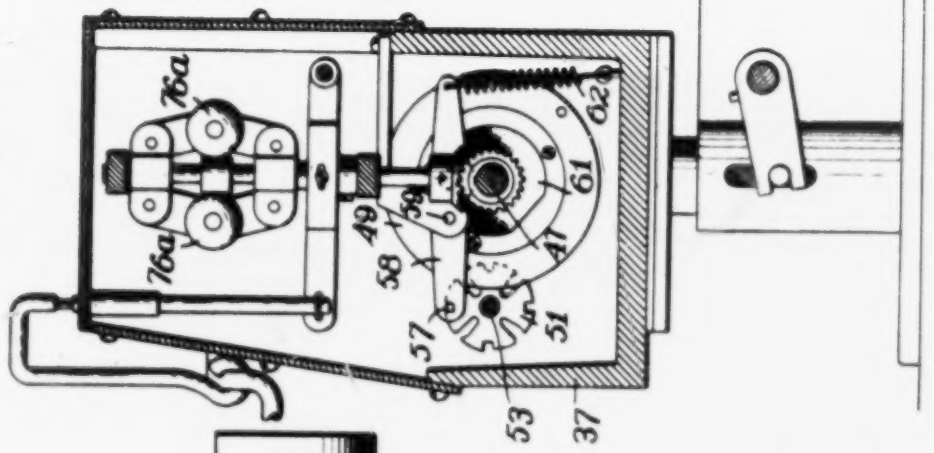

Fig. 3.

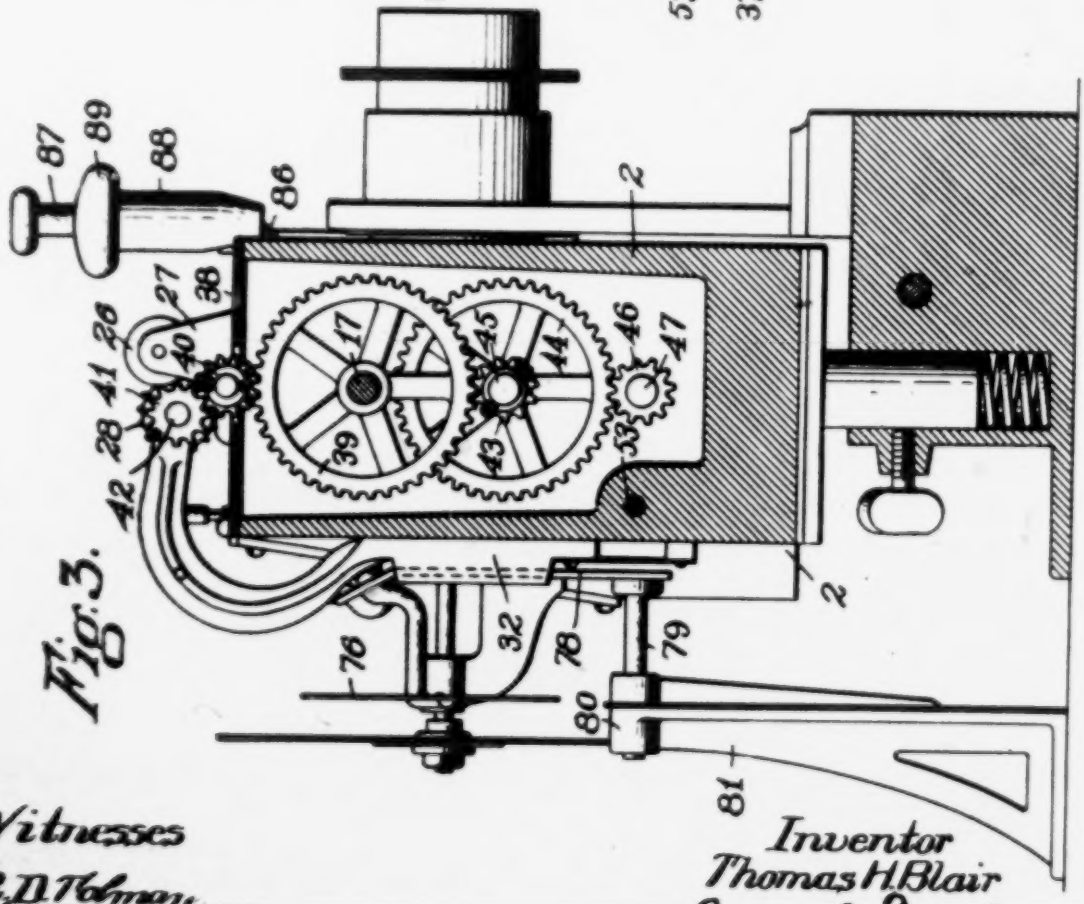

Witnesses

R. D. Tolman.

Inventor

Thomas H. Blair

1,186,069. APPLICATION FILED OCT. 21, 1910. Patented June 6, 1916.
4 SHEETS—SHEET 3.

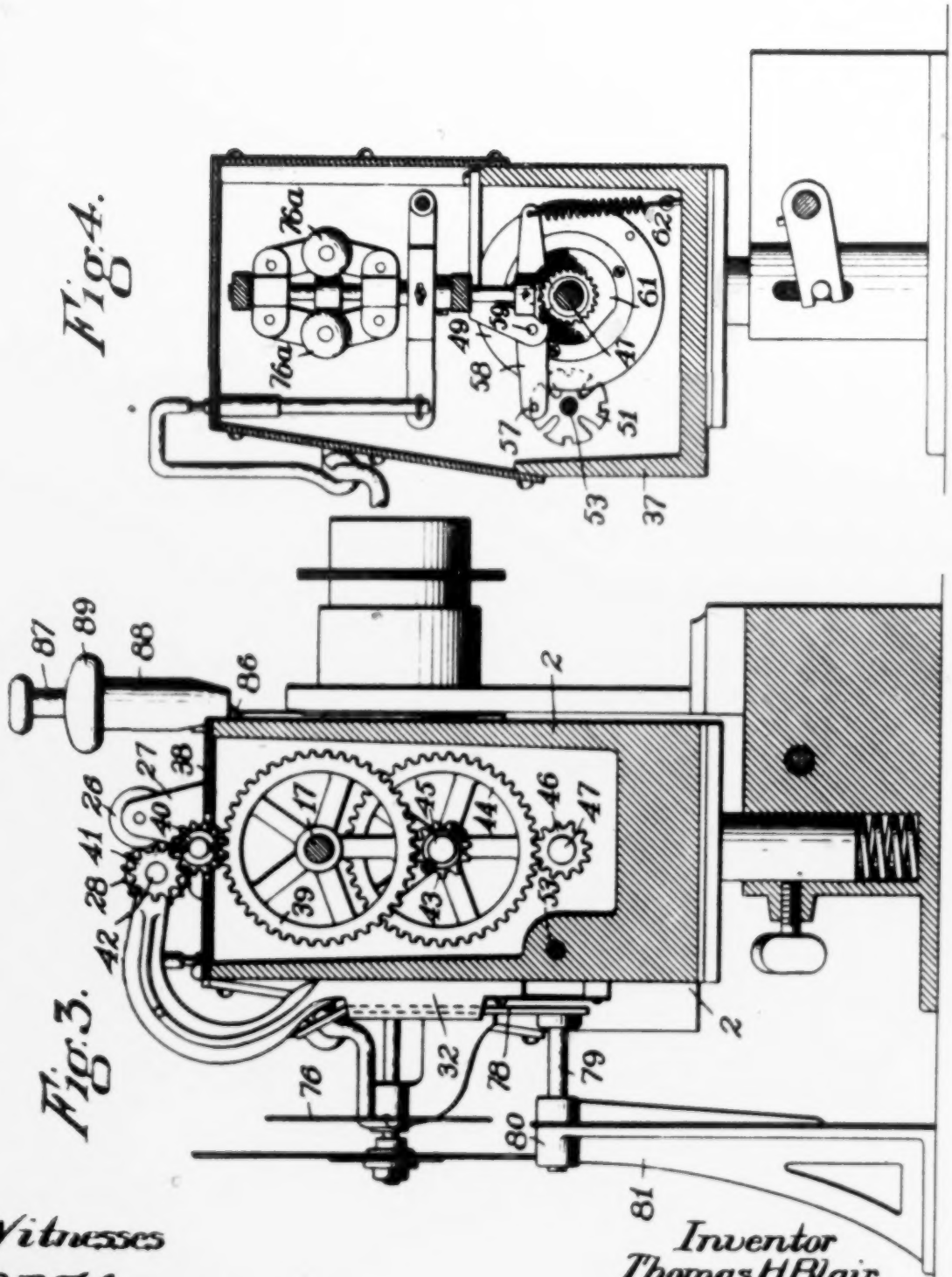

Witnesses
R. D. Tolman
Pendpalemberbach

Inventor
Thomas H. Blair
By Rufus B. Fowler
Attorney

1028

T. H. BLAIR.

KINETOSCOPE.

APPLICATION FILED OCT. 21, 1910.

1,186,069.

Patented June 6, 1916.

4 SHEETS—SHEET 4.

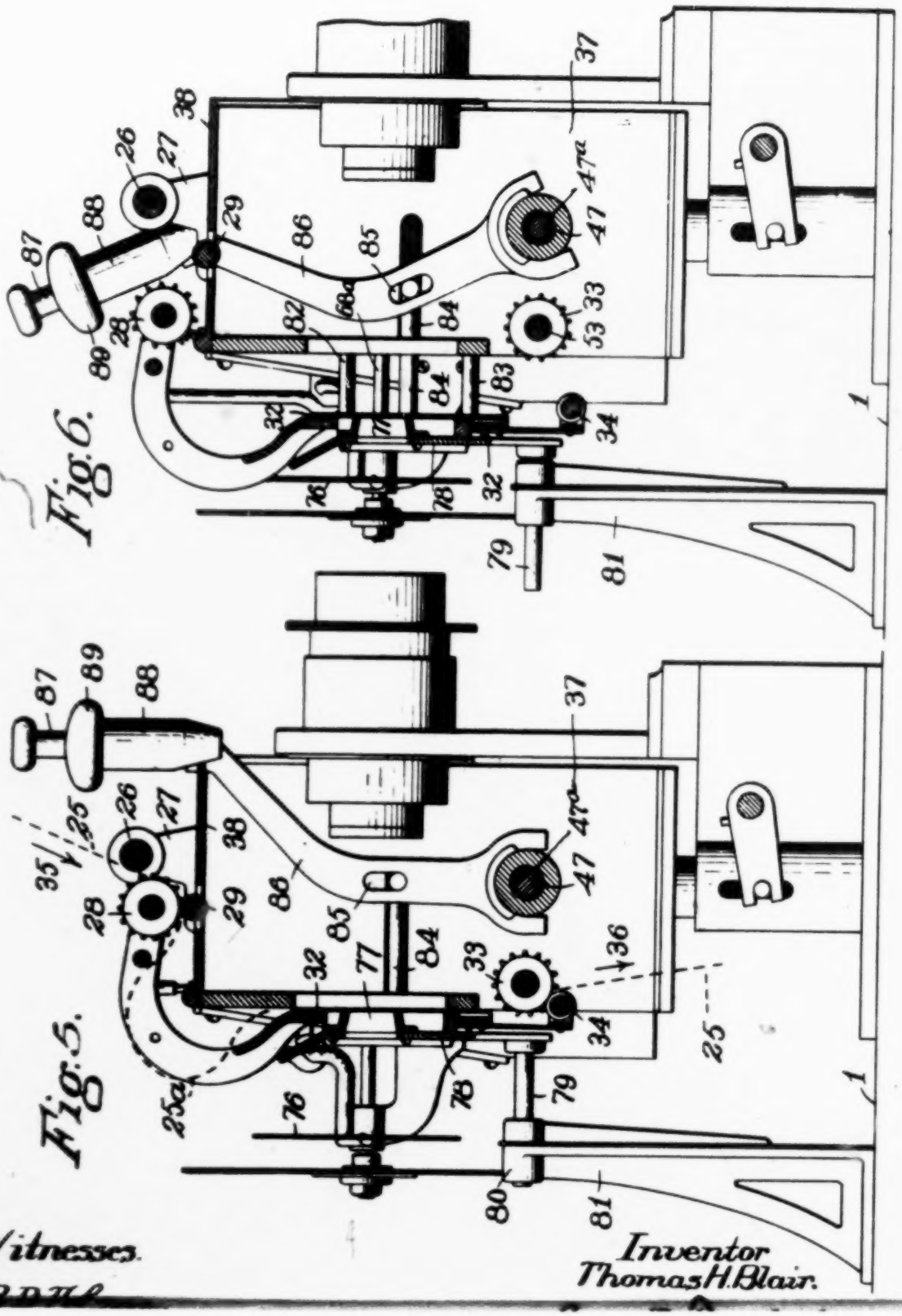

UNITED STATES PATENT OFFICE.

THOMAS H. BLAIR, OF NORTHBORO, MASSACHUSETTS.

KINETOSCOPE.

1,186,069. Specification of Letters Patent. Patented June 6, 1916.

Application filed October 21, 1910. Serial No. 588,375.

To all whom it may concern:

Be it known that I, THOMAS H. BLAIR, a citizen of the United States, residing at Northboro, in the county of Worcester and Commonwealth of Massachusetts, have invented a new and useful Improvement in Kinetoscopes, of which the following is a specification accompanied by drawings forming a part of the same.

The objects of my present invention are to increase the period of rest and correspondingly decrease the period of movement of the film; to simplify and render more efficient the film moving mechanism; and to remove the flickering upon the screen common in machines of this class; and these objects, among others, I accomplish by the construction and arrangement of parts as hereinafter described and pointed out in the annexed claims.

In the accompanying drawings, Figure 1 represents a side elevation of a kinetoscope embodying my invention. Fig. 2 is a rear view with the side of the case removed to disclose the operative mechanism. Fig. 3 is a vertical sectional view on the plane of the broken line 3—3, Fig. 2. Fig. 4 is a sectional view on the plane of the broken line 4—4, Fig. 2. Fig. 5 is a sectional view on the plane of the broken line 5—5, Fig. 2, showing the film actuating mechanism in its operative position. Fig. 6 represents the same sectional view as Fig. 5, but with the film actuating mechanism in position to receive the film. Fig. 7 is a detached view of the driving mechanism for imparting an intermittent movement to the film. Fig. 8 is a detached view of the star wheel of the film actuating mechanism shown on a larger scale than in Fig. 7.

Similar reference characters refer to similar parts in the different figures.

Referring to Fig. 1 of the drawings 1 denotes a stand or table upon which is mounted a film actuating mechanism, portions of which are inclosed within casings, one of which is shown at 2. Supported upon a framework 3 above the film actuating mechanism is a casing 4 for containing the coil of film as it is delivered to the film actuating mechanism. Below the table 1 is supported loosely upon a spindle 6. The film is delivered from the opposite end of the casing 4 between a pair of rolls 7 and 8. From the rolls 7 and 8 the film passes downward beneath a roll 9 carried in the lower end of a plate 10, which is attached to an elastic plate or spring 11, fastened at its upper end to the upper half 4^a of the casing. While the film is being delivered from the casing 4 its tension exerts a sufficient pressure against the roll 9 to slightly draw the plate 10 away from the casing and provide a free passage for the film. In case the film breaks or the tension is otherwise removed, the elasticity of the spring 11 will return the plate 10 against the casing, with the edges of the plate 10 in contact with the casing, thereby closing the passage as a precaution against the liability of fire entering the casing 4 in case the film becomes ignited.

The film 12 is moved through the machine by the film actuating mechanism and is finally wound upon a spool held within the casing 5 and attached to a spindle 13, which carries upon its outer end a belt pulley 14, having a belt connection 15 with a pulley 16 carried upon a shaft 17. The shaft 17 is rotated by any suitable means, in the present instance by the crank handle 18. The belt 15 is carried around a tightening pulley 19 supported in one arm 20 of a bell crank. The weight of the other arm 21 of the bell crank serves to carry the tightening pulley 19 against the belt and hold the latter sufficiently taut to cause it to rotate the winding spool on the spindle 13. The free end of the arm 21 carries a horizontal pin 22, beneath which the film 12 passes and thence between the rolls 23 and 24 to the winding spool in the case 5. If the tension of the film 12 as it passes to the winding spool exceeds the weight of the arm 21 the latter will be raised, and the pressure of the tightening pulley 19 upon the belt reduced to allow the belt to slip on the pulley 14, thereby checking the winding and preventing an undue strain from being exerted upon the film. Within the casing 5 is a safety device which is the duplicate of that em-

1,186,069.

APPLICATION FILED OCT. 21, 1910.

Patented June 6, 1916.

4 SHEETS—SHEET 4.

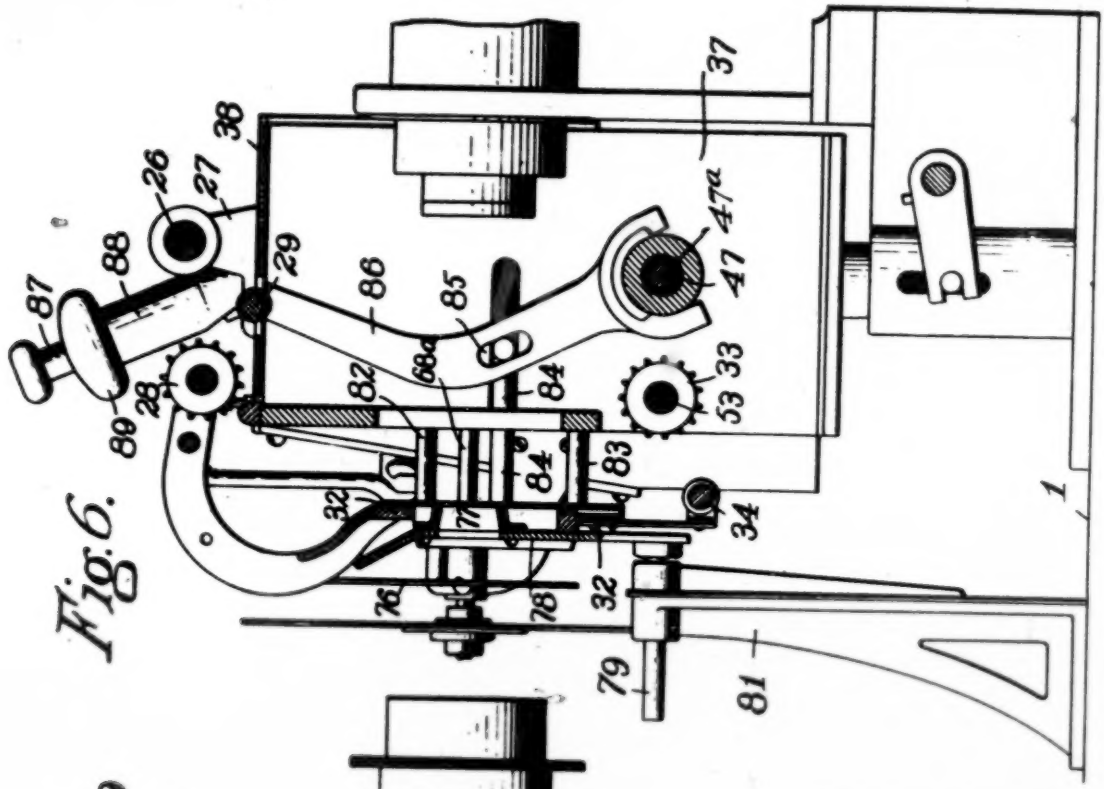

Fig. 6.

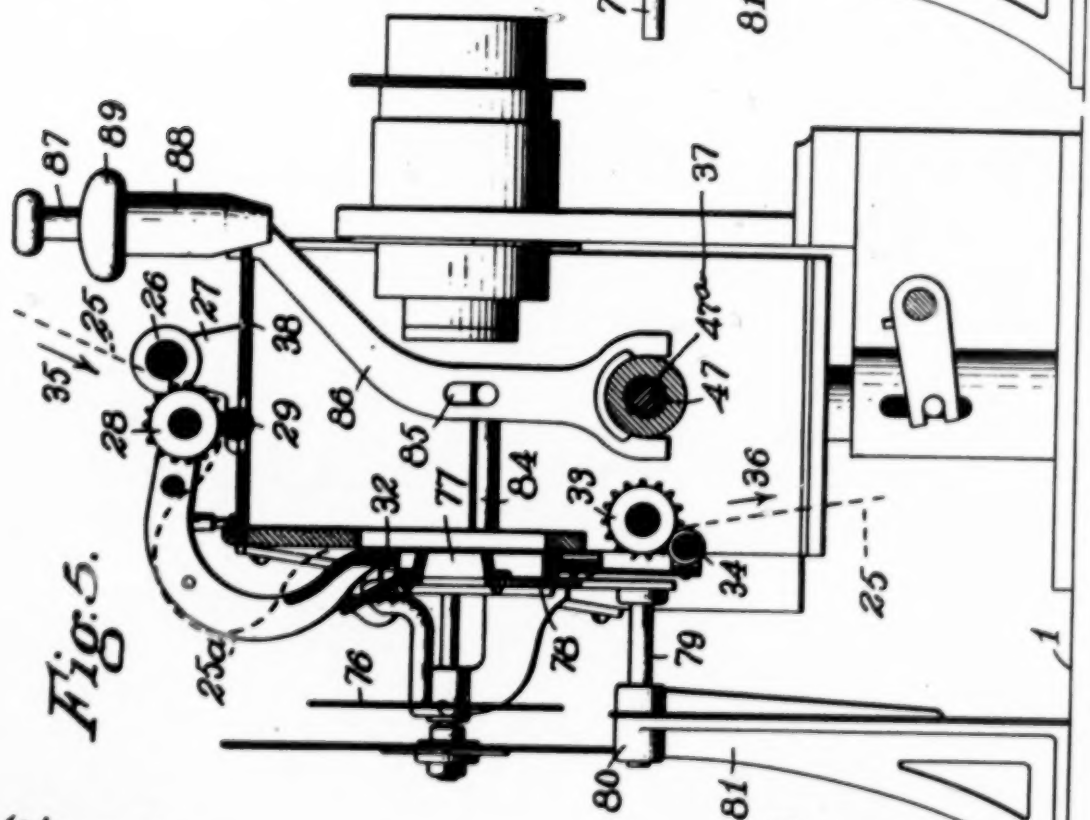

Fig. 5.

Witnesses.

R. D. Tolman.

Penelope Comberbach.

Inventor
Thomas H. Blair.

By Rufus B. Fowler

Attorney.

UNITED STATES PATENT OFFICE.

THOMAS H. BLAIR, OF NORTHBORO, MASSACHUSETTS.

KINETOSCOPE.

1,186,069. Specification of Letters Patent. Patented June 6, 1916.

Application filed October 21, 1910. Serial No. 588,375.

To all whom it may concern:

Be it known that I, THOMAS H. BLAIR, a citizen of the United States, residing at Northboro, in the county of Worcester and Commonwealth of Massachusetts, have invented a new and useful Improvement in Kinetoscopes, of which the following is a specification accompanied by drawings forming a part of the same.

The objects of my present invention are to increase the period of rest and correspondingly decrease the period of movement of the film; to simplify and render more efficient the film moving mechanism; and to remove the flickering upon the screen common in machines of this class; and these objects, among others, I accomplish by the construction and arrangement of parts as hereinafter described and pointed out in the annexed claims.

In the accompanying drawings, Figure 1 represents a side elevation of a kinetoscope embodying my invention. Fig. 2 is a rear view with the side of the case removed to disclose the operative mechanism. Fig. 3 is a vertical sectional view on the plane of the broken line 3—3, Fig. 2. Fig. 4 is a sectional view on the plane of the broken line 4—4, Fig. 2. Fig. 5 is a sectional view on the plane of the broken line 5—5, Fig. 2, showing the film actuating mechanism in its operative position. Fig. 6 represents the same sectional view as Fig. 5, but with the film actuating mechanism in position to receive the film. Fig. 7 is a detached view of the driving mechanism for imparting an intermittent movement to the film. Fig. 8 is a detached view of the star wheel of the film actuating mechanism shown on a larger scale than in Fig. 7.

Similar reference characters refer to similar parts in the different figures.

Referring to Fig. 1 of the drawings 1 denotes a stand or table upon which is mounted a film actuating mechanism, portions of which are inclosed within casings, one of which is shown at 2. Supported upon a framework 3 above the film actuating mechanism is a casing 4 for containing the coil of film as it is delivered to the film actuating mechanism. Below the table 1 is a casing 5 for containing the rewound coil of film. The casing 4 is divided horizontally at its center, with the upper half 4^a hinged at one end to permit the casing to be opened to receive a spool containing a coil of film supported loosely upon a spindle 6. The film is delivered from the opposite end of the casing 4 between a pair of rolls 7 and 8. From the rolls 7 and 8 the film passes downward beneath a roll 9 carried in the lower end of a plate 10, which is attached to an elastic plate or spring 11, fastened at its upper end to the upper half 4^a of the casing. While the film is being delivered from the casing 4 its tension exerts a sufficient pressure against the roll 9 to slightly draw the plate 10 away from the casing and provide a free passage for the film. In case the film breaks or the tension is otherwise removed, the elasticity of the spring 11 will return the plate 10 against the casing, with the edges of the plate 10 in contact with the casing, thereby closing the passage as a precaution against the liability of fire entering the casing 4 in case the film becomes ignited.

The film 12 is moved through the machine by the film actuating mechanism and is finally wound upon a spool held within the casing 5 and attached to a spindle 13, which carries upon its outer end a belt pulley 14, having a belt connection 15 with a pulley 16 carried upon a shaft 17. The shaft 17 is rotated by any suitable means, in the present instance by the crank handle 18. The belt 15 is carried around a tightening pulley 19 supported in one arm 20 of a bell crank. The weight of the other arm 21 of the bell crank serves to carry the tightening pulley 19 against the belt and hold the latter sufficiently taut to cause it to rotate the winding spool on the spindle 13. The free end of the arm 21 carries a horizontal pin 22, beneath which the film 12 passes and thence between the rolls 23 and 24 to the winding spool in the case 5. If the tension of the film 12 as it passes to the winding spool exceeds the weight of the arm 21 the latter will be raised, and the pressure of the tightening pulley 19 upon the belt reduced to allow the belt to slip on the pulley 14, thereby checking the winding and preventing an undue strain from being exerted upon the film. Within the casing 5 is a safety device which is the duplicate of that employed in connection with the casing 4, for closing the passage to the casing whenever the tension upon the film is removed.

Referring to Fig. 5, the course of the film past the film actuating mechanism is indicated by the broken line 25. As the film is

withdrawn from the casing 4 it passes over a spool 26 loosely journaled in brackets 27, thence beneath a sprocket wheel 28 and between it and a loosely journaled roll 29, having grooves 30, 31, to receive the teeth of the sprocket wheel 28. From the sprocket wheel 28 the film forms a loop, as shown at 25ª, Fig. 5, and passes downward in front of a plate forming part of a movable frame 32 to a sprocket wheel 33. The film then passes between the sprocket wheel 33 and a loosely journaled roll 34, provided with grooves to receive the teeth of the sprocket wheel, to the rewinding mechanism already described. The teeth of the sprocket wheels 28 and 33 engage small apertures in the opposite edges of the film, so that the rotation of the sprocket wheels will impart a forward movement to the film in the direction of the arrows 35 and 36.

By means of actuating mechanism, as hereinafter described, the rotation of the sprocket wheel 28 is continuous, while that of the sprocket wheel 33 is intermittent, and for this reason the loop 25ª is provided to prevent undue tension upon the film between the spocket wheels.

The mechanism for imparting a continuous rotary motion to the sprocket wheels 28 and an intermittent rotary motion to the sprocket wheels 33 by the continued rotation of the shaft 17 is inclosed in casings 2 and 37 placed side by side, with an open space between them, as shown in Fig. 2, which represents a rear view of the two casings, with the rear walls removed. Upon the top of the casings 2 and 37 is a plate 38 which serves as a cover for both casings and as a support for the brackets 27 in which the spool 26 is loosely journaled. The driving shaft 17 is journaled in the casing 2 and carries a gear 39 which engages a pinion 40, journaled in bearings on the plate 38 and projecting above the plate in position to be engaged by a pinion 41 on a shaft 42 which carries the sprocket wheels 28, whereby a continuous motion is imparted to the sprocket wheels 28. The gear 39 also engages a pinion 43 which is attached to a gear 44 both turning loosely on a stud 45 held by the casing 2. The gear 44 engages a pinion 46 attached to a shaft 47 which is journaled in bearings in the casings 2 and 37, and carries upon its outer end a balance wheel 48. Connecting the casings 2 and 37 and preferably integral therewith is a barrel or sleeve 47ª inclosing the shaft 47 between the casings 2 and 37 with an annular space between the shaft 47 and the sleeve 47ª through which oil may pass from the casing 2 to the casing 37.

Attached to the shaft 47 is a disk wheel 49 attached to a shaft 53. The shaft 53 is journaled in bearings in the casings 2 and 37 and in the open space between the casings 2 and 37 it carries the sprocket wheels 33. The star wheel 51 consists of a disk having four equidistant radial slots 54, which are periodically engaged by a driving pin 55 supported at its ends in the disk wheel 49 and extending across the annular groove 50.

Each engagement of the driving pin 55 with one of the radial slots 54 turns the star wheel one quarter of a revolution. The star wheel 51 is provided on its edge with notches 56 which are engaged during each period of rest of the star wheel 51 by a locking pin 57 carried in the end of a lever 58 which is pivoted at 59 to a fixed part of the machine.

The lever 58 carries a cam roll 60 which runs in a cam groove 61 on the side of the disk wheel 49. The cam roll 60 is held against the inner side of the cam groove 61 by means of a spiral spring 62 which connects one end of the lever 58 with the casing 37. The spring 62 serves to take up any lost motion which might occur in any part of the cam groove 61, but the cam groove is positive in its action and serves to rock the lever 58 in both directions, for the purpose of carrying the locking pin 57 into and out of the notches 56. The action of the driving pin 55 in imparting an intermittent motion to the star wheel 51 and the action of the cam groove 61 in raising and lowering the locking pin 57 are so timed that the locking pin will be carried out of one of the notches 56 during the movement of the star wheel and will be inserted in one of the notches 56 during its period of rest.

In order to insure the certain operation of the star wheel when it is moved at a high rate of speed, I make the outer ends of each of the radial slots 54 slightly curved, as shown at 63, Fig. 8, the curvature being concentric with and corresponding to the path of the driving pin 55 as the latter enters the edge of the star wheel. During the passage of the driving pin 55 through the curved section 63 of the radial slots no motion will be imparted to the star wheel, but the driving pin 55 will then serve to lock the star wheel from movement and allow cam groove 61 to complete the removal of the locking pin 57 from one of the notches 56. The driving pin 55 and the locking pin 57 are therefore both in engagement with the star wheel during the time in which the outer movement of the locking pin overlaps the inward movement of the driving pin. This allows the star wheel to be rotated with great rapidity without interfering with the certain and accurate operation of the driving and locking pins.

notch as the star wheel is rotated in the direction of the arrow 64, is made slightly eccentric to the axis of the star wheel by gradually reducing the diameter of that portion of the periphery of the star wheel approaching the notch 56, as shown at 65, Fig. 8, in which a broken line 66 concentric with the axis of the star wheel discloses the eccentricity of the periphery 65.

The eccentricity of the portion 65 of the periphery of the star wheel provides for the gradual depression of the locking pin 57, so that by the time it reaches one of the notches 56 it will have been depressed sufficiently to contact with the side wall 67 of the notch 56, thereby rendering the stopping of the star wheel certain at a predetermined point in its rotation, and at the same time rendering the action of the cam slot 61 less abrupt.

By my improved construction of the star wheel with the overlapping action of the locking and driving pins, I am able to increase the speed of the star wheel during its period of movement, and thereby reduce the period of its movement relatively to its period of rest.

By reducing the time in which it is necessary to move the film and increasing the period of rest, I am able to correspondingly reduce the period in which the light is cut off from the film, and thereby increase the illumination of the picture thrown upon the screen, and at the same time improving the quality of the illumination by decreasing the flickering effect of the light upon the screen.

A fire screen 76 is arranged to fall by gravity between the film and the source of light and is raised whenever the film acquires its required speed by its connection with a centrifugal governor 76ª which is operatively connected with the shaft 47 in the usual manner of apparatus of this class. The film is illuminated from any suitable source of light arranged to shine upon the film through an opening 77, Fig. 5, in a plate 78 attached to a spindle 79 capable of sliding longitudinally in a fixed bearing 80, which is supported upon a bracket 81 resting upon the table 1. The plate 78 is held in ways in the plate 32 to provide a sliding connection between the two plates. The plate 32 is attached to spindles 82 and 83 which are capable of sliding longitudinally in the casing 37. Attached to the plate 32 is a rod 84 having its inner end bent at right angles and entering a slot 85 in a lever 86, pivotally supported at its lower end and provided with a handle 87 at its upper end, on which is a sliding sleeve 88, provided the front edge of the plate 38 and hold the plate 32 in its operative position, as shown in Fig. 5. Whenever it is desired to insert the film in the apparatus the sleeve 88 is raised, thereby releasing the lever 86 and the handle 87 is moved rearwardly into the position shown in Fig. 6. The connection between the plate 32 and the lever 86 by means of the rod 84 causes the plate 32 to be moved rearwardly into the position shown in Fig. 6, affording sufficient space for the film to be carried beneath the sprocket wheel 28 and in front of the plate 32, and between the sprocket wheel 33 and the loosely journaled roll 34.

When the film has been placed in position the handle 87 is moved forward, bringing the lever 86 and plate 32 into the position shown in Fig. 5, when the parts are again locked in position by the depression of the sleeve 88.

By means of my improved film actuating mechanism by which I secure absolute accuracy of the intermittent movement, I am able to greatly reduce the period of movement of the film relative to its period of rest. By experiment I have found it possible to successfully operate the apparatus with the film movement from one ninth to one tenth the period of its rest, while hitherto so far as I am aware, the period of movement has not been less than one fourth or one fifth of the period of rest, and in many machines not less than one third. By decreasing the relative period of movement I am enabled to make the actual movement of the film much slower and thereby obviate the accelerated movements of the objects on the screen, rendering them more deliberate and in accordance with the natural movements of the objects in life.

I claim,

1. In an apparatus of the class described, a film actuating mechanism comprising a continuously rotating driving shaft provided with a disk carrying a driving pin, a driven shaft carrying a star wheel having equidistant radial slots, with the entrance to each of said slots curved to correspond with the curvature of the path of said driving pin, whereby the driving pin will lock said star wheel from rotation during the passage of the driving pin through the curved portion of each slot.

2. In an apparatus of the class described, an actuating mechanism for imparting an intermittent motion to a film comprising sprocket wheels for engaging the film, a shaft carrying said sprocket wheels, a star wheel on said shaft consisting of a disk di-

tween it and a loosely journaled roll 29, having grooves 30, 31, to receive the teeth of the sprocket wheel 28. From the sprocket wheel 28 the film forms a loop, as shown at 25ª, Fig. 5, and passes downward in front of a plate forming part of a movable frame 32 to a sprocket wheel 33. The film then passes between the sprocket wheel 33 and a loosely journaled roll 34, provided with grooves to receive the teeth of the sprocket wheel, to the rewinding mechanism already described. The teeth of the sprocket wheels 28 and 33 engage small apertures in the opposite edges of the film, so that the rotation of the sprocket wheels will impart a forward movement to the film in the direction of the arrows 35 and 36.

By means of actuating mechanism, as hereinafter described, the rotation of the sprocket wheel 28 is continuous, while that of the sprocket wheel 33 is intermittent, and for this reason the loop 25ª is provided to prevent undue tension upon the film between the spocket wheels.

The mechanism for imparting a continuous rotary motion to the sprocket wheels 28 and an intermittent rotary motion to the sprocket wheels 33 by the continued rotation of the shaft 17 is inclosed in casings 2 and 37 placed side by side, with an open space between them, as shown in Fig. 2, which represents a rear view of the two casings, with the rear walls removed. Upon the top of the casings 2 and 37 is a plate 38 which serves as a cover for both casings and as a support for the brackets 27 in which the spool 26 is loosely journaled. The driving shaft 17 is journaled in the casing 2 and carries a gear 39 which engages a pinion 40, journaled in bearings on the plate 38 and projecting above the plate in position to be engaged by a pinion 41 on a shaft 42 which carries the sprocket wheels 28, whereby a continuous motion is imparted to the sprocket wheels 28. The gear 39 also engages a pinion 43 which is attached to a gear 44 both turning loosely on a stud 45 held by the casing 2. The gear 44 engages a pinion 46 attached to a shaft 47 which is journaled in bearings in the casings 2 and 37, and carries upon its outer end a balance wheel 48. Connecting the casings 2 and 37 and preferably integral therewith is a barrel or sleeve 47ª inclosing the shaft 47 between the casings 2 and 37 with an annular space between the shaft 47 and the sleeve 47ª through which oil may pass from the casing 2 to the casing 37.

Attached to the shaft 47 is a disk wheel 49 having an annular groove 50 in its periphery, in which is inserted the edge of a star wheel 51, having a hub 52 Fig. 2 which is in the open space between the casings 2 and 37 it carries the sprocket wheels 33. The star wheel 51 consists of a disk having four equidistant radial slots 54, which are periodically engaged by a driving pin 55 supported at its ends in the disk wheel 49 and extending across the annular groove 50.

Each engagement of the driving pin 55 with one of the radial slots 54 turns the star wheel one quarter of a revolution. The star wheel 51 is provided on its edge with notches 56 which are engaged during each period of rest of the star wheel 51 by a locking pin 57 carried in the end of a lever 58 which is pivoted at 59 to a fixed part of the machine.

The lever 58 carries a cam roll 60 which runs in a cam groove 61 on the side of the disk wheel 49. The cam roll 60 is held against the inner side of the cam groove 61 by means of a spiral spring 62 which connects one end of the lever 58 with the casing 37. The spring 62 serves to take up any lost motion which might occur in any part of the cam groove 61, but the cam groove is positive in its action and serves to rock the lever 58 in both directions, for the purpose of carrying the locking pin 57 into and out of the notches 56. The action of the driving pin 55 in imparting an intermittent motion to the star wheel 51 and the action of the cam groove 61 in raising and lowering the locking pin 57 are so timed that the locking pin will be carried out of one of the notches 56 during the movement of the star wheel and will be inserted in one of the notches 56 during its period of rest.

In order to insure the certain operation of the star wheel when it is moved at a high rate of speed, I make the outer ends of each of the radial slots 54 slightly curved, as shown at 63, Fig. 8, the curvature being concentric with and corresponding to the path of the driving pin 55 as the latter enters the edge of the star wheel. During the passage of the driving pin 55 through the curved section 63 of the radial slots no motion will be imparted to the star wheel, but the driving pin 55 will then serve to lock the star wheel from movement and allow cam groove 61 to complete the removal of the locking pin 57 from one of the notches 56. The driving pin 55 and the locking pin 57 are therefore both in engagement with the star wheel during the time in which the outer movement of the locking pin overlaps the inward movement of the driving pin. This allows the star wheel to be rotated with great rapidity without interfering with the certain and accurate operation of the driving and locking pins.

That portion of the periphery of the star wheel 51, between each of the notches 56, and that radial slot 54 which precedes the

notch as the star wheel is rotated in the direction of the arrow 64, is made slightly eccentric to the axis of the star wheel by gradually reducing the diameter of that portion of the periphery of the star wheel approaching the notch 56, as shown at 65, Fig. 8, in which a broken line 66 concentric with the axis of the star wheel discloses the eccentricity of the periphery 65.

The eccentricity of the portion 65 of the periphery of the star wheel provides for the gradual depression of the locking pin 57, so that by the time it reaches one of the notches 56 it will have been depressed sufficiently to contact with the side wall 67 of the notch 56, thereby rendering the stopping of the star wheel certain at a predetermined point in its rotation, and at the same time rendering the action of the cam slot 61 less abrupt.

By my improved construction of the star wheel with the overlapping action of the locking and driving pins, I am able to increase the speed of the star wheel during its period of movement, and thereby reduce the period of its movement relatively to its period of rest.

By reducing the time in which it is necessary to move the film and increasing the period of rest, I am able to correspondingly reduce the period in which the light is cut off from the film, and thereby increase the illumination of the picture thrown upon the screen, and at the same time improving the quality of the illumination by decreasing the flickering effect of the light upon the screen.

A fire screen 76 is arranged to fall by gravity between the film and the source of light and is raised whenever the film acquires its required speed by its connection with a centrifugal governor 76ª which is operatively connected with the shaft 47 in the usual manner of apparatus of this class. The film is illuminated from any suitable source of light arranged to shine upon the film through an opening 77, Fig. 5, in a plate 78 attached to a spindle 79 capable of sliding longitudinally in a fixed bearing 80, which is supported upon a bracket 81 resting upon the table 1. The plate 78 is held in ways in the plate 32 to provide a sliding connection between the two plates. The plate 32 is attached to spindles 82 and 83 which are capable of sliding longitudinally in the casing 37. Attached to the plate 32 is a rod 84 having its inner end bent at right angles and entering a slot 85 in a lever 86, pivotally supported at its lower end and provided with a handle 87 at its upper end, on which is a sliding sleeve 88, provided with a knob 89 by which the sleeve 88 may be raised and lowered on the handle 87. When the parts of the apparatus are in their operative position, as shown in Fig. 8, the sleeve 88 is depressed to bring its tip against the front edge of the plate 38 and hold the plate 32 in its operative position, as shown in Fig. 5. Whenever it is desired to insert the film in the apparatus the sleeve 88 is raised, thereby releasing the lever 86 and the handle 87 is moved rearwardly into the position shown in Fig. 6. The connection between the plate 32 and the lever 86 by means of the rod 84 causes the plate 32 to be moved rearwardly into the position shown in Fig. 6, affording sufficient space for the film to be carried beneath the sprocket wheel 28 and in front of the plate 32, and between the sprocket wheel 33 and the loosely journaled roll 34.

When the film has been placed in position the handle 87 is moved forward, bringing the lever 86 and plate 32 into the position shown in Fig. 5, when the parts are again locked in position by the depression of the sleeve 88.

By means of my improved film actuating mechanism by which I secure absolute accuracy of the intermittent movement, I am able to greatly reduce the period of movement of the film relative to its period of rest. By experiment I have found it possible to successfully operate the apparatus with the film movement from one ninth to one tenth the period of its rest, while hitherto so far as I am aware, the period of movement has not been less than one fourth or one fifth of the period of rest, and in many machines not less than one third. By decreasing the relative period of movement I am enabled to make the actual movement of the film much slower and thereby obviate the accelerated movements of the objects on the screen, rendering them more deliberate and in accordance with the natural movements of the objects in life.

I claim,

1. In an apparatus of the class described, a film actuating mechanism comprising a continuously rotating driving shaft provided with a disk carrying a driving pin, a driven shaft carrying a star wheel having equidistant radial slots, with the entrance to each of said slots curved to correspond with the curvature of the path of said driving pin, whereby the driving pin will lock said star wheel from rotation during the passage of the driving pin through the curved portion of each slot.

2. In an apparatus of the class described, an actuating mechanism for imparting an intermittent motion to a film comprising sprocket wheels for engaging the film, a shaft carrying said sprocket wheels, a star wheel on said shaft consisting of a disk divided into sections by equidistant slots, having the inner portion of said slots arranged radially to the axis of said shaft, and with the outer portions of said slots curved tangentially to said radial portions, a driving

shaft, and a driving pin parallel with the axis of said driving shaft and carried thereby in a circular path concentric with one of the curved sections of said slots when said star wheel is at rest.

3. In an apparatus of the class described, mechanism for imparting an intermittent motion to a film, comprising a continuously rotating driving pin, a star wheel driven by said pin and consisting of a disk provided with equidistant radial slots communicating at their outer ends with curved slots, means for locking said star wheel between its periods of movement, said driving pin moving in a path concentric with one of the curved slots of said star wheel when the latter is at rest.

4. In an apparatus of the class described, a mechanism for imparting an intermittent motion to a film, comprising a star wheel having a series of radial slots communicating at their outer ends with curved slots, a continuously rotating shaft, a driving pin carried by said shaft and arranged to pass successively through each of said curved radial slots, whereby said star wheel is locked from movement while the driving pin is passing through the curved slots, but moved during the passage of said pin through said radial slots.

5. In an apparatus of the class described, mechanism for imparting an intermittent motion to a film, comprising sprocket wheels for engaging the film, a shaft carrying said sprocket wheels, a star wheel carried by said shaft, means for imparting an intermittent motion to said star wheel, and means for locking said wheel between its movements, comprising two pins engaging the periphery of said star wheel with the period of engagement of one of said pins overlapping the period of engagement of the other of said pins.

6. In an apparatus of the class described, the combination with a mechanism for imparting an intermittent motion to a film, of mechanism for locking the film from movement, comprising a wheel having a curved slot in its periphery, means for carrying a pin through said curved slot in a circular path concentric with the curvature of the slot, a notch in the periphery of said wheel, means for carrying a locking pin into said notch while the first named pin is in said curved slot.

7. In an apparatus of the class described, a locking mechanism for holding a film from movement, comprising a notched wheel, a locking pin, means for carrying said locking pin periodically into said notch, a radial slot in said notched wheel having its outer end curved, a second pin, and means for moving said second pin into said curved end in a path concentric with its curvature during the engagement of said notch by said locking pin.

8. In an apparatus of the class described, a mechanism for actuating a film intermittently, comprising a wheel having radial slots, said slots having at their outer ends curved sections, a driving pin, means for moving said driving pin in a circular path through said curved sections into and out of said radial slots, notches in the periphery of said wheel, a locking pin and means for moving said locking pin into one of said notches while the driving pin is passing out of the curved section of a slot, and withdrawing said locking pin from a notch while said driving pin is passing into the curved section of a slot.

9. In an apparatus of the class described, a mechanism for imparting an intermittent movement to a film, of means for holding the film at rest between its movements, comprising a wheel having a series of notches in its periphery, with the portions of the periphery immediately in advance of said notches eccentric, a locking pin, and means for carrying said locking pin into said notch by gradual movement as the locking pin passes over the eccentric portion of the periphery.

THOMAS H. BLAIR.

Witnesses:
PENELOPE COMBERBACH,
NELLIE WHALEN,

1034

S. H. HALL.

DRIVE FOR MACHINERY.

APPLICATION FILED DEC. 21, 1912.

1,186,982.

Patented June 13, 1916.

2 SHEETS—SHEET 1.

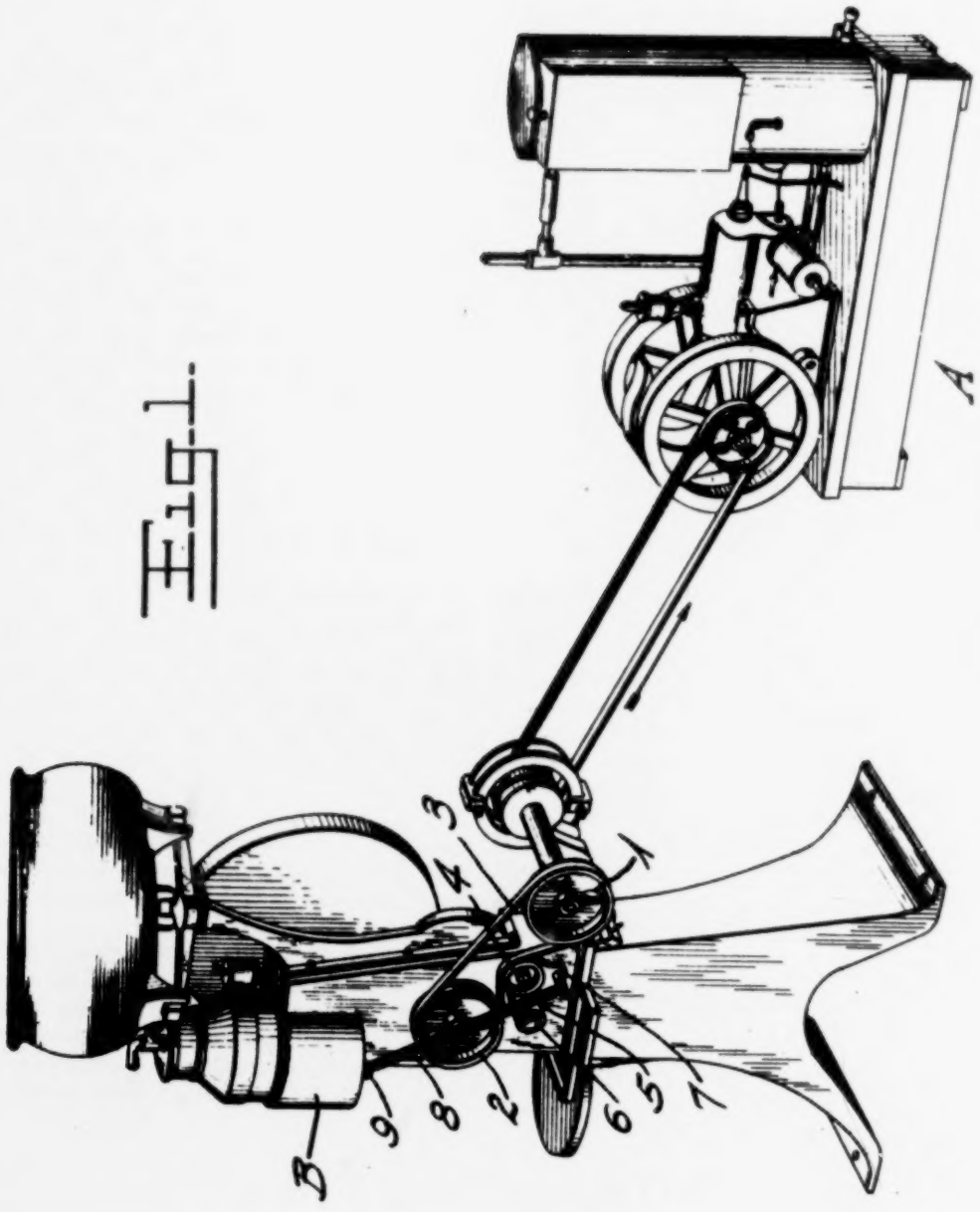

Fig. 1.

S. H. HALL Inventor

DRIVE FOR MACHINERY.

APPLICATION FILED DEC. 21, 1912.

1,186,982.

Patented June 13, 1916.

2 SHEETS—SHEET 1.

Fig. 1.

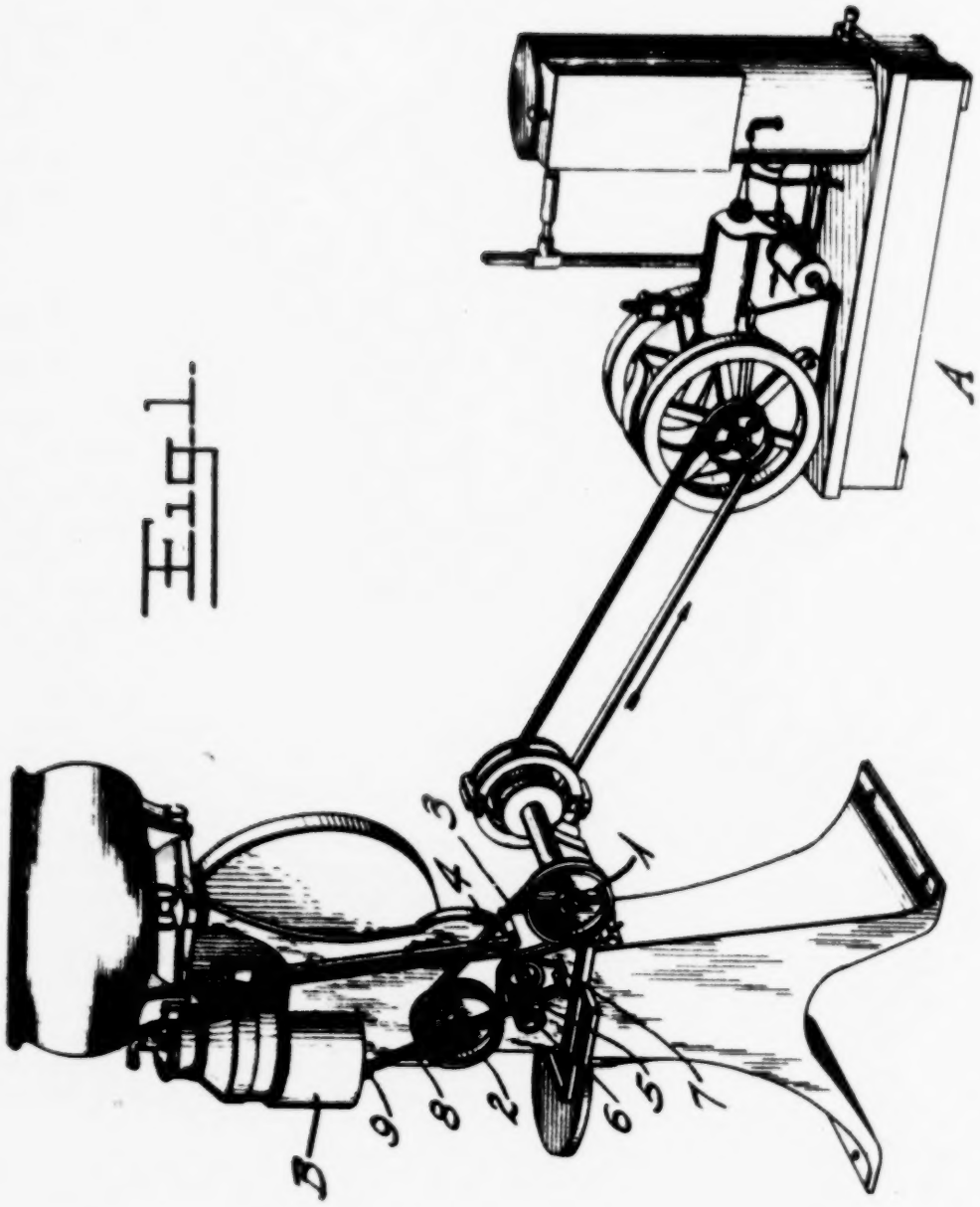

Inventor

S. H. HALL

By their Attorneys

Bartlett & Brownell.

1036

S. H. HALL.

DRIVE FOR MACHINERY.

APPLICATION FILED DEC. 21, 1912.

1,186,982.

Patented June 13, 1916.

2 SHEETS—SHEET 2.

Fig. 2.

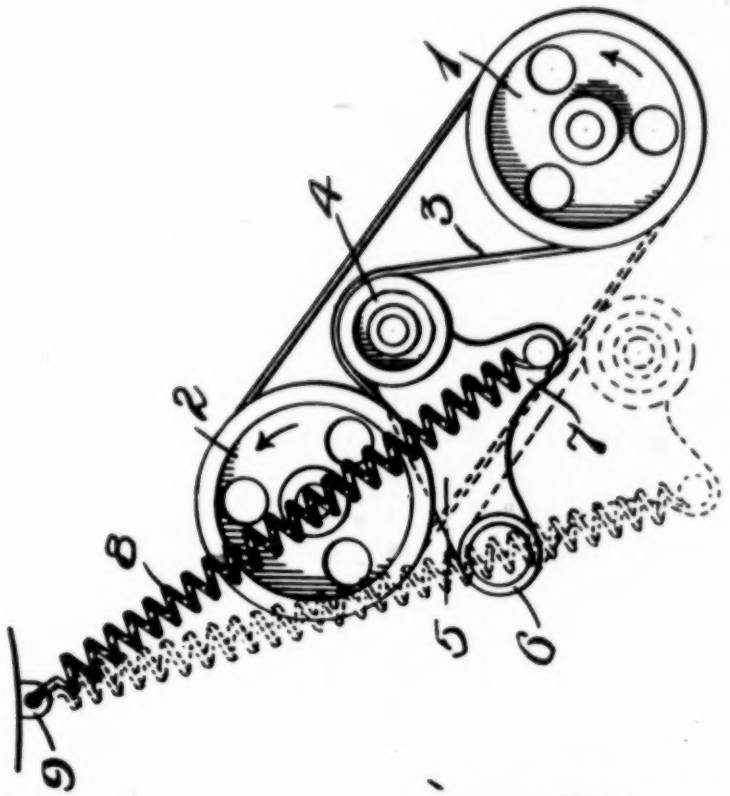

Fig. 3.

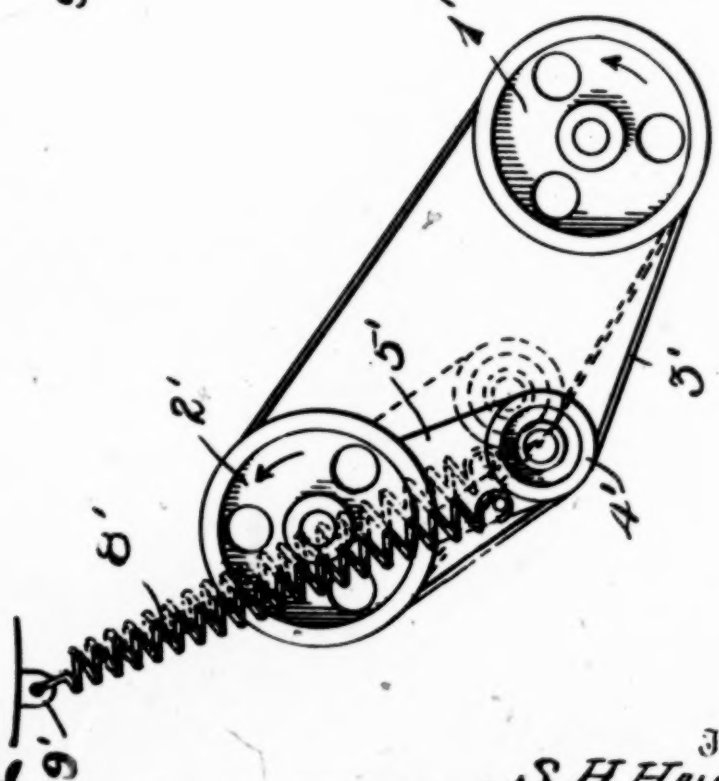

Witnesses:

Inventor

S. H. Hall,

UNITED STATES PATENT OFFICE.

SELDEN H. HALL, OF POUGHKEEPSIE, NEW YORK, ASSIGNOR TO THE DE LAVAL SEPARATOR COMPANY, OF NEW YORK, N. Y., A CORPORATION OF NEW JERSEY.

DRIVE FOR MACHINERY.

1,186,982. Specification of Letters Patent. Patented June 13, 1916.

Application filed December 21, 1912. Serial No. 737,982.

To all whom it may concern:

Be it known that I, SELDEN H. HALL, a citizen of the United States, residing at Poughkeepsie, Dutchess county, State of New York, have invented certain new and useful Improvements in Drives for Machinery, of which the following is a full, clear, and exact description.

My invention relates to improvements in drives for machinery and has for its object to produce a drive which will automatically prevent such shocks for machines, for instance, cream separators, liable to be injured by sudden harmful shocks such as those from a gas engine having a light fly wheel.

In carrying out my invention, I make use of a yielding idler acting upon an otherwise loose driving belt. Idlers acting upon driving belts have heretofore been used so as to make contact with the slack side of the belt. With the idler in this position, if a sudden increase occurs in the speed of the pulley driving the belt, the working part of the belt will become more taut and the slack side will become longer. This will allow the idler to move inward and increase the length of contact with the pulleys and make it more difficult for the belt to slip. Inasmuch as with such an arrangement the driving side of the belt does not give to any considerable extent, and the slipping on the pulleys, if anything, lessened, the sudden increase of the speed of driving pulley imparts a shock to the machinery. Idlers have also been used on the tight side of belts, but not in such a manner as to automatically produce a substantially uniform belt tension.

In carrying out my invention, I place a yielding idler so that it contacts with the tight or working side of the belt. When in this position, a sudden increase in speed of the driving pulley will force the idler to yield so as to loosen the belt and prevent a sudden corresponding increase in belt tension, thereby lessening the shock due to the resulting strain upon the tight side of the belt. When the idler contacts with the outer surface of the tight side of the belt an tight side, decreases the surfaces over which the belt makes contact with the pulleys. At the same time, the slack side having become more slack will further decrease the arcs of contact, such decreases permitting the belt to slip more easily and to relieve the driven machine to a greater degree from shocks due to irregular speed of the driving pulley than was the case in connection with idlers making contact with the slack side. In carrying out my invention I preferably also mount the idler on a lever so disposed that as the belt straightens, the effective lever arm on which the belt acts increases. If a spring or the like is used to keep the idler in contact with the belt, I preferably so connect it that the lever arm on which it acts decreases as the belt straightens.

The following is a description of an embodiment of my invention, reference being had to the accompanying drawings, in which,

Figure 1 shows a perspective view of an embodiment of my invention. Fig. 2 shows in side elevation an enlarged detail of the preferred embodiment of my drive; and, Fig. 3 shows in side elevation a modification of the same.

Referring more particularly to the drawings, 1 is a driving pulley which may be considered to be directly connected to a prime mover such as a gas engine A. 2 is the driven pulley of a machine such as a cream separator B. 3 is a belt running upon said pulleys so that power is transmitted through it from the pulley 1 to the pulley 2. The direction of rotation of pulleys 1 and 2 is counterclockwise, as shown by the arrows.

4 is an idler carried by a frame 5, pivotally mounted on a bearing 6. This bearing is so located that if the belt 3 were straight on both sides, it would be without the area bounded by the belt. The arm 5 is provided with a projection 7, to which is connected one end of a spring 8, the other end of said spring being connected to an anchorage 9. The projection 7 is preferably located a little nearer the axis on the idler 4 than it is to the axis of the bearing

APPLICATION FILED DEC. 21, 1912.

1,186,982.

Patented June 13, 1916.

2 SHEETS—SHEET 2.

Fig. 2.

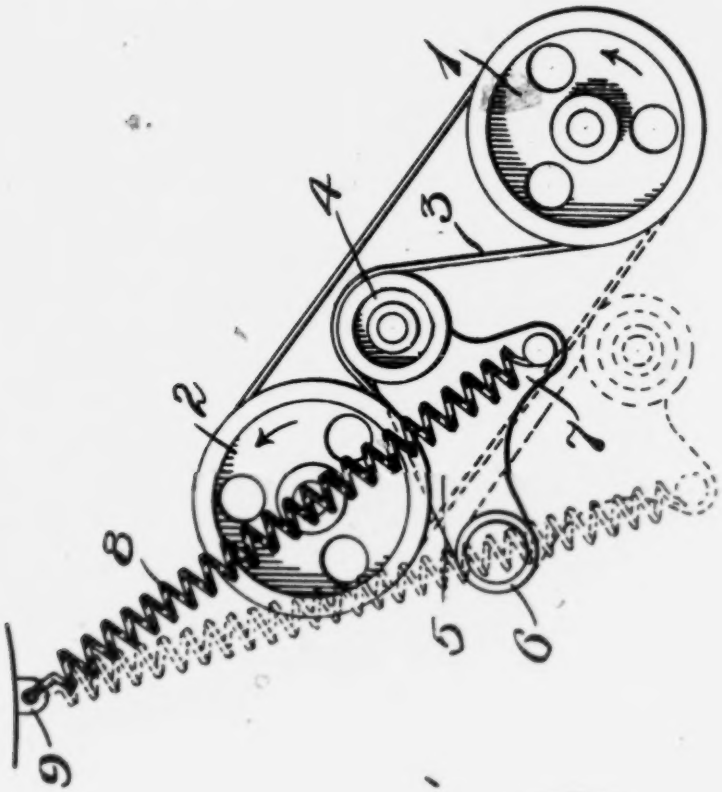

Fig. 3.

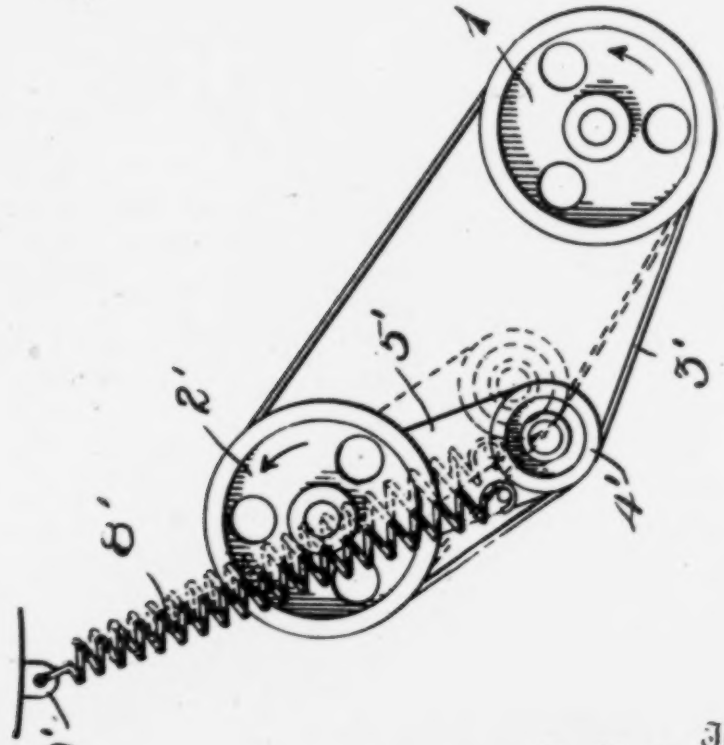

Witnesses:
Chas. A. Peard
Ida M. Hungerford

Inventor
S. H. Hall
By his Attorneys
Bartlett, Brownell & Mitchell

UNITED STATES PATENT OFFICE.

SELDEN H. HALL, OF POUGHKEEPSIE, NEW YORK, ASSIGNOR TO THE DE LAVAL SEPARATOR COMPANY, OF NEW YORK, N. Y., A CORPORATION OF NEW JERSEY.

DRIVE FOR MACHINERY.

1,186,982. Specification of Letters Patent. Patented June 13, 1916.

Application filed December 21, 1912. Serial No. 737,982.

To all whom it may concern:

Be it known that I, SELDEN H. HALL, a citizen of the United States, residing at Poughkeepsie, Dutchess county, State of New York, have invented certain new and useful Improvements in Drives for Machinery, of which the following is a full, clear, and exact description.

My invention relates to improvements in drives for machinery and has for its object to produce a drive which will automatically prevent such shocks for machines, for instance, cream separators, liable to be injured by sudden harmful shocks such as those from a gas engine having a light fly wheel.

In carrying out my invention, I make use of a yielding idler acting upon an otherwise loose driving belt. Idlers acting upon driving belts have heretofore been used so as to make contact with the slack side of the belt. With the idler in this position, if a sudden increase occurs in the speed of the pulley driving the belt, the working part of the belt will become more taut and the slack side will become longer. This will allow the idler to move inward and increase the length of contact with the pulleys and make it more difficult for the belt to slip. Inasmuch as with such an arrangement the driving side of the belt does not give to any considerable extent, and the slipping on the pulleys, if anything, lessened, the sudden increase of the speed of driving pulley imparts a shock to the machinery. Idlers have also been used on the tight side of belts, but not in such a manner as to automatically produce a substantially uniform belt tension.

In carrying out my invention, I place a yielding idler so that it contacts with the tight or working side of the belt. When in this position, a sudden increase in speed of the driving pulley will force the idler to yield so as to loosen the belt and prevent a sudden corresponding increase in belt tension, thereby lessening the shock due to the resulting strain upon the tight side of the belt. When the idler contacts with the outer surface of the tight side of the belt an increase in speed not only causes the idler to move so as to result in reducing the shock transmitted through the tight side, but also, on account of the straightening out of the tight side, decreases the surfaces over which the belt makes contact with the pulleys. At the same time, the slack side having become more slack will further decrease the arcs of contact, such decreases permitting the belt to slip more easily and to relieve the driven machine to a greater degree from shocks due to irregular speed of the driving pulley than was the case in connection with idlers making contact with the slack side. In carrying out my invention I preferably also mount the idler on a lever so disposed that as the belt straightens, the effective lever arm on which the belt acts increases. If a spring or the like is used to keep the idler in contact with the belt, I preferably so connect it that the lever arm on which it acts decreases as the belt straightens.

The following is a description of an embodiment of my invention, reference being had to the accompanying drawings, in which,

Figure 1 shows a perspective view of an embodiment of my invention. Fig. 2 shows in side elevation an enlarged detail of the preferred embodiment of my drive; and, Fig. 3 shows in side elevation a modification of the same.

Referring more particularly to the drawings, 1 is a driving pulley which may be considered to be directly connected to a prime mover such as a gas engine A. 2 is the driven pulley of a machine such as a cream separator B. 3 is a belt running upon said pulleys so that power is transmitted through it from the pulley 1 to the pulley 2. The direction of rotation of pulleys 1 and 2 is counterclockwise, as shown by the arrows.

4 is an idler carried by a frame 5, pivotally mounted on a bearing 6. This bearing is so located that if the belt 3 were straight on both sides, it would be without the area bounded by the belt. The arm 5 is provided with a projection 7, to which is connected one end of a spring 8, the other end of said spring being connected to an anchorage 9. The projection 7 is preferably located a little nearer the axis on the idler 4 than it is to the axis of the bearing 6 and, with the parts in the positions shown in full lines, is on the opposite side of the arm 5 from the anchorage 9. With this arrangement, a tightening of the belt causes

the idler to move so as to tend to bring the end of the projection 7 to that side of the journal 6 which is opposite the anchorage 9; that is, to move the frame 5 to a point where the action of the spring 8 will be on a dead center. The parts are so proportioned that if the belt 3 were straight on both sides, this dead center condition would be produced as shown in dots. It is obvious, however, that in practice the belt would never be so tight as to be straight.

In the form shown in Fig. 1, a sudden increase in the speed of the pulley 1 causes the lower or tight side of the belt 3 to straighten, moving the idler 4 downward, thus relieving somewhat the shock due to the sudden increase in speed, and also permitting the loose side of the belt to become still more loose, so that it is more likely to slip upon the pulleys 1 and 2. Again, when the belt stretches, the idler will move to take it up. Since such movement will result in an increase in the effective lever arm on which the spring 8 acts, and a decrease in the effective lever arm on which the belt 3 acts through the idler to oppose the spring, with the result that when a proper constant spring is used, there will be a nearly uniform tension in the working side of the belt throughout substantially the whole possible range of variations in the length of the working side. When the working side is substantially straight the lever arm on which the spring works is substantially zero, so that the idler exerts but little force upon the belt while during the straightening of the belt the lever arm on which the belt acts has been steadily increasing.

In the modification shown in Fig. 2, the arm 5′ carrying the idler 4′ is mounted so as to move about the axis of the driven pulley 2′, the spring 8′ being connected to the anchorage 9′ in such a manner that, if the belt were straight, the effective lever would be substantially on a dead center. With this arrangement, the idler 4′ makes contact with the inside of the tight side of the belt as shown, and when the driving speed increases suddenly, is moved upward by the straightening of the tight side of the belt. During such straightening of the belt the lever arm on which the belt acts has been increasing and the lever arm on which the spring acts has been decreasing. This straightening loosens the belt, relieves the initial shock and accomplishes some of the advantages of my invention in its preferred form.

As will be evident to those skilled in the art, my invention permits of various other modifications without departing from the spirit thereof or the scope of the appended

ing machinery drive, the combination of a driving pulley, a driven pulley, a belt loosely connecting said pulleys, a movably mounted idler adapted to make contact with the tight side only of the belt, a frame carrying said idler, a spring adapted to move said frame so as to maintain said idler in yielding engagement with said tight side and automatically permit said belt to loosen upon sudden increase in the speed of the driving pulley so as to slip, a driven apparatus and a prime mover so related to the driven apparatus as to make slipping of the belt desirable upon sudden increase in speed of the prime mover.

2. In an automatic belt-tension regulating machinery drive, the combination of a driving pulley, a driven pulley, a belt loosely connecting said pulleys, a movably mounted idler adapted to make contact with the tight side only of the belt, a frame carrying said idler, a spring adapted to move said frame so as to maintain said idler in yielding engagement with said tight side and automatically permit said belt to loosen upon sudden increase in the speed of the driving pulley so as to slip, and a shock producing prime mover.

3. In an automatic belt-tension regulating machinery drive, the combination of a driving pulley, a driven pulley, a belt loosely connecting said pulleys, a movably mounted idler adapted to make contact with the tight side only of the belt, a frame carrying said idler, a spring adapted to move said frame so as to maintain said idler in yielding engagement with said tight side and automatically permit said belt to loosen upon sudden increase in the speed of the driving pulley so as to slip, a shock producing prime mover, and a driven apparatus which should not be subjected to sudden shocks.

4. In an automatic belt-tension regulating machinery drive, the combination of a driven pulley, a driving pulley, a belt connecting said pulleys, a movably mounted idler engaging the tight side only of said belt, a pivoted lever carrying said idler and free to automatically yield to permit said tight side to straighten, the fulcrum of said lever being so located that as the tight side of the belt straightens the effective lever arm of the lever carrying the idler on which the belt acts increases.

5. In an automatic belt-tension regulating machinery drive, the combination of a driven pulley, a driving pulley, a belt connecting said pulleys, a movably mounted idler engaging the tight side only of said belt, a pivoted lever carrying said idler, the fulcrum of said lever being so located that

means acting on said lever for holding said idler in automatically yielding engagement with said belt.

6. In an automatic belt-tension regulating machinery drive, the combination of a driven pulley, a driving pulley, a belt connecting said pulleys, a movably mounted idler engaging the tight side only of said belt, a pivoted lever carrying said idler, the fulcrum of said lever being so located that as the tight side of the belt straightens the effective lever arm of the lever carrying the idler on which the belt acts increases, and means acting on said lever for holding said idler in automatically yielding engagement with said belt, the effective lever arm on which said means acts decreasing as the effective lever arm on which the belt acts increases.

7. In an automatic belt-tension regulating machinery drive, the combination of a driven pulley, a driving pulley, a belt connecting said pulleys, a movably mounted idler engaging the tight side only of said belt, a pivoted lever carrying said idler, the fulcrum of said lever being so located that as the tight side of the belt straightens the effective lever arm of the lever carrying the idler on which the belt acts increases, and a spring acting on said lever for holding said idler in automatically yielding engagement with said belt.

8. In an automatic belt-tension regulating machinery drive, the combination of a driven pulley, a driving pulley, a belt connecting said pulleys, a movably mounted idler engaging the tight side only of said belt, a pivoted lever carrying said idler, the fulcrum of said lever being so located that as the tight side of the belt straightens the effective lever arm of the lever carrying the idler on which the belt acts increases, and a spring acting on said lever for holding said idler in automatically yielding engagement with said belt, the effective lever arm on which said spring acts decreasing as the effective lever arm on which the belt acts increases.

9. In an automatic belt-tension regulating machinery drive, the combination of a driven pulley, a driving pulley, a belt connecting said pulleys, a movably mounted idler engaging the outer surface of the tight side only of said belt, a pivoted lever carrying said idler, the fulcrum of said lever being so located that as the tight side of the belt straightens the effective lever arm of the lever carrying the idler on which the belt acts increases, and means acting on said lever for holding said idler in automatically yielding engagement with said belt.

10. In an automatic belt-tension regulating machinery drive, the combination of a driven pulley, a driving pulley, a belt connecting said pulleys, a movably mounted idler engaging the outer surface of the tight side only of said belt, a pivoted lever carrying said idler, the fulcrum of said lever being so located that as the tight side of the belt straightens the effective lever arm of the lever carrying the idler on which the belt acts increases, and a spring acting on said lever for holding said idler in automatically yielding engagement with said belt, the effective lever arm on which said spring acts decreasing as the effective lever arm on which the belt acts increases.

11. In an automatic belt-tension regulating machinery drive, the combination of a driven pulley, a driving pulley, a belt connecting said pulleys, a movably mounted idler engaging the tight side only of said belt, a pivoted lever carrying said idler, the fulcrum of said lever being so located that as the tight side of the belt straightens the effective lever arm of the lever carrying the idler on which the belt acts increases, and means acting on said lever for holding said idler in automatically yielding engagement with said belt, the effective lever arm on which said means acts decreasing as the effective lever arm on which the belt acts increases, the fulcrum of said lever being outside the area that would be bounded by said belt if both sides were substantially straight and on the same side of said surface as said idler.

12. In an automatic belt-tension regulating machinery drive, the combination of a driven pulley, a driving pulley, a belt connecting said pulleys, a movably mounted idler engaging the tight side only of said belt, a pivoted lever carrying said idler, the fulcrum of said lever being so located that as the tight side of the belt straightens the effective lever arm of the lever carrying the idler on which the belt acts increases, and means acting on said lever for holding said idler in automatically yielding engagement with said belt, said means acting substantially on a dead center when said tight side is straight.

13. In combination, a cream separator, a driving source therefor, a flexible connection between said separator and driving source, and means engaging the taut side of said flexible connection for absorbing impulses transmitted from said driving source.

14. In combination, a separator, pulsating driving means, a belt connecting said separator and said driving means, and a spring pressed pulley engaging the taut side of said belt to absorb impulses transmitted from said driving means. the general directions of the belt on different sides

end of the projection 7 to that side of the journal 6 which is opposite the anchorage 9; that is, to move the frame 5 to a point where the action of the spring 8 will be on a dead center. The parts are so proportioned that if the belt 3 were straight on both sides, this dead center condition would be produced as shown in dots. It is obvious, however, that in practice the belt would never be so tight as to be straight.

In the form shown in Fig. 1, a sudden increase in the speed of the pulley 1 causes the lower or tight side of the belt 3 to straighten, moving the idler 4 downward, thus relieving somewhat the shock due to the sudden increase in speed, and also permitting the loose side of the belt to become still more loose, so that it is more likely to slip upon the pulleys 1 and 2. Again, when the belt stretches, the idler will move to take it up. Since such movement will result in an increase in the effective lever arm on which the spring 8 acts, and a decrease in the effective lever arm on which the belt 3 acts through the idler to oppose the spring, with the result that when a proper constant spring is used, there will be a nearly uniform tension in the working side of the belt throughout substantially the whole possible range of variations in the length of the working side. When the working side is substantially straight the lever arm on which the spring works is substantially zero, so that the idler exerts but little force upon the belt while during the straightening of the belt the lever arm on which the belt acts has been steadily increasing.

In the modification shown in Fig. 2, the arm 5′ carrying the idler 4′ is mounted so as to move about the axis of the driven pulley 2′, the spring 8′ being connected to the anchorage 9′ in such a manner that, if the belt were straight, the effective lever would be substantially on a dead center. With this arrangement, the idler 4′ makes contact with the inside of the tight side of the belt as shown, and when the driving speed increases suddenly, is moved upward by the straightening of the tight side of the belt. During such straightening of the belt the lever arm on which the belt acts has been increasing and the lever arm on which the spring acts has been decreasing. This straightening loosens the belt, relieves the initial shock and accomplishes some of the advantages of my invention in its preferred form.

As will be evident to those skilled in the art, my invention permits of various other modifications without departing from the spirit thereof or the scope of the appended claims.

What I claim is:

1. In an automatic belt-tension regulating machinery drive, the combination of a driving pulley, a driven pulley, a belt loosely connecting said pulleys, a movably mounted idler adapted to make contact with the tight side only of the belt, a frame carrying said idler, a spring adapted to move said frame so as to maintain said idler in yielding engagement with said tight side and automatically permit said belt to loosen upon sudden increase in the speed of the driving pulley so as to slip, a driven apparatus and a prime mover so related to the driven apparatus as to make slipping of the belt desirable upon sudden increase in speed of the prime mover.

2. In an automatic belt-tension regulating machinery drive, the combination of a driving pulley, a driven pulley, a belt loosely connecting said pulleys, a movably mounted idler adapted to make contact with the tight side only of the belt, a frame carrying said idler, a spring adapted to move said frame so as to maintain said idler in yielding engagement with said tight side and automatically permit said belt to loosen upon sudden increase in the speed of the driving pulley so as to slip, and a shock producing prime mover.

3. In an automatic belt-tension regulating machinery drive, the combination of a driving pulley, a driven pulley, a belt loosely connecting said pulleys, a movably mounted idler adapted to make contact with the tight side only of the belt, a frame carrying said idler, a spring adapted to move said frame so as to maintain said idler in yielding engagement with said tight side and automatically permit said belt to loosen upon sudden increase in the speed of the driving pulley so as to slip, a shock producing prime mover, and a driven apparatus which should not be subjected to sudden shocks.

4. In an automatic belt-tension regulating machinery drive, the combination of a driven pulley, a driving pulley, a belt connecting said pulleys, a movably mounted idler engaging the tight side only of said belt, a pivoted lever carrying said idler and free to automatically yield to permit said tight side to straighten, the fulcrum of said lever being so located that as the tight side of the belt straightens the effective lever arm of the lever carrying the idler on which the belt acts increases.

5. In an automatic belt-tension regulating machinery drive, the combination of a driven pulley, a driving pulley, a belt connecting said pulleys, a movably mounted idler engaging the tight side only of said belt, a pivoted lever carrying said idler, the fulcrum of said lever being so located that as the tight side of the belt straightens the effective lever arm of the lever carrying the idler on which the belt acts increases, and

means acting on said lever for holding said idler in automatically yielding engagement with said belt.

6. In an automatic belt-tension regulating machinery drive, the combination of a driven pulley, a driving pulley, a belt connecting said pulleys, a movably mounted idler engaging the tight side only of said belt, a pivoted lever carrying said idler, the fulcrum of said lever being so located that as the tight side of the belt straightens the effective lever arm of the lever carrying the idler on which the belt acts increases, and means acting on said lever for holding said idler in automatically yielding engagement with said belt, the effective lever arm on which said means acts decreasing as the effective lever arm on which the belt acts increases.

7. In an automatic belt-tension regulating machinery drive, the combination of a driven pulley, a driving pulley, a belt connecting said pulleys, a movably mounted idler engaging the tight side only of said belt, a pivoted lever carrying said idler, the fulcrum of said lever being so located that as the tight side of the belt straightens the effective lever arm of the lever carrying the idler on which the belt acts increases, and a spring acting on said lever for holding said idler in automatically yielding engagement with said belt.

8. In an automatic belt-tension regulating machinery drive, the combination of a driven pulley, a driving pulley, a belt connecting said pulleys, a movably mounted idler engaging the tight side only of said belt, a pivoted lever carrying said idler, the fulcrum of said lever being so located that as the tight side of the belt straightens the effective lever arm of the lever carrying the idler on which the belt acts increases, and a spring acting on said lever for holding said idler in automatically yielding engagement with said belt, the effective lever arm on which said spring acts decreasing as the effective lever arm on which the belt acts increases.

9. In an automatic belt-tension regulating machinery drive, the combination of a driven pulley, a driving pulley, a belt connecting said pulleys, a movably mounted idler engaging the outer surface of the tight side only of said belt, a pivoted lever carrying said idler, the fulcrum of said lever being so located that as the tight side of the belt straightens the effective lever arm of the lever carrying the idler on which the belt acts increases, and means acting on said lever for holding said idler in automatically yielding engagement with said belt.

10. In an automatic belt-tension regulating machinery drive, the combination of a driven pulley, a driving pulley, a belt connecting said pulleys, a movably mounted idler engaging the outer surface of the tight side only of said belt, a pivoted lever carrying said idler, the fulcrum of said lever being so located that as the tight side of the belt straightens the effective lever arm of the lever carrying the idler on which the belt acts increases, and a spring acting on said lever for holding said idler in automatically yielding engagement with said belt, the effective lever arm on which said spring acts decreasing as the effective lever arm on which the belt acts increases.

11. In an automatic belt-tension regulating machinery drive, the combination of a driven pulley, a driving pulley, a belt connecting said pulleys, a movably mounted idler engaging the tight side only of said belt, a pivoted lever carrying said idler, the fulcrum of said lever being so located that as the tight side of the belt straightens the effective lever arm of the lever carrying the idler on which the belt acts increases, and means acting on said lever for holding said idler in automatically yielding engagement with said belt, the effective lever arm on which said means acts decreasing as the effective lever arm on which the belt acts increases, the fulcrum of said lever being outside the area that would be bounded by said belt if both sides were substantially straight and on the same side of said surface as said idler.

12. In an automatic belt-tension regulating machinery drive, the combination of a driven pulley, a driving pulley, a belt connecting said pulleys, a movably mounted idler engaging the tight side only of said belt, a pivoted lever carrying said idler, the fulcrum of said lever being so located that as the tight side of the belt straightens the effective lever arm of the lever carrying the idler on which the belt acts increases, and means acting on said lever for holding said idler in automatically yielding engagement with said belt, said means acting substantially on a dead center when said tight side is straight.

13. In combination, a cream separator, a driving source therefor, a flexible connection between said separator and driving source, and means engaging the taut side of said flexible connection for absorbing impulses transmitted from said driving source.

14. In combination, a separator, pulsating driving means, a belt connecting said separator and said driving means, and a spring pressed pulley engaging the taut side of said belt to absorb impulses transmitted from said driving means, the general directions of the belt on different sides of the point of contact of said belt and pulley being at an angle with respect to each other.

15. In an automatic belt-tension regulating machinery drive, the combination of a

driving pulley, a driven pulley, a belt loosely connecting said pulleys, a movably mounted idler adapted to make contact with the tight side only of the belt, a pivoted frame carrying said idler, a spring adapted to move said frame so as to maintain said idler in yielding engagement with said tight side and automatically permit said belt to loosen upon sudden increase in the speed of the driving pulley so as to slip, said spring being so located that the effective length of the lever on which the spring acts shortens as the side of the belt on which the idler bears straightens, a driven apparatus and a prime mover so related to the driven apparatus as to make slipping of the belt desirable upon sudden increase in speed of the prime mover.

16. The combination of a driving pulley, a driven pulley, a belt loosely connecting said pulleys, a movably mounted idler adapted to make contact with the tight side only of the belt, a frame carrying said idler, a spring adapted to move said frame so as to maintain said idler in yielding engagement with said tight side and automatically permit said belt to loosen upon sudden increase in the speed of the driving pulley so as to slip, a pulsating gas engine and a separator, said gas engine driving said separator through said pulleys and belt.

SELDEN H. HALL.

Witnesses:
JOSEPH J. MAHER,
HARRY C. BADSLIN.

1042

C. E. FRITTS, DEC'D.

J. H. FRITTS, ADMINISTRATRIX.

RECORDING AND REPRODUCTION OF PULSATIONS OR VARIATIONS IN SOUNDS AND OTHER PHENOMENA.

APPLICATION FILED OCT. 22, 1880.

1,203,190.

Patented Oct. 31, 1916.

4 SHEETS—SHEET 1.

Fig. 1.

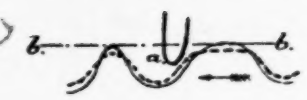

Fig. 2.

Fig. 3.

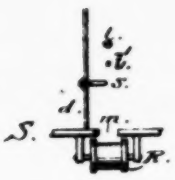

Fig. 4.

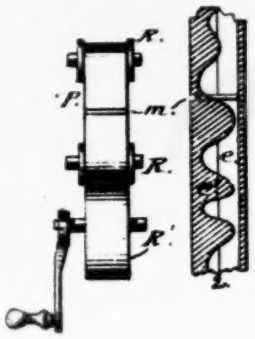

Fig. 5.

Fig. 6.

Fig. 7.

Fig. 8.

Fig. 9.

Fig. 12.

Fig. 13.

Fig. 10.

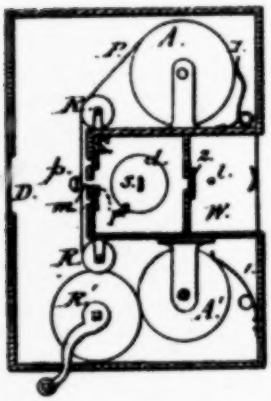

Fig. 11.

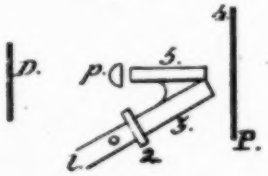

Fig. 14.

Fig. 15.

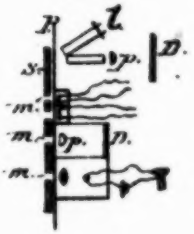

Fig. 16.

Fig. 17.

Fig. 18.

Fig. 19.

Witnesses:

C. L. Wilbur

Inventor:

Charles E. Fritts

J. H. FRITTS, ADMINISTRATRIX.

RECORDING AND REPRODUCTION OF PULSATIONS OR VARIATIONS IN SOUNDS AND OTHER PHENOMENA.

APPLICATION FILED OCT. 22, 1880.

1,203,190.

Patented Oct. 31, 1916.

4 SHEETS—SHEET 1.

Fig. 1.

Fig. 2.

Fig. 3.

Fig. 4.

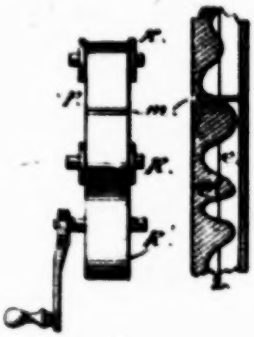

Fig. 5.

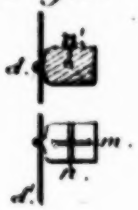

Fig. 6.

Fig. 7.

Fig. 8.

Fig. 9.

Fig. 12.

Fig. 13.

Fig. 10.

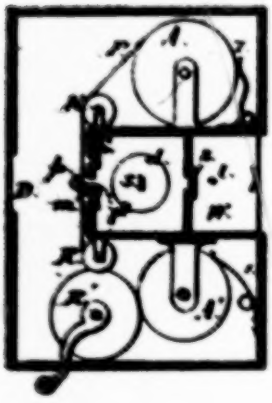

Fig. 11.

Fig. 14.

Fig. 15.

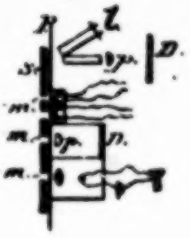

Fig. 16.

Fig. 17.

Fig. 18.

Fig. 19.

Witnesses:

C. L. Wilbur

F. Yerrell

Inventor:

Charles E. Fritts

1044

C. E. FRITTS, DEC'D.

J. H. FRITTS, ADMINISTRATRIX.

RECORDING AND REPRODUCTION OF PULSATIONS OR VARIATIONS IN SOUNDS AND OTHER PHENOMENA.

APPLICATION FILED OCT. 22, 1880.

1,203,190.

Patented Oct. 31, 1916.

4 SHEETS—SHEET 2.

Fig. 20.

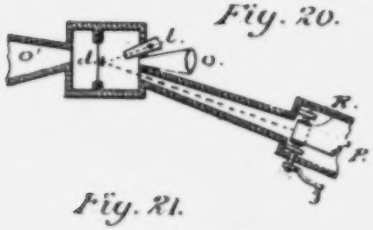

Fig. 30.

Fig. 31.

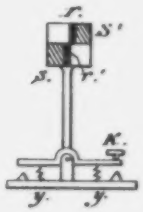

Fig. 32.

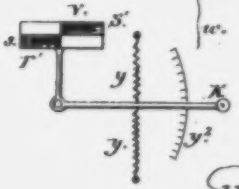

Fig. 21.

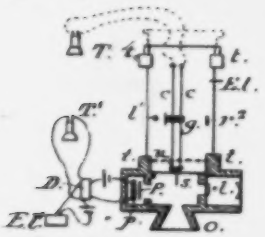

Fig. 33.

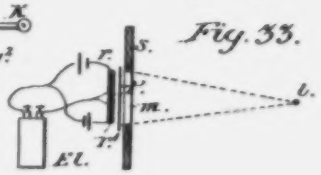

Fig. 22.

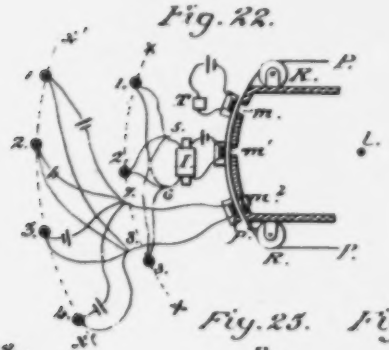

Fig. 34.

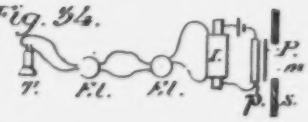

Fig. 35.

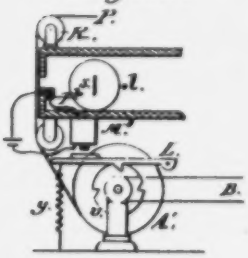

Fig. 23.

Fig. 26.

Fig. 28.

Fig. 27.

Fig. 24.

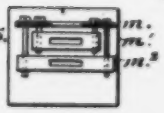

Fig. 36.

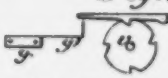

Fig. 29.

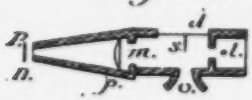

Fig. 37.

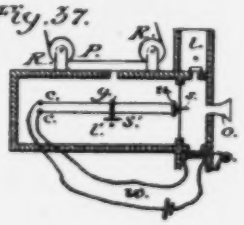

Witnesses:

Inventor:

RECORDING AND REPRODUCTION OF PULSATIONS OR VARIATIONS IN SOUNDS AND OTHER PHENOMENA.

APPLICATION FILED OCT. 22, 1880.

1,203,190.

Patented Oct. 31, 1916.

4 SHEETS—SHEET 2.

Fig. 20.

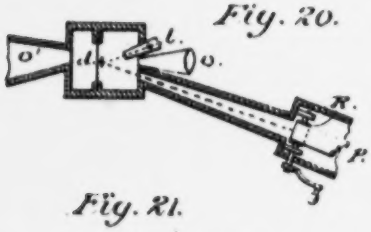

Fig. 21.

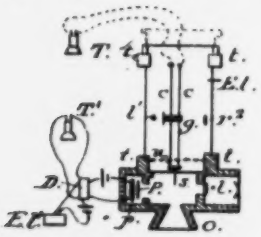

Fig. 22.

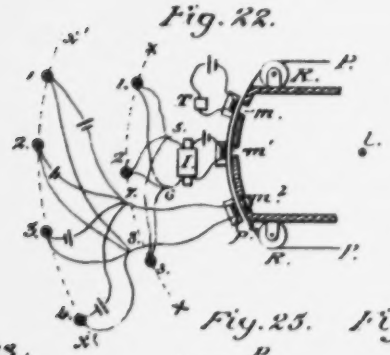

Fig. 23.

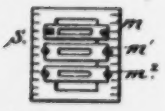

Fig. 24.

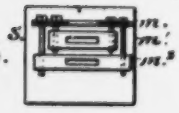

Fig. 29.

Fig. 23.

Fig. 27.

Fig. 26.

Fig. 28.

Fig. 30.

Fig. 32.

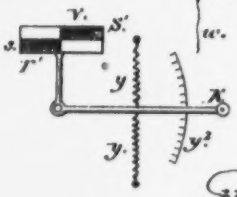

Fig. 31.

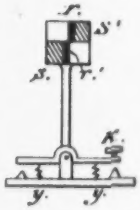

Fig. 33.

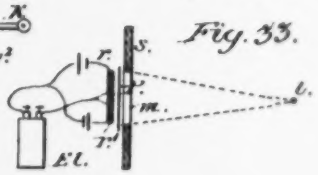

Fig. 34.

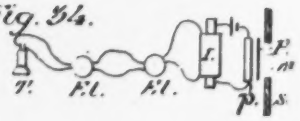

Fig. 35.

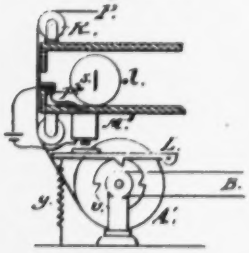

Fig. 36.

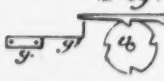

Fig. 37.

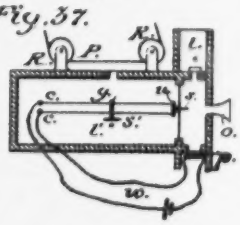

Witnesses:

L. Fritts

J. H. Fritts.

Inventor:

Charles E. Fritts

C. E. FRITTS, DEC'D.

J. H. FRITTS, ADMINISTRATRIX.

RECORDING AND REPRODUCTION OF PULSATIONS OR VARIATIONS IN SOUNDS AND OTHER PHENOMENA.

APPLICATION FILED OCT. 22, 1880.

1,203,190

Patented Oct. 31, 1916.

4 SHEETS—SHEET 3.

Fig. 38.

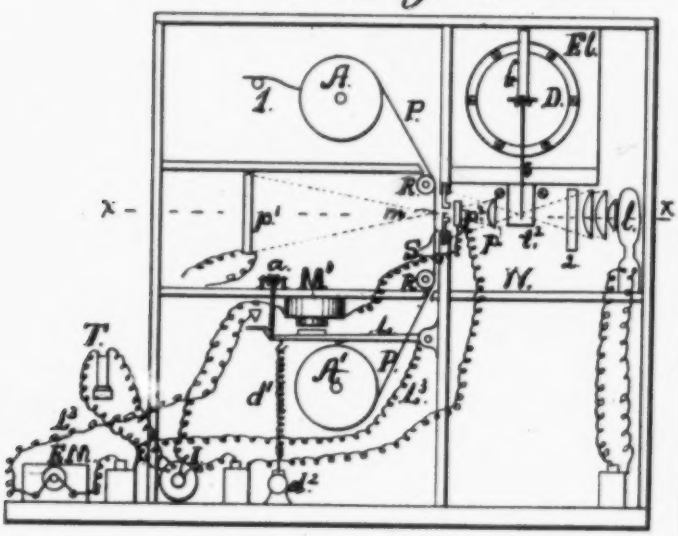

Fig. 40.

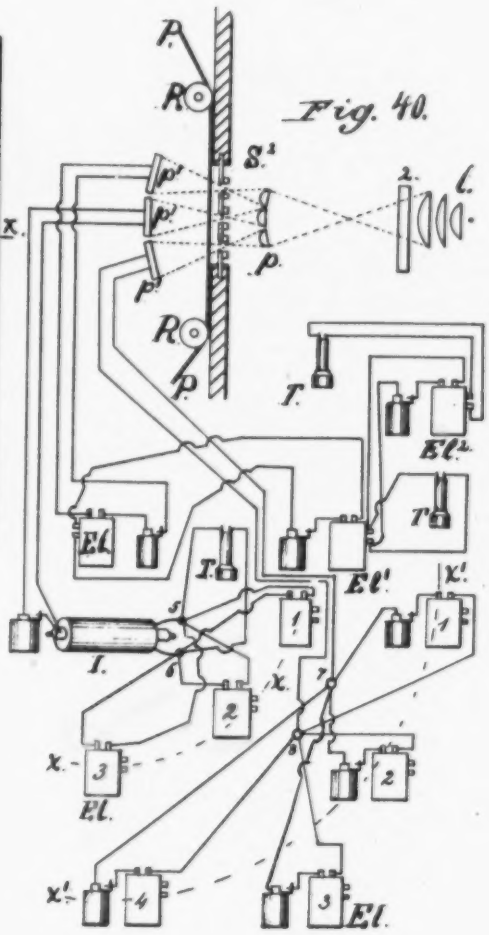

Fig. 39.

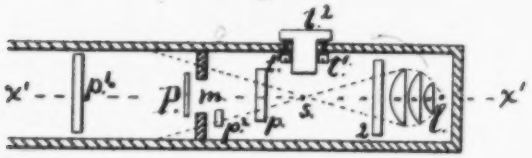

Fig. 43.

Fig. 42.

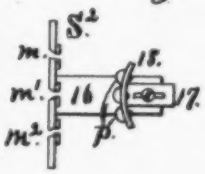

Fig. 41.

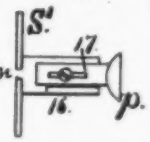

Fig. 45.

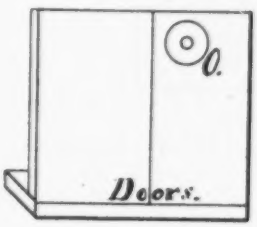

Fig. 44.

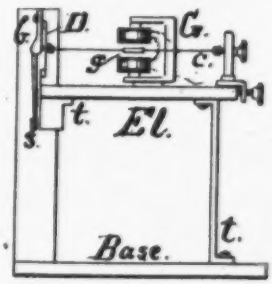

Witnesses;

Inventor;

C. E. FRITTS, DEC'D.

J. H. FRITTS, ADMINISTRATRIX.

RECORDING AND REPRODUCTION OF PULSATIONS OR VARIATIONS IN SOUNDS AND OTHER PHENOMENA.

APPLICATION FILED OCT. 22, 1880.

1,203,190

Patented Oct. 31, 1916.

4 SHEETS—SHEET 3.

Fig. 38.

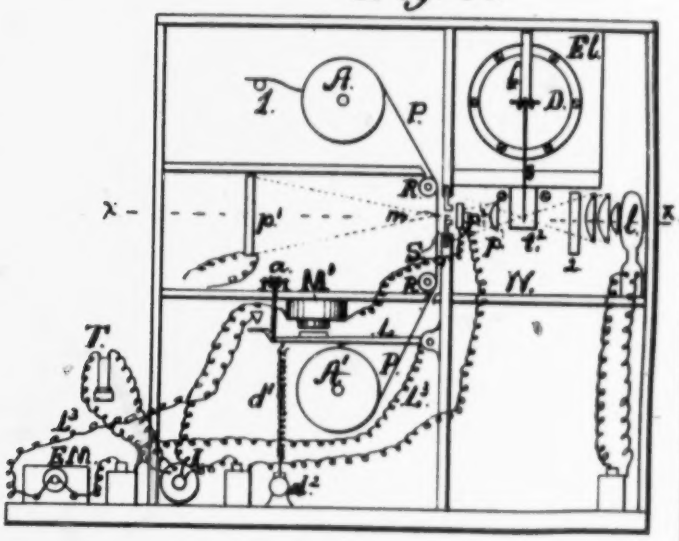

Fig. 40.

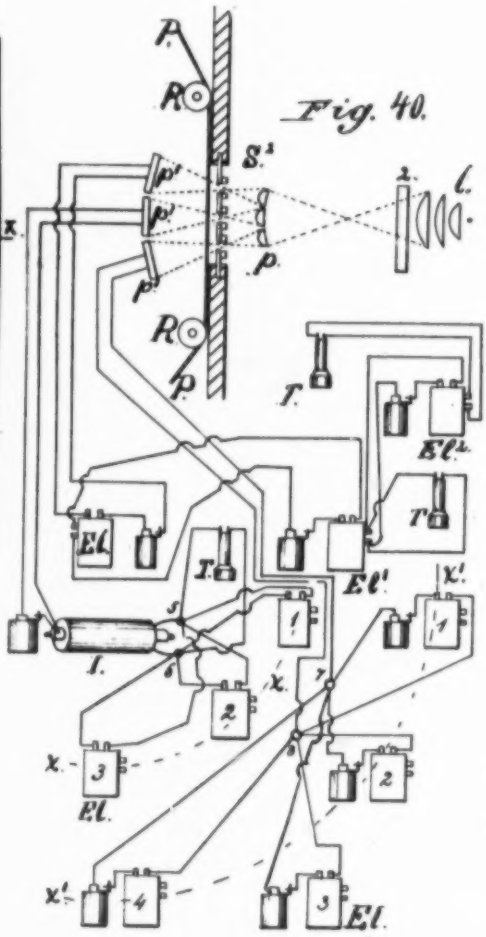

Fig. 39.

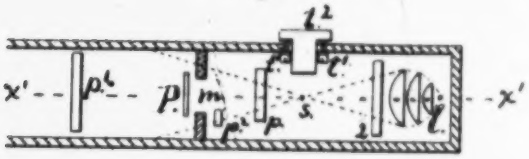

Fig. 43.

Fig. 42.

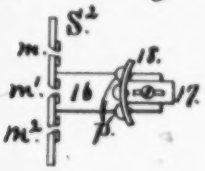

Fig. 41.

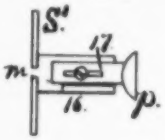

Fig. 45.

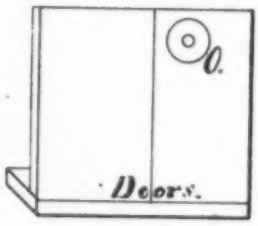

Fig. 44.

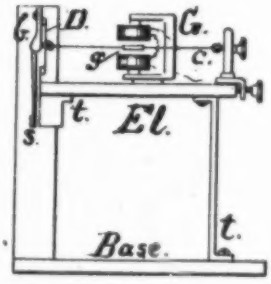

Witnesses:
W. N. Fuller
George Jackson

Inventor:
Chas. E. Fritts

C. E. FRITTS, DEC'D.

J. H. FRITTS, ADMINISTRATRIX.

RECORDING AND REPRODUCTION OF PULSATIONS OR VARIATIONS IN SOUNDS AND OTHER PHENOMENA.

APPLICATION FILED OCT. 22, 1880.

1,203,190.

Patented Oct. 31, 1916.

4 SHEETS—SHEET 4.

Fig. 46.

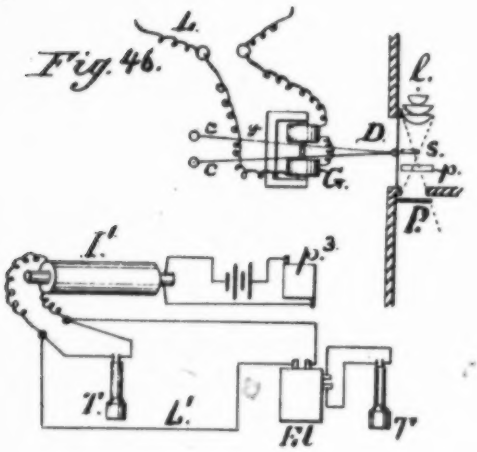

Fig. 47.

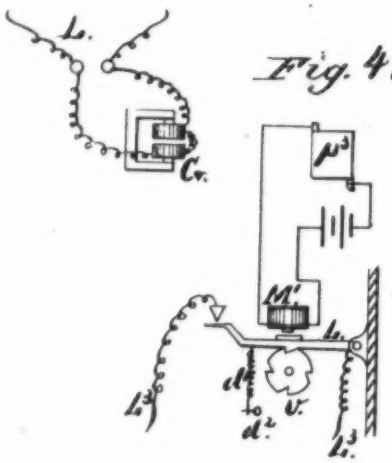

Fig. 48.

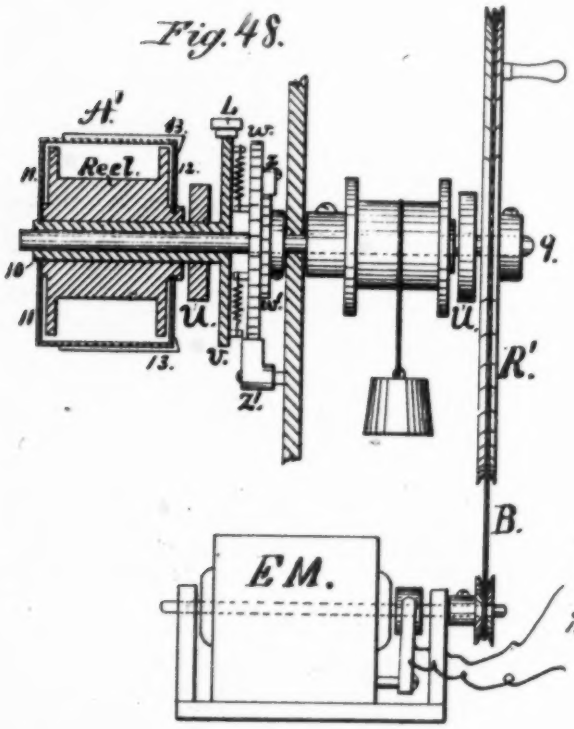

Fig. 44.

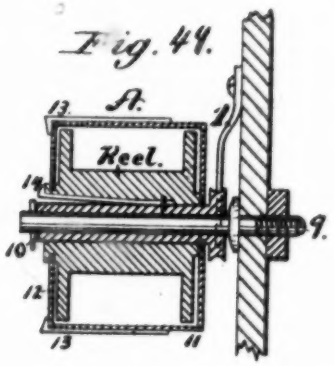

Fig. 51.

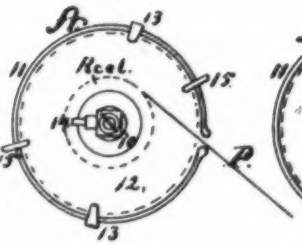

Fig. 50.

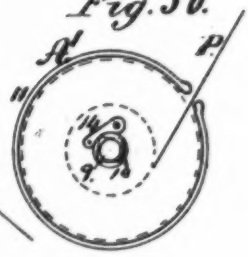

Witnesses;
W. H. Fuller
George Jackson

Inventor;
Chas. E. Fritts

UNITED STATES PATENT OFFICE.

CHARLES EDGAR FRITTS, OF NEW YORK, N. Y.; JOSEPHINE H. FRITTS, ADMINISTRATRIX OF SAID CHARLES EDGAR FRITTS, DECEASED, ASSIGNOR, BY MESNE ASSIGNMENTS, TO JOHN D. MYERS, OF PHILADELPHIA, PENNSYLVANIA.

RECORDING AND REPRODUCTION OF PULSATIONS OR VARIATIONS IN SOUNDS AND OTHER PHENOMENA.

1,203,190. Specification of Letters Patent. Patented Oct. 31, 1916.

Application filed October 22, 1880. Serial No. 19,313.

To all whom it may concern:

Be it known that I, CHARLES EDGAR FRITTS, a citizen of the United States, residing at New York city, in the county of and State of New York, have invented new and useful Improvements in the Recording and Reproduction of Pulsations or Variations in Sounds and other Phenomena, of which the following is a specification.

This invention relates to recording variations or pulsations in sounds, light, or electrical currents, in a permanent or tangible form, and reproducing the same at will, not merely at the instrument alone, but also at any other instrument suitably connected therewith—and not merely in their original forms, but also changed as may be desired.

Several methods of recording are herein explained in order to justify broad claim and any suitable method may be used in connection with the other parts of my system.

The invention as described consists mainly in the application of photography and electricity for recording and reproducing such variations and pulsations by the aid of a diaphragm or equivalent device capable of vibrating under those influences and particularly under the influence of sounds, as hereinafter fully set forth. I have, therefore, termed it a photo-phonographic apparatus.

Apparatus for recording and reproducing sounds, commonly called phonographs, are not new, but they have been very imperfect—the practical difficulties preventing either a perfect record of the sounds or a perfect reproduction of them having been hitherto insurmountable. I have, therefore, sought to dispense as far as possible with mechanical methods and means in dealing with such subtle and intangible phenomena and have devised a new method of procedure and new apparatus for carrying out the same, which I claim in this application, by which I am enabled to exert and control any desirable amount of force for performing the different operations required by properly manipulating imponderable forces by means of devices which have of themselves a minimum force of movement, and obtained, as regards ease, certainty, rapidity, or accuracy, either in recording or reproducing sounds and similar phenomena.

Broadly speaking, my invention is based upon the laws governing the behavior of certain substances when exposed to the action of radiant energy. The action of actinic rays of light upon certain substances producing effects known as photographic need not be explained, as that method of utilizing radiant energy is well known and my invention does not relate to photographic processes, but any suitable or well known processes may be employed in the recording operations of my invention. Another mode of action of radiant energy is in changing electrical resistance, as shown by the action of light upon certain substances, notably selenium, whose electrical conductivity is well known to be greatly increased by exposure to light. Amorphous phosphorus is similarly affected and other substances are known which may be employed in like manner. I utilize this action of radiant energy for suitably controlling and varying electrical currents in different ways, but preferably by arranging the sensitive substance in a current-controlling device of an elongated form in the path of the rays from the source of light, and varying the quantity of light which falls upon it by varying the length of the illuminated portion of it. Having made this conducting substance a part of an electric circuit, and adapted the device to control the intensity and direction of the currents flowing through it, I vary its action upon the currents by means of a suitable device arranged across the path of the beam of light and movable lengthwise of the current-controlling device, whereby it will expose a greater or less length of the current-controller to light, in accordance with its own movements, and, consequently, with the phenomenon or influence which causes its motion. The resistance of a current-controlling device for the purposes of this invention may, however, be conveniently varied in many other ways of which I have herein named several.

A third mode of action of

RECORDING AND REPRODUCTION OF PULSATIONS OR VARIATIONS IN SOUNDS AND OTHER PHENOMENA.

APPLICATION FILED OCT. 22, 1880.

1,203,190.

Patented Oct. 31, 1916.

4 SHEETS—SHEET 4.

Fig. 46.

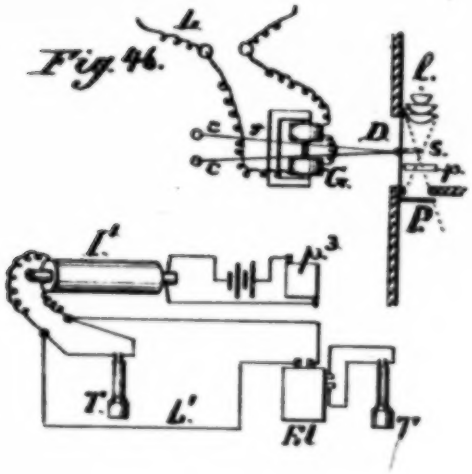

Fig. 47.

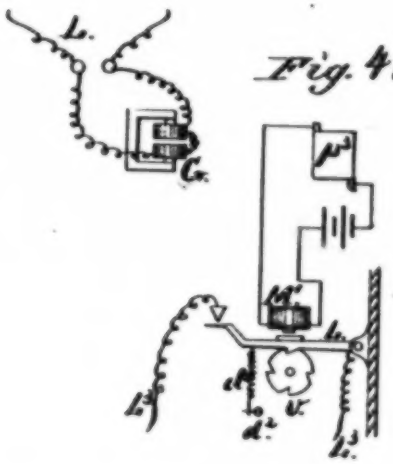

Fig. 48.

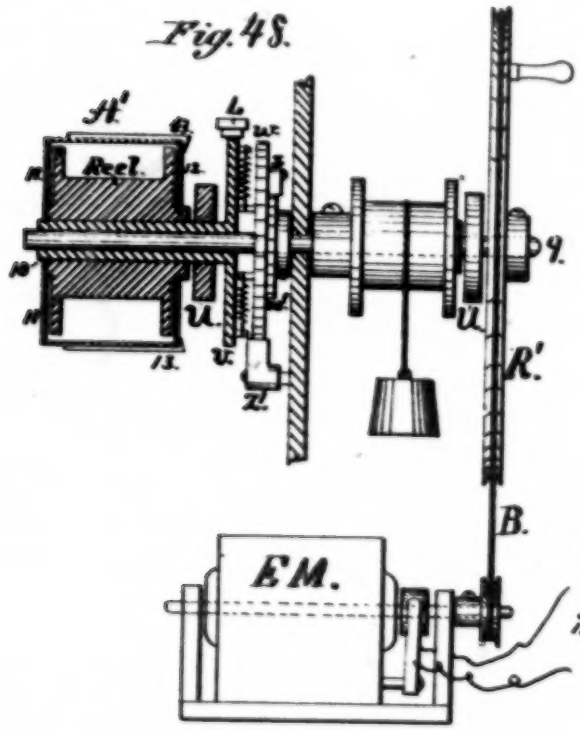

Fig. 49.

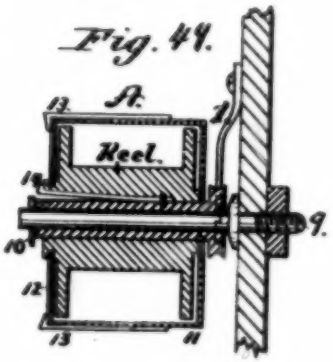

Fig. 51.

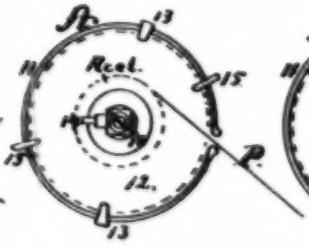

Fig. 50.

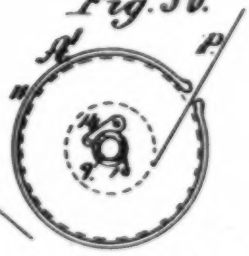

Witnesses;
W. H. Fuller
George Jackson

Inventor;
Chas. E. Fritts

CHARLES EDGAR FRITTS, OF NEW YORK, N. Y.; JOSEPHINE H. FRITTS, ADMINISTRATRIX OF SAID CHARLES EDGAR FRITTS, DECEASED, ASSIGNOR, BY MESNE ASSIGNMENTS, TO JOHN D. MYERS, OF PHILADELPHIA, PENNSYLVANIA.

RECORDING AND REPRODUCTION OF PULSATIONS OR VARIATIONS IN SOUNDS AND OTHER PHENOMENA.

1,203,190. Specification of Letters Patent. Patented Oct. 31, 1916.

Application filed October 22, 1880. Serial No. 19,313.

To all whom it may concern:

Be it known that I, CHARLES EDGAR FRITTS, a citizen of the United States, residing at New York city, in the county of and State of New York, have invented new and useful Improvements in the Recording and Reproduction of Pulsations or Variations in Sounds and other Phenomena, of which the following is a specification.

This invention relates to recording variations or pulsations in sounds, light, or electrical currents, in a permanent or tangible form, and reproducing the same at will, not merely at the instrument alone, but also at any other instrument suitably connected therewith—and not merely in their original forms, but also changed as may be desired.

Several methods of recording are herein explained in order to justify broad claim and any suitable method may be used in connection with the other parts of my system.

The invention as described consists mainly in the application of photography and electricity for recording and reproducing such variations and pulsations by the aid of a diaphragm or equivalent device capable of vibrating under those influences and particularly under the influence of sounds, as hereinafter fully set forth. I have, therefore, termed it a photo-phonographic apparatus.

Apparatus for recording and reproducing sounds, commonly called phonographs, are not new, but they have been very imperfect—the practical difficulties preventing either a perfect record of the sounds or a perfect reproduction of them having been hitherto insurmountable. I have, therefore, sought to dispense as far as possible with mechanical methods and means in dealing with such subtle and intangible phenomena and have devised a new method of procedure and new apparatus for carrying out the same, which I claim in this application, by which I am enabled to exert and control any desirable amount of force for performing the different operations required by properly manipulating imponderable forces by means of devices which have of themselves a minimum force of movement, and which require exceedingly little force to move them. I thus obtain results which so far as I am aware have never before been obtained, as regards ease, certainty, rapidity, or accuracy, either in recording or reproducing sounds and similar phenomena.

Broadly speaking, my invention is based upon the laws governing the behavior of certain substances when exposed to the action of radiant energy. The action of actinic rays of light upon certain substances producing effects known as photographic need not be explained, as that method of utilizing radiant energy is well known and my invention does not relate to photographic processes, but any suitable or well known processes may be employed in the recording operations of my invention. Another mode of action of radiant energy is in changing electrical resistance, as shown by the action of light upon certain substances, notably selenium, whose electrical conductivity is well known to be greatly increased by exposure to light. Amorphous phosphorus is similarly affected and other substances are known which may be employed in like manner. I utilize this action of radiant energy for suitably controlling and varying electrical currents in different ways, but preferably by arranging the sensitive substance in a current-controlling device of an elongated form in the path of the rays from the source of light, and varying the quantity of light which falls upon it by varying the length of the illuminated portion of it. Having made this conducting substance a part of an electric circuit, and adapted the device to control the intensity and direction of the currents flowing through it, I vary its action upon the currents by means of a suitable device arranged across the path of the beam of light and movable lengthwise of the current-controlling device, whereby it will expose a greater or less length of the current-controller to light, in accordance with its own movements, and, consequently, with the phenomenon or influence which causes its motion. The resistance of a current-controlling device for the purposes of this invention may, however, be conveniently varied in many other ways of which I have herein named several.

A third mode of action of radiant energy which I utilize is the action of light upon certain substances, causing them to vibrate, and I have described and illustrated this

part of my invention as being carried out by throwing the light, after being properly manipulated by my devices, upon thin plates adapted to vibrate under the action of varying light and made from suitable materials, especially of hard rubber. This action of radiant energy is believed to be due to the thermal rays of the light, as it is found to be best produced by heat rays acting upon substances which are highly athermanous or absorbent of heat. Any such substance may, of course, be utilized for this part of my process and I have named several which may be substituted for the hard-rubber plates or diaphragms. When the intensity of the light (or thermal rays) is caused to vary in accordance with the pulsations or sound waves constituting a certain sound, and this varying light is thrown upon a suitable substance, that substance is caused to vibrate in accordance with those changes in the actuating force and consequently gives out sound corresponding to those changes or pulsations. As a matter of course, the stronger the actuating influence is, the greater is the effect produced. I also increase the effect by amplifying the recorded variations of the original phenomena when recording them on the negative, as herein fully set forth, and then employ this "negative" for manipulating the light or actuating force before throwing it upon the diaphragm or other sensitive body. Such a negative will, of course, produce more marked and effective variations in the light, and more powerful vibrations in a sensitive substance exposed to its action.

In describing my process, I shall for convenience call the effective force "light", although I am aware that that term is not strictly correct. It is well understood that what is generally known as light is made up of rays or forces having different properties, as, actinic, or chemical, luminous, thermal, and possibly others. Even in the case of the photographic image and the metal selenium used in my process, it is not strictly correct to say that the effects are produced by "light" rays for it is known that they may be produced by rays which are not luminous, although they ordinarily accompany the luminous rays in light. I mean, therefore, by the word "light" both in this specification and in the claims those rays, forces, or forms of energy which produce the effects, whatever their name or nature may be and whether they are luminous or not. In like manner I include not only the particular substances named as sensitive to such influences, but any others which are known to be their equivalents or have the property of being similarly affected and

I will now describe a method of carrying out my process which will show the nature of my invention. I first utilize the phenomena which I wish to record in themselves varying a beam of light, and then throw this varying light upon a sensitive surface moved uniformly along in the path of the beam, thereby producing an impression or image thereon, which I afterward treat in any well known or suitable way to render permanent and adapt it to reproduce the original phenomena. For instance, I cause a sound which I wish to record to impinge upon a vibrating diaphragm and so vibrate a shutter in accordance with its own pulsations or sound waves. This shutter is arranged to vibrate across a beam of light and interrupt or manipulate it, producing variations in the light in accordance with the original sound waves or pulsations. This varying light I then throw upon a suitably prepared sensitive surface, and record those variations upon it, as by photography. In order to secure a continuous record of these variations I confine the action of the light to a very limited portion of the sensitive surface, as by means of a slitted screen or partition, which stops all light except that which passes through the slit. This slit or opening is of any suitable length preferred, but the width of it is very slight. Thus, at any given instant, the light can reach only a long and very narrow section or area of the sensitive surface. Now, by moving the latter along uniformly past the slit in the direction of its width, successive portions are exposed to the light coming through the slit and record the successive changes in the light, thus producing a negative or record thereof in the form of a long, narrow strip. This negative I render permanent and adapt it to reproduce similar pulsations or variations as by making the parts acted on by light transparent and the rest opaque. Other ways are described or may be used for treating the negative which I now term the "pattern". Any phenomenon may be thus recorded which is capable of vibrating the shutter or varying the light or other force which acts upon the sensitive surface to produce the record as described. These phenomena may act directly on the vibrating devices or sensitive surfaces, or indirectly, or may be transmitted from any distance in the form of varying electric currents which are then utilized for vibrating the shutter or varying the beam of light.

The sensitive surface may be moved by any suitable means, either manually as shown in Figure 10, or automatically, as in Fig. 35. The latter is necessary, however, whenever accuracy is required: and to pre-

which liberates the driving mechanism and stops it again at the proper times thus feeding the strip along only when needed. I utilize this "pattern" for reproducing the pulsations or variations recorded thereon, in different ways, as by causing it to vary a beam of light, to vary the resistance of electrical conductors, to produce vibrations in an athermanous substance, or otherwise, as may be preferred by the operator,—for all of which I have given full and explicit instructions herein.

The following description will illustrate one way in which this principle of my process may be carried out. Supposing that the image or form on the pattern is transparent, and that the intensity or extent of the pulsations recorded thereby is shown by the varying width of the image at different points, I arrange the light to shine through the slit as when making the pattern (the shutter being now removed) and feed the strip past the slit at the same speed as before. It is evident that the quantity of light which can be passed through the strip at any point of its length, as it is moved past the slit, is governed by the width of the transparent image at that point (as seen in Fig. 4, where *m* represents the slit or opening through the partition), and that the quantity of light passing through it will, therefore, be varied precisely in accordance with the original pulsations or phenomenon which controlled the formation of the pattern. If the original influence was a varying electrical current, we now have a beam of light varying in the same way, and can reproduce the variations of the original current by throwing this light upon a suitable current-controlling device, as a selenium cell, arranged in an elongated form like the slit, and varying its conductivity in proportion to the length of it which is exposed to light by the varying width of the transparent portion of the pattern or strip, as already explained. As the width of the transparent part before the slit increases more light will pass, a greater length of the selenium will be illuminated by it, its conductivity will be correspondingly increased and a stronger current will be allowed to flow through it and through the circuit of which it forms a portion—and vice versa. When the light is entirely cut off from the selenium, its resistance is so great that the current is (or may be) wholly prevented from passing through it. Thus the pattern can produce intermittent or undulating currents corresponding to the curves or forms upon it. In order to produce alternating currents, I arrange the selenium in two parts or sections, each section adapted to [illegible] whatever current penetrates it through [illegible] lighted up, a current will be sent through the circuit in one direction, and vice versa; and in either case the strength of the current will be governed by the amount of light transmitted by the pattern. Any desired variations can thus be produced in electrical currents by using a suitable pattern. These currents can be utilized on the spot, or can be sent through the circuit to a distance, and, if desired, can be there repeated and sent on in a manner well known to electricians, and finally utilized in a telephone or electrical receiver of any kind.

One current-controlling device can have several adjusting currents conducted through it, and can simultaneously and similarly control them all. As each current can be sent through a separate circuit to a different place or places, I can simultaneously reproduce the sounds or other phenomena recorded on the pattern at all of those places.

In using the pattern, I am not limited to one slit, as in making it, but I employ as many slits through the screen or partition as may be desirable, and provide each slit with a selenium cell or other device for utilizing the light passing through the pattern at that point. It is evident that a given part of the pattern will pass before the successive slits at different times and that the greater the distance between two slits, the longer the time it will take the pattern to pass over one to the other. I employ the successive slits with their selenium cells for extending the area over which sound can be heard—for example, by producing the sound first at the instrument, by the light from one cell; then I utilize the light from the next cell (when the given part of the pattern reaches it) to send a corresponding current to a sound-producing device at a point where the original sound has become weakened by passing through the air; and in like manner I reinforce this fresh sound at a proper distance farther on, by a current from the third slit and cell, and so on, through as many stages as desirable. I adjust the distance between the slits so that the time occupied by the pattern in passing from one slit to the next will be the same as that occupied by the sound produced at one stage to pass through the air to the next. By this means, the current arrives at the latter point and produces the sound, at the same instant that the original sound is heard there, and the two combine without interference. In this way, I repeat the sound from stage to stage in any direction or in all directions at the same time.

Many other improvements are fully described herein.

Having thus given a general reference to [illegible] the nature of my invention [illegible]

part of my invention as being carried out by throwing the light, after being properly manipulated by my devices, upon thin plates adapted to vibrate under the action of varying light and made from suitable materials, especially of hard rubber. This action of radiant energy is believed to be due to the thermal rays of the light, as it is found to be best produced by heat rays acting upon substances which are highly athermanous or absorbent of heat. Any such substance may, of course, be utilized for this part of my process and I have named several which may be substituted for the hard-rubber plates or diaphragms. When the intensity of the light (or thermal rays) is caused to vary in accordance with the pulsations or sound waves constituting a certain sound, and this varying light is thrown upon a suitable substance, that substance is caused to vibrate in accordance with those changes in the actuating force and consequently gives out sound corresponding to those changes or pulsations. As a matter of course, the stronger the actuating influence is, the greater is the effect produced. I also increase the effect by amplifying the recorded variations of the original phenomena when recording them on the negative, as herein fully set forth, and then employ this "negative" for manipulating the light or actuating force before throwing it upon the diaphragm or other sensitive body. Such a negative will, of course, produce more marked and effective variations in the light, and more powerful vibrations in a sensitive substance exposed to its action.

In describing my process, I shall for convenience call the effective force "light", although I am aware that that term is not strictly correct. It is well understood that what is generally known as light is made up of rays or forces having different properties, as, actinic, or chemical, luminous, thermal, and possibly others. Even in the case of the photographic image and the metal selenium used in my process, it is not strictly correct to say that the effects are produced by "light" rays for it is known that they may be produced by rays which are not luminous, although they ordinarily accompany the luminous rays in light. I mean, therefore, by the word "light" both in this specification and in the claims those rays, forces, or forms of energy which produce the effects, whatever their name or nature may be and whether they are luminous or not. In like manner I include not only the particular substances named as sensitive to such influences, but any others which are known to be their equivalents or have the property of being similarly affected and which may, therefore, be utilized for the purposes of my invention in substantially the same manner as herein set forth.

I will now describe a method of carrying out my process which will show the nature of my invention. I first utilize the phenomena which I wish to record in themselves varying a beam of light, and then throw this varying light upon a sensitive surface moved uniformly along in the path of the beam, thereby producing an impression or image thereon, which I afterward treat in any well known or suitable way to render permanent and adapt it to reproduce the original phenomena. For instance, I cause a sound which I wish to record to impinge upon a vibrating diaphragm and so vibrate a shutter in accordance with its own pulsations or sound waves. This shutter is arranged to vibrate across a beam of light and interrupt or manipulate it, producing variations in the light in accordance with the original sound waves or pulsations. This varying light I then throw upon a suitably prepared sensitive surface, and record those variations upon it, as by photography. In order to secure a continuous record of these variations I confine the action of the light to a very limited portion of the sensitive surface, as by means of a slitted screen or partition, which stops all light except that which passes through the slit. This slit or opening is of any suitable length preferred, but the width of it is very slight. Thus, at any given instant, the light can reach only a long and very narrow section or area of the sensitive surface. Now, by moving the latter along uniformly past the slit in the direction of its width, successive portions are exposed to the light coming through the slit and record the successive changes in the light, thus producing a negative or record thereof in the form of a long, narrow strip. This negative I render permanent and adapt it to reproduce similar pulsations or variations as by making the parts acted on by light transparent and the rest opaque. Other ways are described or may be used for treating the negative which I now term the "pattern". Any phenomenon may be thus recorded which is capable of vibrating the shutter or varying the light or other force which acts upon the sensitive surface to produce the record as described. These phenomena may act directly on the vibrating devices or sensitive surfaces, or indirectly, or may be transmitted from any distance in the form of varying electric currents which are then utilized for vibrating the shutter or varying the beam of light.

The sensitive surface may be moved by any suitable means, either manually as shown in Figure 10, or automatically, as in Fig. 35. The latter is necessary, however, whenever accuracy is required; and to prevent waste of the sensitive surface by moving when nothing is to be recorded, I employ an automatic starting and stopping device

which liberates the driving mechanism and stops it again at the proper times thus feeding the strip along only when needed. I utilize this "pattern" for reproducing the pulsations or variations recorded thereon, in different ways, as by causing it to vary a beam of light, to vary the resistance of electrical conductors, to produce vibrations in an athermanous substance, or otherwise, as may be preferred by the operator—for all of which I have given full and explicit instructions herein.

The following description will illustrate one way in which this principle of my process may be carried out. Supposing that the image or form on the pattern is transparent, and that the intensity or extent of the pulsations recorded thereby is shown by the varying width of the image at different points, I arrange the light to shine through the slit as when making the pattern (the shutter being now removed) and feed the strip past the slit at the same speed as before. It is evident that the quantity of light which can be passed through the strip at any point of its length, as it is moved past the slit, is governed by the width of the transparent image at that point (as seen in Fig. 4, where *m* represents the slit or opening through the partition), and that the quantity of light passing through it will, therefore, be varied precisely in accordance with the original pulsations or phenomenon which controlled the formation of the pattern. If the original influence was a varying electrical current, we now have a beam of light varying in the same way, and can reproduce the variations of the original current by throwing this light upon a suitable current-controlling device, as a selenium cell, arranged in an elongated form like the slit, and varying its conductivity in proportion to the length of it which is exposed to light by the varying width of the transparent portion of the pattern or strip, as already explained. As the width of the transparent part before the slit increases more light will pass, a greater length of the selenium will be illuminated by it, its conductivity will be correspondingly increased and a stronger current will be allowed to flow through it and through the circuit of which it forms a portion—and vice versa. When the light is entirely cut off from the selenium, its resistance is so great that the current is (or may be) wholly prevented from passing through it. Thus the pattern can produce intermittent or undulating currents corresponding to the curves or forms upon it. In order to produce alternating currents, I arrange the selenium in two parts or sections, each section adapted to send whatever current penetrates it through the circuit in a positive direction. As the pattern allows one section to be exposed and lighted up, a current will be sent through the circuit in one direction, and vice versa; and in either case the strength of the current will be governed by the amount of light transmitted by the pattern. Any desired variations can thus be produced in electrical currents by using a suitable pattern. These currents can be utilized on the spot, or can be sent through the circuit to a distance, and, if desired, can be there repeated and sent on in a manner well known to electricians, and finally utilized in a telephone or electrical receiver of any kind.

One current-controlling device can have several adjusting currents conducted through it, and can simultaneously and similarly control them all. As each current can be sent through a separate circuit to a different place or places, I can simultaneously reproduce the sounds or other phenomena recorded on the pattern at all of those places.

In using the pattern, I am not limited to one slit, as in making it, but I employ as many slits through the screen or partition as may be desirable, and provide each slit with a selenium cell or other device for utilizing the light passing through the pattern at that point. It is evident that a given part of the pattern will pass before the successive slits at different times and that the greater the distance between two slits, the longer the time it will take the pattern to pass over one to the other. I employ the successive slits with their selenium cells for extending the area over which sound can be heard—for example, by producing the sound first at the instrument, by the light from one cell; then I utilize the light from the next cell (when the given part of the pattern reaches it) to send a corresponding current to a sound-producing device at a point where the original sound has become weakened by passing through the air; and in like manner I reinforce this fresh sound at a proper distance farther on, by a current from the third slit and cell, and so on, through as many stages as desirable. I adjust the distance between the slits so that the time occupied by the pattern in passing from one slit to the next will be the same as that occupied by the sound produced at one stage to pass through the air to the next. By this means, the current arrives at the latter point and produces the sound, at the same instant that the original sound is heard there, and the two combine without interference. In this way, I repeat the sound from stage to stage in any direction or in all directions at the same time.

Many other improvements are fully described herein.

Having thus given a general reference to the nature of my invention and indicated its main features I will now describe in detail the methods which may be employed for

carrying it out and apparatus or forms in which it may be embodied, reference being had to the accompanying drawings forming a part of this specification and which show so much of my apparatus as is necessary to illustrate the invention herein claimed—each figure representing as much of the apparatus as is required for explaining or understanding the principles and operation of the parts intended to be illustrated thereby.

In these drawings: Fig. 1 is a diagrammatic view illustrating the defective result of attempting to produce a phonograph record by indenting the blank. Fig. 2 is an edge view of a speaking diaphragm having a shutter mounted thereon such as may be used in carrying out my invention. Fig. 3 is a view partly broken away showing a speaking diaphragm carrying a shutter, a source of light and a roller carrying a sensitive strip exposed to said light through an opening controlled by said shutter. Fig. 4 shows at the left a plan view of the sensitive strip and rollers and at right an enlarged plan view of a portion of the strip having the photographic record thereon. Fig. 5 shows two forms of shutter mounted on diaphragms which may be used in carrying out my invention. Fig. 6 is a plan view of a strip having thereon a sinuous record produced by the shutter shown in Fig. 5. Fig. 7 shows two additional forms of shutters which may be used. Fig. 8 shows the form of record produced by the shutter shown in Fig. 7. Fig. 9 shows a series of shutters mounted across the diaphragm with their edges meeting or overlapping. Fig. 10 is a vertical sectional view of one form of apparatus arranged for making the negative or pattern and moving it along by hand in carrying out my invention. Fig. 11 is a diagrammatic view showing means for reproducing and utilizing an opaque record by reflected light. Fig. 12 shows an electric circuit having a selenium bar therein adapted to be affected by light from my record. Fig. 13 is a similar view showing a flat selenium cell with a lens for concentrating the light from the record on it. Fig. 14 is a plan view of a partition having a series of light openings or slits therein for taking light from different parts of the record. Fig. 15 shows a record strip across a series of light openings and a plurality of means for utilizing or transmitting said record. Fig. 16 shows the photographic pattern produced by a succession of separate exposures. Fig. 17 is a similar view made by using a modified form of shutter. Fig. 18 shows shown in Fig. 7. Fig. 20 is a sectional view of an apparatus having a mirror on the speaking diaphragm for reflecting light to the record surface. Fig. 21 is a sectional view of an apparatus which may be used either for making or utilizing the record. Fig. 22 is a view more in detail of a plurality of means for utilizing a single record as shown in Fig. 15. Fig. 23 shows a plurality of light openings for a single strip with means for adjusting their relations or timing. Fig. 24 is a similar view of a modified construction. Fig. 25 is a plan view of a disk record having the photographic impressions thereon in a spiral. Fig. 26 is a perspective view of a cylinder having a spiral record thereon. Fig. 27 is another form of record having thereon a single circular pattern. Fig. 28 is still another form showing separate parallel patterns. Fig. 29 is a sectional view of an apparatus for taking and reproducing the record having a lens for concentrating the light upon the strip. Fig. 30 is a view of a divided shutter and two selenium bars for producing alternating current. Fig. 31 shows a modified form of divided shutter mounted as a key. Fig. 32 is a view of another arrangement. Fig. 33 is similar to Fig. 18 showing the electrical connections more clearly. Fig. 34 is a diagrammatic view showing means for producing, transmitting and repeating electrical impulses through several successive stages or circuits. Fig. 35 is a sectional view of an apparatus for receiving a message sent over the line including automatic starting and stopping mechanism for the receiving strips. Fig. 36 is a detail view of a portion of the stopping mechanism. Fig. 37 is a sectional view of an apparatus adapted to strengthen light pulsations which are recorded or reproduced. Fig. 38 is a general view of the apparatus disclosed in Fig. 10 but more in detail showing more clearly the arrangement and connection of the parts. Fig. 39 is a horizontal section on the line x—x, Fig. 38. Fig. 40 is a more complete detail view of the arrangement illustrated in Fig. 15. Fig. 41 shows means for adjustably mounting the lens in its relation to the slit or light opening. Fig. 42 is a similar view showing several lenses and slits. Fig. 43 shows a series of lenses each being separately adjustable. Fig. 44 shows the means for mounting and operating the diaphragm carrying the shutter in Fig. 38. Fig. 45 is a perspective view of the doors for the apparatus shown in Fig. 38. Fig. 46 shows the arrangement and connection of parts for receiving an incoming message. Fig. 47

section of motor operated mechanism for moving the record strip. Fig. 49 is a detail sectional view of one of the reels carrying the strip. Fig. 50 is a view of a reel looking from one end. Fig. 51 is a similar view looking from the other end.

For convenience of description I will call my apparatus a phonograph, but I expressly declare that I do not intend thereby to limit the scope of my invention to what is commonly known as or done by the so-called "phonographs," or to narrow or restrict the scope of the invention in any way, but use the term merely for convenience.

The great trouble with phonographs heretofore is that they have undertaken to record and reproduce delicate air pulsations by mechanical means. In the first place, the diaphragm as heretofore arranged cannot possibly record the true form of the sound waves, nor even the actual mode of vibration of a free diaphragm under the influence of the sound pulsations. The vibrations of the recording point or tracer, in the center of the diaphragm, do not truly represent the vibration of the diaphragm at any point except at the center. And while it is practically sufficient for ordinary purposes, for other purposes it would be desirable to record the vibrations of the other parts of the diaphragm with their changing nodal points and points of maximum motion. This I accomplish by independent sectional shutters attached to different parts of the diaphragm each of which makes its separate record of the vibrations of the part to which it is attached, or otherwise. But even if the vibration of the center of the diaphragm truly represented the sound waves, it would be impossible for it to truly record them because the metal point thereto attached is hindered in its vibrations by the labor of impressing its motion in the foil or other material used in its place. This resistance not only retards the diaphragm itself, but it retards it in a very variable manner. When the tracer point reaches a soft, thin or unsupported spot in the foil, it moves farther than the average, while thick or hard spots, etc., reduce the motion below the average. A score of other faults could be mentioned, but the most important is that when the point is descending the pressure of the foil against its inclined forward surface retards the motion of the diaphragm; but when ascending it hastens or assists it, thus deforming the vibrations of the diaphragm itself. This will be understood by examining Fig. 1, where *a* is the tracer point, with its front surface inclined at an angle of about 45°. Now if this point is moving in the direction of the arrow *b* and the foil is moving in the direction of the arrow *c*, it is evident that the point will be pressed back by the foil and its motion retarded. If, however, the foil is moving in the direction of the arrow *d*, the point will be pressed forward and its motion accelerated. Now the foil is moving in the direction of the arrow *c* when the point is descending and in the direction of the arrow *d* when the point is ascending, and hence the motion of the point is retarded when descending and accelerated when ascending. Fig. 2 shows the actual form of a supposed sound wave, while the dotted curve shows the form which the point will tend to make—and this discrepancy will be aggravated by the stiffness of the foil, the weakness of the vibration or the spring of the tracer and many other causes. As the perfection of the speaking depends entirely upon the exactness with which the natural sound waves are reproduced, it is evident that a method which does not record the correct form of a single one of the sound waves out of the hundreds or thousands which occur in each second of time to produce the sounds we hear, cannot possibly reproduce correctly the original sounds. All these difficulties I obviate by dispensing entirely with the tracer and its spring and the foil or any substitute for it; or any mechanical pressure devices whatever, for recording the sound-waves tangibly and employ means for recording the vibrations of the diaphragm which neither retard nor accelerate them, but will truly record the most extreme and violent or the gentlest pulsations and every one exactly as it occurred. This I do by causing the diaphragm as it vibrates to vary the quantity of light which passes through an aperture to a surface sensitive to light by which the sound waves are fixed and recorded. No matter how many or how different the sounds which have joined in producing composite sound waves which strike the diaphragm, the true number, intensity, and form of every one of them will thus be preserved unchanged by the process of recording. This record I call the negative and from it I can reproduce copies or duplicates in the same or other materials and can use it or them for the reproduction of the sounds recorded thereon. I also in the same way record any other phenomena such as signals, electric currents, and other influences capable of moving the diaphragm.

In the second place, even if the foil or matrix usually employed has been shaped exactly corresponding to the sound waves, it would be impossible to exactly reproduce those sound waves by moving the curved surface under a point attached to the sound producing or speaking diaphragm and causing the latter to vibrate, as is usually done, for several reasons; and even if it could, the excessive pressure of the point on the rising sides and tops of the curves soon wears them and changes their shapes from the true curves. No material now used could stand such use without being rapidly worn out of shape and destroyed. Moreover, the extreme rapidity of the vibrations renders it

which it may be embodied, reference being had to the accompanying drawings forming a part of this specification and which show so much of my apparatus as is necessary to illustrate the invention herein claimed—each figure representing as much of the apparatus as is required for explaining or understanding the principles and operation of the parts intended to be illustrated thereby.

In these drawings: Fig. 1 is a diagrammatic view illustrating the defective result of attempting to produce a phonograph record by indenting the blank. Fig. 2 is an edge view of a speaking diaphragm having a shutter mounted thereon such as may be used in carrying out my invention. Fig. 3 is a view partly broken away showing a speaking diaphragm carrying a shutter, a source of light and a roller carrying a sensitive strip exposed to said light through an opening controlled by said shutter. Fig. 4 shows at the left a plan view of the sensitive strip and rollers and at right an enlarged plan view of a portion of the strip having the photographic record thereon. Fig. 5 shows two forms of shutter mounted on diaphragms which may be used in carrying out my invention. Fig. 6 is a plan view of a strip having thereon a sinuous record produced by the shutter shown in Fig. 5. Fig. 7 shows two additional forms of shutters which may be used. Fig. 8 shows the form of record produced by the shutter shown in Fig. 7. Fig. 9 shows a series of shutters mounted across the diaphragm with their edges meeting or overlapping. Fig. 10 is a vertical sectional view of one form of apparatus arranged for making the negative or pattern and moving it along by hand in carrying out my invention. Fig. 11 is a diagrammatic view showing means for reproducing and utilizing an opaque record by reflected light. Fig. 12 shows an electric circuit having a selenium bar therein adapted to be affected by light from my record. Fig. 13 is a similar view showing a flat selenium cell with a lens for concentrating the light from the record on it. Fig. 14 is a plan view of a partition having a series of light openings or slits therein for taking light from different parts of the record. Fig. 15 shows a record strip across a series of light openings and a plurality of means for utilizing or transmitting said record. Fig. 16 shows the photographic pattern produced by a succession of separate exposures. Fig. 17 is a similar view made by using a modified form of shutter. Fig. 18 shows two selenium cells arranged for exposure through a single opening to produce alternating current. Fig. 19 shows a record such as will be produced by the upper shutter of an apparatus having a mirror on the speaking diaphragm for reflecting light to the record surface. Fig. 21 is a sectional view of an apparatus which may be used either for making or utilizing the record. Fig. 22 is a view more in detail of a plurality of means for utilizing a single record as shown in Fig. 15. Fig. 23 shows a plurality of light openings for a single strip with means for adjusting their relations or timing. Fig. 24 is a similar view of a modified construction. Fig. 25 is a plan view of a disk record having the photographic impressions thereon in a spiral. Fig. 26 is a perspective view of a cylinder having a spiral record thereon. Fig. 27 is another form of record having thereon a single circular pattern. Fig. 28 is still another form showing separate parallel patterns. Fig. 29 is a sectional view of an apparatus for taking and reproducing the record having a lens for concentrating the light upon the strip. Fig. 30 is a view of a divided shutter and two selenium bars for producing alternating current. Fig. 31 shows a modified form of divided shutter mounted as a key. Fig. 32 is a view of another arrangement. Fig. 33 is similar to Fig. 18 showing the electrical connections more clearly. Fig. 34 is a diagrammatic view showing means for producing, transmitting and repeating electrical impulses through several successive stages or circuits. Fig. 35 is a sectional view of an apparatus for receiving a message sent over the line including automatic starting and stopping mechanism for the receiving strips. Fig. 36 is a detail view of a portion of the stopping mechanism. Fig. 37 is a sectional view of an apparatus adapted to strengthen light pulsations which are recorded or reproduced. Fig. 38 is a general view of the apparatus disclosed in Fig. 10 but more in detail showing more clearly the arrangement and connection of the parts. Fig. 39 is a horizontal section on the line x—x, Fig. 38. Fig. 40 is a more complete detail view of the arrangement illustrated in Fig. 15. Fig. 41 shows means for adjustably mounting the lens in its relation to the slit or light opening. Fig. 42 is a similar view showing several lenses and slits. Fig. 43 shows a series of lenses each being separately adjustable. Fig. 44 shows the means for mounting and operating the diaphragm carrying the shutter in Fig. 38. Fig. 45 is a perspective view of the doors for the apparatus shown in Fig. 38. Fig. 46 shows the arrangement and connection of parts for receiving an incoming message. Fig. 47 shows the arrangement of parts for operating the starting and stopping mechanism at the receiving station by means of a selenium cell. Fig. 48 is a view partly in

section of motor operated mechanism for moving the record strip. Fig. 49 is a detail sectional view of one of the reels carrying the strip. Fig. 50 is a view of a reel looking from one end. Fig. 51 is a similar view looking from the other end.

For convenience of description I will call my apparatus a phonograph, but I expressly declare that I do not intend thereby to limit the scope of my invention to what is commonly known as or done by the so-called "phonographs," or to narrow or restrict the scope of the invention in any way, but use the term merely for convenience.

The great trouble with phonographs heretofore is that they have undertaken to record and reproduce delicate air pulsations by mechanical means. In the first place, the diaphragm as heretofore arranged cannot possibly record the true form of the sound waves, nor even the actual mode of vibration of a free diaphragm under the influence of the sound pulsations. The vibrations of the recording point or tracer, in the center of the diaphragm, do not truly represent the vibration of the diaphragm at any point except at the center. And while it is practically sufficient for ordinary purposes, for other purposes it would be desirable to record the vibrations of the other parts of the diaphragm with their changing nodal points and points of maximum motion. This I accomplish by independent sectional shutters attached to different parts of the diaphragm each of which makes its separate record of the vibrations of the part to which it is attached, or otherwise. But even if the vibration of the center of the diaphragm truly represented the sound waves, it would be impossible for it to truly record them because the metal point thereto attached is hindered in its vibrations by the labor of impressing its motion in the foil or other material used in its place. This resistance not only retards the diaphragm itself, but it retards it in a very variable manner. When the tracer point reaches a soft, thin or unsupported spot in the foil, it moves farther than the average, while thick or hard spots, etc., reduce the motion below the average. A score of other faults could be mentioned, but the most important is that when the point is descending the pressure of the foil against its inclined forward surface retards the motion of the diaphragm; but when ascending it hastens or assists it, thus deforming the vibrations of the diaphragm itself. This will be understood by examining Fig. 1, where *a* is the tracer point, with its front surface inclined backward to prevent clogging. The dotted line *b b* represents the original level of the foil which is fed along in the direction of the arrow and the solid curved line shows the actual form of a supposed sound wave, while the dotted curve shows the form which the point will tend to make—and this discrepancy will be aggravated by the stiffness of the foil, the weakness of the vibration or the spring of the tracer and many other causes. As the perfection of the speaking depends entirely upon the exactness with which the natural sound waves are reproduced, it is evident that a method which does not record the correct form of a single one of the sound waves out of the hundreds or thousands which occur in each second of time to produce the sounds we hear, cannot possibly reproduce correctly the original sounds. All these difficulties I obviate by dispensing entirely with the tracer and its spring and the foil or any substitute for it; or any mechanical pressure devices whatever, for recording the sound-waves tangibly and employ means for recording the vibrations of the diaphragm which neither retard nor accelerate them, but will truly record the most extreme and violent or the gentlest pulsations and every one exactly as it occurred. This I do by causing the diaphragm as it vibrates to vary the quantity of light which passes through an aperture to a surface sensitive to light by which the sound waves are fixed and recorded. No matter how many or how different the sounds which have joined in producing composite sound waves which strike the diaphragm, the true number, intensity, and form of every one of them will thus be preserved unchanged by the process of recording. This record I call the negative and from it I can reproduce copies or duplicates in the same or other materials and can use it or them for the reproduction of the sounds recorded thereon. I also in the same way record any other phenomena such as signals, electric currents, and other influences capable of moving the diaphragm.

In the second place, even if the foil or matrix usually employed has been shaped exactly corresponding to the sound waves, it would be impossible to exactly reproduce those sound waves by moving the curved surface under a point attached to the sound producing or speaking diaphragm and causing the latter to vibrate, as is usually done, for several reasons; and even if it could, the excessive pressure of the point on the rising sides and tops of the curves soon wears them and changes their shapes from the true curves. No material now used could stand such use without being rapidly worn out of shape and destroyed. Moreover, the extreme rapidity of the vibrations renders it impossible to perfectly perform any mechanical movement, *i. e.*, to apply force in a constantly varying manner and in opposite directions by mechanical devices with

such rapidity and precision as is here necessary. The great desideratum is, wherever practicable, to avoid not only hand labor in making or finishing any of the parts, but to avoid merely mechanical devices entirely, and to provide means by which as much as possible of the work may be performed by the perfect-acting, unwearing, and swift-moving forces of nature. I, therefore, operate the diaphragm by throwing upon it light whose intensity is varied correspondingly with the form of our sound waves as described, which, as is known, causes a diaphragm to vibrate and produce the sounds corresponding to those waves. This I accomplish by passing a powerful beam of light through the negative I have before prepared, to and upon the diaphragm. This light passes through a narrow slit corresponding to the one used in making the negative, and by moving the negative along behind this slit at the same speed as when making the negative, it is evident that the original variations in the intensity of the light are exactly reproduced and if they are thrown upon the diaphragm, it will give out the same sound as that which originally caused it to vibrate. Thus, instead of trying to shove the diaphragm back and forth by machinery some hundreds or thousands of times per second, at a constantly varying speed, and making each motion exactly according to a prescribed pattern, each one of which may be different from any of the others, I accomplish the same end by the slow motion of a single piece or negative and causing that to control the action of a beam of light directed upon the diaphragm.

Instead of the light beam passing through a transparent negative it may be thrown upon an opaque negative and the image of the pattern be reflected therefrom and utilized, or the intensity of the light thrown upon the diaphragm may be automatically varied by the negative in many other ways.

In making the negatives, the sound to be recorded is caused to impinge upon a vibrating diaphragm, which is properly damped and arranged, as will be readily understood by those versed in telephony. To the center of the diaphragm *d*, Fig. 2, is fixed a vertical screen or shutter *s* of mica or other light and stiff material being attached by its center and the outer corners rounded off a little to prevent their contact with the diaphragm during its backward vibrations, or to the left. It projects out at right angles to the plane of the diaphragm and is made opaque to prevent the passage rays across the screen or partition S, which has a long narrow slit *m* in it, through which the light passes and strikes the prepared surface, which in this case is represented as a strip of sensitized paper, fed at a regular speed over the rollers R R. As the diaphragm shutter *s* normally stands, its edge shuts the light off from one half of the slit, and in vibrating it covers up more or less of the strip, according to the extent of the vibrations. The paper strip being carried along behind the slit *m*, Fig. 4, the edge of the shutter will describe a curved line at the junction of the part *e'*; not acted upon by the light, and *e*, which is acted upon; and by proper treatment the latter may be dissolved away or otherwise made transparent in any well known way, as will be at once understood by photographers. This curve or junction line, of course, represents the motion of vibration of the center of the diaphragm under the action of the sound waves or pulsations of the air. The forms of these waves as is well known, are the resultant of all the sounds which would be heard together if the ear was substituted in the place of the diaphragm and the prominences of the transparent part represent condensations of the air at the instants that those parts of the strip were behind the slit and exposed to the light passing through it while the hollows represent rarefactions produced by the sound waves or pulsations.

By varying the relative distances of the light, the shutter, and the slit or sensitive surface from each other, we can, increase the apparent amplitude of the sound waves as recorded on the sensitive surface, without changing their forms. For example, if we move the light from *l* to *l'* in Fig. 3 at half its former distance from the shutter *s* or arrange the strip twice as far from the shutter, we shall double the amplitude of the curves on the strip produced by the vibrations of the shutter. In the same way, we can amplify the recorded vibrations in any other proportion desired, and the greater that amplitude is the more powerful will be the effect of the negative or pattern when employed in reproducing phenomena recorded thereon. And it must be understood that in all cases the relative distances of the parts are to be such as will enable the minute vibrations of the diaphragm and shutter to produce upon the record curves having sufficient amplitude for working purposes. This method of amplifying the vibrations is often important and can be applied for strengthening plusations or variations in light or electrical currents as well

also by other means, as by magnetic attraction, connection with vibrating bodies and the like. This is illustrated in Figs. 21 and 37, which show the combination of my telephone and the phonograph, as fully hereinafter described. My apparatus is capable of recording any phenomena which can actuate the shutter or device which varies the beam of light,—and that device may, of course, be actuated in any suitable manner, as will be in the precise manner described.

Instead of a shutter manipulating the light rays we may use a plane mirror attached to the center of the diaphragm and place the light in front but a little to one side; the light beam will be reflected to the other side of the center, or normal, as seen in Fig. 20, where the light from *l* is properly directed upon the mirror and reflected through the tube and the slit *m* upon the strip P. Now, when the diaphragm vibrates the spot of light, it will also change its position, and the amplitude of its vibrations will be greatly increased by the angle between the light and the central line or axis of the mirror. The amplitude of the curves can also be increased to any extent by removing the strip P to a suitable distance from the mirror, as described with the shutter. But I prefer the way before described for making negatives for this purpose, although any suitable method may, of course, be used which will accurately record the forms of the sound waves upon the negative—which is the object sought.

If, instead of an opaque shutter on the diaphragm, we have a vertical transparent strip across said shutter, the light will reach the paper strip behind the screen only through the intersection of the two slits in front of it, forming merely a square spot of light, as shown by Fig. 5 at the intersection of the two slits *n* and *m*. The vertical slit on the mica should make the light beam of about the same width as the stationary horizontal slit in the screen. As the diaphragm vibrates and the paper is moved along, we produce (after dissolving out the parts exposed to light, blacking the rest, soaking in oil or otherwise rendering it transparent) a narrow, transparent curve on the paper strip, as represented in Fig. 6. Instead of the vertical strip, we may use a transparent spot at the point which will fall on the center of the stationary slit when the diaphragm is still, as seen at *n'* on the upper shutter shown in Fig. 5. This also makes a negative strip, like Fig. 6. Another way is to have two shutters, one on the diaphragm, as before, only larger, and the other stationary and parallel to but not touching These opaque edges are notched so that at their junction they lap so as to form square or diamond spaces which are transparent, as in Fig. 7, where *s* is the vibrating shutter and *s'* is the stationary one. In this case, the slit in the screen before the paper strip is placed vertically and the paper is fed past it horizontally. Consequently, as the movable shutter *s* is vibrated to and fro before the other, these transparent squares or diamonds become alternately larger and smaller. But they should not quite meet nor be quite extinguished even by the greatest vibrations of the diaphragm. The result is to produce on the opaque negative strip transparent lines of varying width, one of which is shown enlarged in Fig. 8. If a narrow beam of light is sent through it, it will be more or less obscured at different places along the strip, *i. e.*, the quantity of light allowed by the transparent parts of the strip to pass through the slit will be increased or decreased corresponding exactly to the pulsations of the diaphragm (or the sound waves) not only in number and intensity, but also in the form or manner of vibrating.

At 2, Fig. 8, is seen a fine opaque line in the middle transparent strip. This is made by placing a fine wire across the center of the stationary slit *m* to stop the light and indicate the center of the negative strip. Its convenience will be manifest. In practice, the stationary notched shutter *s'* is not necessary as the slit *m* is sufficient in connection with the vibrating notched shutter, as seen by the lower figure in Fig. 7 which shows how the lateral vibration of the shutter with its transparent notch will vary the amount of light passing through the stationary slit *m*.

When desired to copy the pulsations of the diaphragm with the greatest possible exactness and completeness, the shutter should be divided or sectional, and each section may be notched like the lower shutter in Fig. 7 and will produce on the negative its own independent bulbous record like that shown in Fig. 8, although there will of course even in this instance be some overlapping of records.

In Fig. 9 *d* is the diaphragm, 2 is the shutter at its center and 3 and 4 are other small shutters attached to different parts of the diaphragm. Each shutter having its own slit *m* and producing its own individual record or pattern strip as already explained for the single shutter, each one being arranged as described for shutter S, would make its own wave or record of the vibrations of that part of the diaphragm to which

such rapidity and precision as is here necessary. The great desideratum is, wherever practicable, to avoid not only hand labor in making or finishing any of the parts, but to avoid merely mechanical devices entirely, and to provide means by which as much as possible of the work may be performed by the perfect-acting, unwearing, and swift-moving forces of nature. I, therefore, operate the diaphragm by throwing upon it light whose intensity is varied correspondingly with the form of our sound waves as described, which, as is known, causes a diaphragm to vibrate and produce the sounds corresponding to those waves. This I accomplish by passing a powerful beam of light through the negative I have before prepared, to and upon the diaphragm. This light passes through a narrow slit corresponding to the one used in making the negative, and by moving the negative along behind this slit at the same speed as when making the negative, it is evident that the original variations in the intensity of the light are exactly reproduced and if they are thrown upon the diaphragm, it will give out the same sound as that which originally caused it to vibrate. Thus, instead of trying to shove the diaphragm back and forth by machinery some hundreds or thousands of times per second, at a constantly varying speed, and making each motion exactly according to a prescribed pattern, each one of which may be different from any of the others, I accomplish the same end by the slow motion of a single piece or negative and causing that to control the action of a beam of light directed upon the diaphragm.

Instead of the light beam passing through a transparent negative it may be thrown upon an opaque negative and the image of the pattern be reflected therefrom and utilized, or the intensity of the light thrown upon the diaphragm may be automatically varied by the negative in many other ways.

In making the negatives, the sound to be recorded is caused to impinge upon a vibrating diaphragm, which is properly damped and arranged, as will be readily understood by those versed in telephony. To the center of the diaphragm *d*, Fig. 2, is fixed a vertical screen or shutter *s* of mica or other light and stiff material being attached by its center and the outer corners rounded off a little to prevent their contact with the diaphragm during its backward vibrations, or to the left. It projects out at right angles to the plane of the diaphragm and is made opaque to prevent the passage of any light through it.

Fig. 3 is a vertical plan view; *s* is the shutter, *d* the diaphragm, *l* is a powerful light throwing a beam of nearly parallel rays across the screen or partition S, which has a long narrow slit *m* in it, through which the light passes and strikes the prepared surface, which in this case is represented as a strip of sensitized paper, fed at a regular speed over the rollers R R. As the diaphragm shutter *s* normally stands, its edge shuts the light off from one half of the slit, and in vibrating it covers up more or less of the strip, according to the extent of the vibrations. The paper strip being carried along behind the slit *m*, Fig. 4, the edge of the shutter will describe a curved line at the junction of the part *e'*; not acted upon by the light, and *e*, which is acted upon; and by proper treatment the latter may be dissolved away or otherwise made transparent in any well known way, as will be at once understood by photographers. This curve or junction line, of course, represents the motion of vibration of the center of the diaphragm under the action of the sound waves or pulsations of the air. The forms of these waves as is well known, are the resultant of all the sounds which would be heard together if the ear was substituted in the place of the diaphragm and the prominences of the transparent part represent condensations of the air at the instants that those parts of the strip were behind the slit and exposed to the light passing through it while the hollows represent rarefactions produced by the sound waves or pulsations.

By varying the relative distances of the light, the shutter, and the slit or sensitive surface from each other, we can, increase the apparent amplitude of the sound waves as recorded on the sensitive surface, without changing their forms. For example, if we move the light from *l* to *l'* in Fig. 3 at half its former distance from the shutter *s* or arrange the strip twice as far from the shutter, we shall double the amplitude of the curves on the strip produced by the vibrations of the shutter. In the same way, we can amplify the recorded vibrations in any other proportion desired, and the greater that amplitude is the more powerful will be the effect of the negative or pattern when employed in reproducing phenomena recorded thereon. And it must be understood that in all cases the relative distances of the parts are to be such as will enable the minute vibrations of the diaphragm and shutter to produce upon the record curves having sufficient amplitude for working purposes. This method of amplifying the vibrations is often important and can be applied for strengthening plusations or variations in light or electrical currents as well as in sounds. I would here remark that the diaphragm and shutter may be caused to vibrate not only by the direct impact of sound pulsations, as before described, but

also by other means, as by magnetic attraction, connection with vibrating bodies and the like. This is illustrated in Figs. 21 and 37, which show the combination of my telephone and the phonograph, as fully hereinafter described. My apparatus is capable of recording any phenomena which can actuate the shutter or device which varies the beam of light,—and that device may, of course, be actuated in any suitable manner, as will be in the precise manner described.

Instead of a shutter manipulating the light rays we may use a plane mirror attached to the center of the diaphragm and place the light in front but a little to one side; the light beam will be reflected to the other side of the center, or normal, as seen in Fig. 20, where the light from *l* is properly directed upon the mirror and reflected through the tube and the slit *m* upon the strip P. Now, when the diaphragm vibrates the spot of light, it will also change its position, and the amplitude of its vibrations will be greatly increased by the angle between the light and the central line or axis of the mirror. The amplitude of the curves can also be increased to any extent by removing the strip P to a suitable distance from the mirror, as described with the shutter. But I prefer the way before described for making negatives for this purpose, although any suitable method may, of course, be used which will accurately record the forms of the sound waves upon the negative—which is the object sought.

If, instead of an opaque shutter on the diaphragm, we have a vertical transparent strip across said shutter, the light will reach the paper strip behind the screen only through the intersection of the two slits in front of it, forming merely a square spot of light, as shown by Fig. 5 at the intersection of the two slits *n* and *m*. The vertical slit on the mica should make the light beam of about the same width as the stationary horizontal slit in the screen. As the diaphragm vibrates and the paper is moved along, we produce (after dissolving out the parts exposed to light, blacking the rest, soaking in oil or otherwise rendering it transparent) a narrow, transparent curve on the paper strip, as represented in Fig. 6. Instead of the vertical strip, we may use a transparent spot at the point which will fall on the center of the stationary slit when the diaphragm is still, as seen at *n'* on the upper shutter shown in Fig. 5. This also makes a negative strip, like Fig. 6. Another way is to have two shutters, one on the diaphragm, as before, only larger, and the other stationary and parallel to but not touching it. These shutters are painted, or otherwise treated to make them opaque up to a certain point, the rest being transparent. [illegible] their junction they lap so as to form square or diamond spaces which are transparent, as in Fig. 7, where *s* is the vibrating shutter and *s'* is the stationary one. In this case, the slit in the screen before the paper strip is placed vertically and the paper is fed past it horizontally. Consequently, as the movable shutter *s* is vibrated to and fro before the other, these transparent squares or diamonds become alternately larger and smaller. But they should not quite meet nor be quite extinguished even by the greatest vibrations of the diaphragm. The result is to produce on the opaque negative strip transparent lines of varying width, one of which is shown enlarged in Fig. 8. If a narrow beam of light is sent through it, it will be more or less obscured at different places along the strip, *i. e.*, the quantity of light allowed by the transparent parts of the strip to pass through the slit will be increased or decreased corresponding exactly to the pulsations of the diaphragm (or the sound waves) not only in number and intensity, but also in the form or manner of vibrating.

At 2, Fig. 8, is seen a fine opaque line in the middle transparent strip. This is made by placing a fine wire across the center of the stationary slit *m* to stop the light and indicate the center of the negative strip. Its convenience will be manifest. In practice, the stationary notched shutter *s'* is not necessary as the slit *m* is sufficient in connection with the vibrating notched shutter, as seen by the lower figure in Fig. 7 which shows how the lateral vibration of the shutter with its transparent notch will vary the amount of light passing through the stationary slit *m*.

When desired to copy the pulsations of the diaphragm with the greatest possible exactness and completeness, the shutter should be divided or sectional, and each section may be notched like the lower shutter in Fig. 7 and will produce on the negative its own independent bulbous record like that shown in Fig. 8, although there will of course even in this instance be some overlapping of records.

In Fig. 9 *d* is the diaphragm, 2 is the shutter at its center and 3 and 4 are other small shutters attached to different parts of the diaphragm. Each shutter having its own slit *m* and producing its own individual record or pattern strip as already explained for the single shutter, each one being arranged as described for shutter S, would make its own wave or record of the vibrations of that part of the diaphragm to which it was attached and all of them would thus show the movements across the whole diaphragm, and the relative times and posi-

tions of the nodal points. In this way, it is evident that the action of all parts of the diaphragm will be correctly recorded on the negative and as the nodal points change from one section to another, as different sounds act on the diaphragm, so will the bulbous lines on the negative change their forms. And when they are in turn caused to vary the light thrown upon a speaking diaphragm D, Fig. 10, they will reproduce the original pulsations of diaphragm *d* with its varying nodal points and will correspond more closely to the original than would be the case if only the vibrations of the center of the diaphragm were recorded on the negative. The shutters are easily attached to the diaphragm by their centers and being inclined slightly somewhat like the slats of a window blind, similarly to the closed slats of a window blind, their edges will lap without touching each other.

It is evident that when a correct negative is once obtained perfect copies can be produced not only by photographic, but also by ordinary printing processes, or even by mechanical means at a merely nominal cost, even for the most elaborate negatives.

Having thus explained the principles of my invention, Fig. 10, represents an apparatus which I have devised for carrying out my method arranged more particularly for making negatives or patterns. At A is a roll of the prepared negative strip wound upon a bobbin which is mounted in journal bearings in any convenient way. This strip may be of any suitable thin and flexible material which may be strong fine paper, but I prefer what is known as paper parchment, although many other substances may be used. It should be covered with a thin film made very sensitive to light by any of the instantaneous processes employed in photography, although a dry process will be most convenient with this form of negative. After being properly coated and sensitized, it should be carefully dried, rolled up, and protected from light or damp until ready to use it. It may be thus coated and sensitized either before or after being cut up into strips of width suitable for use, but in the latter case, care must be taken in the cutting not to disturb the adhesion of the film to the strip. A suitable width is 1/2 or 3/4 inch and the length will, of course, be governed by convenience or the choice of the operator.

The roll A is free to turn, being held only by the spring 1 pressing upon it sufficiently to prevent it from turning faster than the strip is needed. From A the strip passes over the flanged rollers B B, Figs. 3, 4 and the roller enough to carry that along with it. If desired, it can also press lightly on the roller A′ to assist in rewinding the strip upon it. To this roller can be applied the power which feeds the strip along before the slit *m* in the screen or partition S. For experiment or common telegraphic purposes a crank may be attached to the roller R′ or R, as shown in Fig. 10, or the strip may be otherwise fed by hand. But when accuracy is required, some motor should be employed which will give the negative a perfectly uniform and known rate of speed. These are not new and need not be described, as they form no part of my invention. The motor may be attached to or contained in the box or frame of the phonograph or otherwise connected as preferred. The strip being thus fed along at a uniform speed it is wound upon a second roller A′ or may simply be fed loosely into the bottom of the box or case of the phonograph after exposure to the varying light. It will now remain unchanged if kept from light and damp, for days or even weeks, or, on the other hand, it may be at once developed, intensified, fixed, or otherwise treated to render the image permanent,—according to the process employed or the effect desired. All of which will be at once understood by those versed in photography, who will be enabled from the foregoing description to readily make a negative strip having the characteristics required and will probably prefer the gelatino-bromid process. If the paper seems to have a greasy nature, it may, before applying bromid emulsion, be coated with four per cent. solution of white of egg to which sufficient chrome-alum has been added to give it a slight bluish tinge. This will insure the film adhering perfectly. But it will seldom be required if a good quality of paper or parchment is used. These strips being fixed, they may be treated and used in different ways. The parts acted upon by light may be made transparent and the rest blacked and rendered more opaque and the strip used by transmitting light through it; or the strip may be left opaque and used by reflected light—in which case the parts acted upon by light should be made as white or brilliant, and those not acted upon as black and absorbent of light as possible, all of which can be done by any one out of many well known ways, and detailed directions are not necessary. For example, a strip to be used by transmitted light may have the dark parts blacked with carbon-ink, flexible black varnish, or otherwise, and the lights rendered transparent by dipping in castor oil thinned with absolute alcohol. The finished

beam of light, by feeding the strip before the slit *m* at the same speed as when making the negative and throwing the beam of light through it as it passes the slit. To do this, the diaphragm *d* with its shutter is removed—the upright frame which holds it being arranged to slide on a foot-piece which fits in grooves so that it may be slid into its place for use, or moved back out of the way, as desired.

Fig. 21 is a horizontal sectional or plan view of the apparatus (arranged for reproducing the sounds or phenomena recorded in the negative or pattern), and shows the shutter and diaphragm carried on the same frame or base as the telephone E*l*, which slides in grooves in the pieces *t t*, and the dotted lines show the position of the base when slid back far enough to get the shutter out of the way for our present purposes, but not admitting any light to the interior of the apparatus. The mouth-piece O is, of course, closed when thus utilizing the negative. The square chamber which contained the diaphragm is now empty or free and allows the light *l* to shine unobstructed across it to and through the slit *m* onto and through the strip which is rapidly fed before it, whereby the light which passes through the strip is varied in precisely the same manner as the original beam of light was varied by the shutter on the diaphragm *d*, *i. e.*, the greater the proportion of the strip which is transparent, the longer the beam of light which is passed through it, and vice versa (see Fig. 4). This light can now be used to produce corresponding variations or pulsations in sound, electric currents, magnetic attractions, etc., as desired. We can reconvert this varying light into sounds in different ways. It may be passed through a plano-convex or, rather, plano-cylindrical lens *p*, Fig. 10, or any suitable optical devices to widen and disperse it properly and be thrown directly upon a thin hard-rubber diaphragm D properly arranged for speaking or giving out sounds. Or, in place of the lens *p* a selenium bar or cell may be arranged to receive the light and thereby vary a current of electricity flowing through it, as shown at *p* in Fig. 21, which current may then be conducted to one of my telephones (described herein) which is substituted for the diaphragm D and the sounds will be produced by it with any desired loudness, or the current may be conducted by wire to any other instrument or place in the same way as in telegraphy and there converted into sounds or utilized for any other purposes, as in Fig. 21, where a current from D is represented as conveyed to a telephone T′ at one place and to an elec-

light and varying an electric current, it may be either in the shape of a bar *p* covering the slit *m*, as shown in Figs. 12 and 21, or that of a flat cell *p′* in Fig. 13, where the light passing through the negative or pattern D and the slit *m* is converged by the lens *p* to a focus, upon the selenium cell *p′*. Or, for producing an intermittent current it may consist of two selenium cells or bars suitably arranged as shown in Fig. 18. The same arrangement is used in connection with patterns like Figs. 4, 8 and 17 for producing alternating currents or undulating currents of alternately opposite polarity. The two cells are arranged end to end with their approximating ends at the central line 2 of the pattern strip so that one cell or bar is opposite one half of the slit *m* and the other bar or cell opposite the other half. Each cell is arranged to send whatever current flows through it in a direction opposite to that of the current from the other cell, in any well-known or suitable manner and each may be supplied with its current from different ends or sections of the same battery or from separate batteries, as shown in Figs. 30 and 33, where the two sections of the selenium are inserted in derived circuits or branches of the main circuit *w w*. In either case, the electric current is arranged to flow through the selenium by proper conducting wires and the varying quantity of light which falls upon the selenium will correspondingly vary the current flowing through it, as is well known to electricians.

A strip or pattern, like Fig. 17, thus employed, will produce an alternating current, whose changes of strength and polarity will be sudden or instantaneous—for each section of the cell will be at once lighted for the whole length of the signal or form on the strip, then as suddenly shut off from all light, and the other cell or section will be lighted and operated by the form on the opposite half of the pattern strip. A pattern like Figs. 4 or 8, however, produces the changes of strength and polarity gradually. When designed to be used with a divisional selenium cell, they should, of course, be made by a divisional shutter on the diaphragm, as shown in Fig. 30. In using such a shutter to produce negatives, it should be arranged so that the central vertical line or division of the shutter will fall on the central line of the slit *m*, which should also be made preferably in two parts in different planes, as shown by the position of *r* and *r′* in Figs. 30 or 31. When arranged as in Fig. 30, the opaque part *s* of the shutter stands between the light and the part *r′* of the slit and *s′* covers up the slit *r*, as will be understood

is evident that the action of all parts of the diaphragm will be correctly recorded on the negative and as the nodal points change from one section to another, as different sounds act on the diaphragm, so will the bulbous lines on the negative change their forms. And when they are in turn caused to vary the light thrown upon a speaking diaphragm D, Fig. 10, they will reproduce the original pulsations of diaphragm *d* with its varying nodal points and will correspond more closely to the original than would be the case if only the vibrations of the center of the diaphragm were recorded on the negative. The shutters are easily attached to the diaphragm by their centers and being inclined slightly somewhat like the slats of a window blind, similarly to the closed slats of a window blind, their edges will lap without touching each other.

It is evident that when a correct negative is once obtained perfect copies can be produced not only by photographic, but also by ordinary printing processes, or even by mechanical means at a merely nominal cost, even for the most elaborate negatives.

Having thus explained the principles of my invention, Fig. 10, represents an apparatus which I have devised for carrying out my method arranged more particularly for making negatives or patterns. At A is a roll of the prepared negative strip wound upon a bobbin which is mounted in journal bearings in any convenient way. This strip may be of any suitable thin and flexible material which may be strong fine paper, but I prefer what is known as paper parchment, although many other substances may be used. It should be covered with a thin film made very sensitive to light by any of the instantaneous processes employed in photography, although a dry process will be most convenient with this form of negative. After being properly coated and sensitized, it should be carefully dried, rolled up, and protected from light or damp until ready to use it. It may be thus coated and sensitized either before or after being cut up into strips of width suitable for use, but in the latter case, care must be taken in the cutting not to disturb the adhesion of the film to the strip. A suitable width is 1/2 or 3/4 inch and the length will, of course, be governed by convenience or the choice of the operator.

The roll A is free to turn, being held only by the spring 1 pressing upon it sufficiently to prevent it from turning faster than the strip is needed. From A the strip passes over the flanged rollers R R, Figs. 3, 4 and 10; at R′ is a rubber-faced roller which presses the paper strip between itself and R tightly enough to prevent the slipping of the strip. It also fits between the flanges of If desired, it can also press lightly on the roller A′ to assist in rewinding the strip upon it. To this roller can be applied the power which feeds the strip along before the slit *m* in the screen or partition S. For experiment or common telegraphic purposes a crank may be attached to the roller R′ or R, as shown in Fig. 10, or the strip may be otherwise fed by hand. But when accuracy is required, some motor should be employed which will give the negative a perfectly uniform and known rate of speed. These are not new and need not be described, as they form no part of my invention. The motor may be attached to or contained in the box or frame of the phonograph or otherwise connected as preferred. The strip being thus fed along at a uniform speed it is wound upon a second roller A′ or may simply be fed loosely into the bottom of the box or case of the phonograph after exposure to the varying light. It will now remain unchanged if kept from light and damp, for days or even weeks, or, on the other hand, it may be at once developed, intensified, fixed, or otherwise treated to render the image permanent,—according to the process employed or the effect desired. All of which will be at once understood by those versed in photography, who will be enabled from the foregoing description to readily make a negative strip having the characteristics required and will probably prefer the gelatino-bromid process. If the paper seems to have a greasy nature, it may, before applying bromid emulsion, be coated with four per cent. solution of white of egg to which sufficient chrome-alum has been added to give it a slight bluish tinge. This will insure the film adhering perfectly. But it will seldom be required if a good quality of paper or parchment is used. These strips being fixed, they may be treated and used in different ways. The parts acted upon by light may be made transparent and the rest blacked and rendered more opaque and the strip used by transmitting light through it; or the strip may be left opaque and used by reflected light—in which case the parts acted upon by light should be made as white or brilliant, and those not acted upon as black and absorbent of light as possible, all of which can be done by any one out of many well known ways, and detailed directions are not necessary. For example, a strip to be used by transmitted light may have the dark parts blacked with carbon-ink, flexible black varnish, or otherwise, and the lights rendered transparent by dipping in castor oil thinned with absolute alcohol. The finished strip being again wound upon the wheel or roller A and properly arranged in the phonograph, we can reproduce the original variations in the first beam of light, in another

light through it as it passes the slit. To do this, the diaphragm *d* with its shutter is removed—the upright frame which holds it being arranged to slide on a foot-piece which fits in grooves so that it may be slid into its place for use, or moved back out of the way, as desired.

Fig. 21 is a horizontal sectional or plan view of the apparatus (arranged for reproducing the sounds or phenomena recorded in the negative or pattern), and shows the shutter and diaphragm carried on the same frame or base as the telephone E*l*, which slides in grooves in the pieces *t t*, and the dotted lines show the position of the base when slid back far enough to get the shutter out of the way for our present purposes, but not admitting any light to the interior of the apparatus. The mouth-piece O is, of course, closed when thus utilizing the negative. The square chamber which contained the diaphragm is now empty or free and allows the light *l* to shine unobstructed across it to and through the slit *m* onto and through the strip which is rapidly fed before it, whereby the light which passes through the strip is varied in precisely the same manner as the original beam of light was varied by the shutter on the diaphragm *d*, *i. e.*, the greater the proportion of the strip which is transparent, the longer the beam of light which is passed through it, and vice versa (see Fig. 4). This light can now be used to produce corresponding variations or pulsations in sound, electric currents, magnetic attractions, etc., as desired. We can reconvert this varying light into sounds in different ways. It may be passed through a plano-convex or, rather, plano-cylindrical lens *p*, Fig. 10, or any suitable optical devices to widen and disperse it properly and be thrown directly upon a thin hard-rubber diaphragm D properly arranged for speaking or giving out sounds. Or, in place of the lens *p* a selenium bar or cell may be arranged to receive the light and thereby vary a current of electricity flowing through it, as shown at *p* in Fig. 21, which current may then be conducted to one of my telephones (described herein) which is substituted for the diaphragm D and the sounds will be produced by it with any desired loudness, or the current may be conducted by wire to any other instrument or place in the same way as in telegraphy and there converted into sounds or utilized for any other purposes, as in Fig. 21, where a current from D is represented as conveyed to a telephone T′ at one place and to an electrical receiver in any suitable kind E*l*′ at another place.

When selenium is used for receiving the that of a flat cell *p*′ in Fig. 13, where the light passing through the negative or pattern D and the slit *m* is converged by the lens *p* to a focus, upon the selenium cell *p*′. Or, for producing an intermittent current it may consist of two selenium cells or bars suitably arranged as shown in Fig. 18. The same arrangement is used in connection with patterns like Figs. 4, 8 and 17 for producing alternating currents or undulating currents of alternately opposite polarity. The two cells are arranged end to end with their approximating ends at the central line 2 of the pattern strip so that one cell or bar is opposite one half of the slit *m* and the other bar or cell opposite the other half. Each cell is arranged to send whatever current flows through it in a direction opposite to that of the current from the other cell, in any well-known or suitable manner and each may be supplied with its current from different ends or sections of the same battery or from separate batteries, as shown in Figs. 30 and 33, where the two sections of the selenium are inserted in derived circuits or branches of the main circuit *w w*. In either case, the electric current is arranged to flow through the selenium by proper conducting wires and the varying quantity of light which falls upon the selenium will correspondingly vary the current flowing through it, as is well known to electricians.

A strip or pattern, like Fig. 17, thus employed, will produce an alternating current, whose changes of strength and polarity will be sudden or instantaneous—for each section of the cell will be at once lighted for the whole length of the signal or form on the strip, then as suddenly shut off from all light, and the other cell or section will be lighted and operated by the form on the opposite half of the pattern strip. A pattern like Figs. 4 or 8, however, produces the changes of strength and polarity gradually. When designed to be used with a divisional selenium cell, they should, of course, be made by a divisional shutter on the diaphragm, as shown in Fig. 30. In using such a shutter to produce negatives, it should be arranged so that the central vertical line or division of the shutter will fall on the central line of the slit *m*, which should also be made preferably in two parts in different planes, as shown by the position of *r* and *r*′ in Figs. 30 or 31. When arranged as in Fig. 30, the opaque part *s* of the shutter stands between the light and the part *r*′ of the slit and *s*′ covers up the slit *r*, as will be understood from Fig. 32, where the parts are so arranged. Now, when the shutter vibrates to the right, *s*′ uncovers more or less of slit *r*,

and when moving to the left, the part r' of the slit is similarly exposed by the removal of s. The sensitive surface being fed down past the slit, a pattern is produced like Fig. 4 or 8 but with the two halves independent, and possibly, dissimilar,—each corresponding to the movements of its own half of the shutter. By now moving this pattern (when finished) past the slit again after arranging a sectional selenium cell behind it with each section of the selenium behind the corresponding section of the cell (and the shutter being now moved back out of the way) we produce alternating currents whose variations in strength and polarity will correspond to the original vibrations of the shutter and, therefore, of the force which moved it—the principle involved in making and using the pattern being precisely the same as already described. I would here remark that the method of constructing selenium cells is now well understood and any known or suitable method or arrangement may be employed.

The negative may, of course, be taken on glass instead of paper and arranged to be properly moved before the slit and light, Any suitable material may be used, whether transparent or opaque, flexible or rigid, plane or curved. When the negative strip is required to be very narrow in order to save room instead of the light falling directly upon it, the varying light beam may be received upon a lens and converged to the desired size before being thrown upon the sensitive surface. The negative in Fig. 10 would then be fed along at D instead of between p and m. Or, in Fig. 13, the negative would be at p' while receiving the photographic impression. Fig. 29 illustrates this arrangement. The light from l, after being varied by the shutter s, passes through the slit m and is converged by the lens p and then falls upon the negative P. Of course, the same arrangement may be used with a speaking diaphragm D or other suitable device substituted for the negative or sensitive surface. As the interior of the camera is thoroughly blacked, as already stated, it absorbs all superfluous light and improves the effect.

When using an opaque strip or negative, the sound waves or, rather, the variations of light produced by them are recorded in the same way as already described. But to reproduce those variations the strip is fed along with the printed or formerly sensitive side outward in the path of a beam of light by which it is powerfully illuminated and the light reflected from it is utilized instead of transmitted light. Fig. 11 shows an arrangement which may be employed [illegible] in the light

ture corresponding to the slit m which would be used with a transparent pattern and so directed toward the strip that only the light from that part of the strip which would be covered by the slit m can pass through both apertures—all of which will be readily understood by photographers. This light is then received by the lens or other suitable optical device p and properly thrown upon the diaphragm D as before. The lens p may be replaced by the selenium bar or cell and the diaphragm D by one of my telephones, etc., exactly as before described for transmitted light. The distance of the illuminating arrangement from the negative strip is merely sufficient to thoroughly light up the field covered by the tube 5. Tubes 3 and 5 may be of any suitable size, length, and material, all of which may be left to the judgment of the operator, who should arrange the apparatus according to good photographic practice. By following the directions herein given nothing more than good judgment is needed to enable any one skilled in photography to attain perfect success either in making negatives by my method for any desired purpose, or in practically using them afterward.

Instead of a negative arranged as before described, it may be made alike across its whole width and its transparency varied so as to be more or less opaque at different parts of its length. Or an opaque strip may be similarly varied from white through all the shades to black so that a given cross-section of the strip will reflect more or less light at different points. Such strips will light up the whole length of the selenium or other device all the time and operate by the varying intensity of the light instead of by varying the length of the cell exposed to light. Or the strip can be so prepared as to show analogous gradations of phosphorescence, when suitably treated, and throw out a light of greater or less strength corresponding to the variations in the beam of light originally employed in making the negative whereby it will be enabled to reproduce those variations at any time, which is the object and function of the negative or "pattern". Or, the desired effect can be attained in many other ways. But for photographic and other reasons, I prefer that the negative be made as before described, with the different portions entirely distinct and with the part that is transparent or white made as transparent or white as possible, and that part which is opaque or black made as strongly so as practicable. The pattern may be made upon a long narrow strip, as described, or arranged spirally over the

sound, word, or phrase, as long as it is turned. Fig. 27 is a strip having a single pattern or image upon it while Fig. 28 has a number of parallel images or patterns; the ends of the strip are properly cemented or fastened together.

Instead of the hard-rubber diaphragm D one of celluloid may be used, also soft vulcanized rubber, thin elastic brass, and German silver, and other materials which are capable of being vibrated or acted upon, as described, when properly exposed to the varying light or other rays. The diaphragm *d* may be made of any of the materials used in telephony, which are suitable for the employment to be made of it in this process.

The light employed for making the negative should be strongly actinic and may be direct sunlight or electric or other artificial light having sufficient actinic power for instantaneous photography. It should be arranged in a chamber W, preferably with a reflector or other means for making the rays nearly parallel, *i. e.*, into a beam suitable for the purposes of this invention, and only this beam should be admitted to the diaphragm chamber. The rays may proceed directly from *l* (Figs. 3 and 10) as a luminous center, or they may be brought to a focus at any point between *l* and the shutter *s*, as seen in Fig. 3, where *l* and *l'* represent two such foci with the method of amplifying the effects produced by the vibrating shutter—the luminous center or focus being advanced nearer to the shutter until the desired amplification is effected. The effect is practically the same, whether a luminous point is placed at *l* or a beam of rays is brought to a focus there and diverge thence sufficiently to cover the slit or slits *m* through the partition S of the diaphragm chamber. At 2, Fig. 10, they pass through a glass cell filled with alum water to stop the heat without diminishing the light. They then pass through an aperture of suitable size across the diaphragm chamber where they are manipulated by the shutter *s* and through the slit *m*, as already described. For using the negative so strong a light will not always be needed and a good kerosene lamp will answer for most ordinary purposes. Gas light is not suitable unless a steady flame can be obtained, as a flickering light will interfere with the perfection of the speaking. For purposes requiring accuracy, however, a light should be used having ample actinic power and the stronger the better. No harm can be done by having a light unnecessarily strong, as it can not be strong enough to do any harm, although proper care must, of course, be taken when the alum-water cell is not used to avoid the injury of the pattern

lent that, although not essential, its use will generally be found advantageous in making a photographic pattern and in using a pattern in connection with selenium cells. But when other substances or devices are used which are sensitive to other forms of radiant energy, its use may be needless and even objectionable as stopping the very kind of radiant force which acts upon the sensitive substance or device. It should, therefore, not be used in connection with a hard-rubber speaking diaphragm or in other cases where the heat rays are the acting force concerned. It is also found by experiment that the effect is improved by using a mirror or reflector instead of the lens *p*, Figs. 10 and 11, when the rays are intended to act upon a rubber diaphragm or other device operated by the thermal rays of the light. These hints will enable the operator to use or omit these parts according to the use he is making of the apparatus.

The whole apparatus is inclosed in a close box or casing, as shown in Figs. 10, 20, 21, and 29, to exclude external light, particularly from the negative. The light chamber W should be so tight that none of the light can penetrate the partitions around it except through the cell 2. The diaphragm chamber is also inclosed on all sides except the one facing the sounds to be recorded and the only opening on that side is through the bell or mouth-piece O conducting the sound to the center of the diaphragm. All the interior surfaces are made densely black in order to absorb and prevent the reflection of any light that may find its way inside. Suitable openings or doors are provided wherever necessary for giving access to the different parts which may be arranged to suit the convenience of the operator. This care about the light is required more especially while making the negative. For speaking purposes, much less caution is needed. When the apparatus is used to enable one light to control another and stronger one, the former is thrown upon the other side of diaphragm *d* which controls the light *l*, as illustrated in Fig. 20, where a properly varied beam of "light" from the left may act upon one side of the diaphragm *d*, which then varies the light coming from *l* by means of the mirror shown attached to its right side. It can, of course, control such light also by the usual shutter, or other devices, before described. O and O' are mouth-pieces or openings, one on each side.

When the instrument is used for speaking or playing in a large hall or in the open air, the sound, even if much louder than the original, will become inaudible at a dis-

the slit is similarly exposed by the removal of *s*. The sensitive surface being fed down past the slit, a pattern is produced like Fig. 4 or 8 but with the two halves independent, and possibly, dissimilar,—each corresponding to the movements of its own half of the shutter. By now moving this pattern (when finished) past the slit again after arranging a sectional selenium cell behind it with each section of the selenium behind the corresponding section of the cell (and the shutter being now moved back out of the way) we produce alternating currents whose variations in strength and polarity will correspond to the original vibrations of the shutter and, therefore, of the force which moved it—the principle involved in making and using the pattern being precisely the same as already described. I would here remark that the method of constructing selenium cells is now well understood and any known or suitable method or arrangement may be employed.

The negative may, of course, be taken on glass instead of paper and arranged to be properly moved before the slit and light, Any suitable material may be used, whether transparent or opaque, flexible or rigid, plane or curved. When the negative strip is required to be very narrow in order to save room instead of the light falling directly upon it, the varying light beam may be received upon a lens and converged to the desired size before being thrown upon the sensitive surface. The negative in Fig. 10 would then be fed along at D instead of between *p* and *m*. Or, in Fig. 13, the negative would be at *p'* while receiving the photographic impression. Fig. 29 illustrates this arrangement. The light from *l*, after being varied by the shutter *s*, passes through the slit *m* and is converged by the lens *p* and then falls upon the negative P. Of course, the same arrangement may be used with a speaking diaphragm D or other suitable device substituted for the negative or sensitive surface. As the interior of the camera is thoroughly blacked, as already stated, it absorbs all superfluous light and improves the effect.

When using an opaque strip or negative, the sound waves or, rather, the variations of light produced by them are recorded in the same way as already described. But to reproduce those variations the strip is fed along with the printed or formerly sensitive side outward in the path of a beam of light by which it is powerfully illuminated and the light reflected from it is utilized instead of transmitted light. Fig. 11 shows an arrangement which may be employed. *l* is the light which passes through the alum-water cell 2 through the tube 3 and illuminates the moving strip or pattern 4 or P. 5 is a tube with blackened interior, each end having an aperture used with a transparent pattern and so directed toward the strip that only the light from that part of the strip which would be covered by the slit *m* can pass through both apertures—all of which will be readily understood by photographers. This light is then received by the lens or other suitable optical device *p* and properly thrown upon the diaphragm D as before. The lens *p* may be replaced by the selenium bar or cell and the diaphragm D by one of my telephones, etc., exactly as before described for transmitted light. The distance of the illuminating arrangement from the negative strip is merely sufficient to thoroughly light up the field covered by the tube 5. Tubes 3 and 5 may be of any suitable size, length, and material, all of which may be left to the judgment of the operator, who should arrange the apparatus according to good photographic practice. By following the directions herein given nothing more than good judgment is needed to enable any one skilled in photography to attain perfect success either in making negatives by my method for any desired purpose, or in practically using them afterward.

Instead of a negative arranged as before described, it may be made alike across its whole width and its transparency varied so as to be more or less opaque at different parts of its length. Or an opaque strip may be similarly varied from white through all the shades to black so that a given cross-section of the strip will reflect more or less light at different points. Such strips will light up the whole length of the selenium or other device all the time and operate by the varying intensity of the light instead of by varying the length of the cell exposed to light. Or the strip can be so prepared as to show analogous gradations of phosphorescence, when suitably treated, and throw out a light of greater or less strength corresponding to the variations in the beam of light originally employed in making the negative whereby it will be enabled to reproduce those variations at any time, which is the object and function of the negative or "pattern". Or, the desired effect can be attained in many other ways. But for photographic and other reasons, I prefer that the negative be made as before described, with the different portions entirely distinct and with the part that is transparent or white made as transparent or white as possible, and that part which is opaque or black made as strongly so as practicable. The pattern may be made upon a long narrow strip, as described, or arranged spirally over the surface of a plate, as in Fig. 25, or a cylinder of any suitable size, shape and material, as in Fig. 26. By making it in a circular form, as in Figs. 27 and 28, and running it around, it will continue to repeat the same

pattern of image upon it while [illegible]

number of parallel images or patterns; the ends of the strip are properly cemented or fastened together.

Instead of the hard-rubber diaphragm D one of celluloid may be used, also soft vulcanized rubber, thin elastic brass, and German silver, and other materials which are capable of being vibrated or acted upon, as described, when properly exposed to the varying light or other rays. The diaphragm *d* may be made of any of the materials used in telephony, which are suitable for the employment to be made of it in this process.

The light employed for making the negative should be strongly actinic and may be direct sunlight or electric or other artificial light having sufficient actinic power for instantaneous photography. It should be arranged in a chamber W, preferably with a reflector or other means for making the rays nearly parallel, *i. e.*, into a beam suitable for the purposes of this invention, and only this beam should be admitted to the diaphragm chamber. The rays may proceed directly from *l* (Figs. 3 and 10) as a luminous center, or they may be brought to a focus at any point between *l* and the shutter *s*, as seen in Fig. 3, where *l* and *l'* represent two such foci with the method of amplifying the effects produced by the vibrating shutter—the luminous center or focus being advanced nearer to the shutter until the desired amplification is effected. The effect is practically the same, whether a luminous point is placed at *l* or a beam of rays is brought to a focus there and diverge thence sufficiently to cover the slit or slits *m* through the partition S of the diaphragm chamber. At 2, Fig. 10, they pass through a glass cell filled with alum water to stop the heat without diminishing the light. They then pass through an aperture of suitable size across the diaphragm chamber where they are manipulated by the shutter *s* and through the slit *m*, as already described. For using the negative so strong a light will not always be needed and a good kerosene lamp will answer for many ordinary purposes. Gas light is not suitable unless a steady flame can be obtained, as a flickering light will interfere with the perfection of the speaking. For purposes requiring accuracy, however, a light should be used having ample actinic power and the stronger the better. No harm can be done by having a light unnecessarily strong, as it can not be strong enough to do any harm, although proper care must, of course, be taken when the alum-water cell is not used to avoid the injury of the pattern or other device by the heat rays contained in the light. And I would here remark with regard to the alum-water cell or its equivalent in connection with selenium cells. But when other substances or devices are used which are sensitive to other forms of radiant energy, its use may be needless and even objectionable as stopping the very kind of radiant force which acts upon the sensitive substance or device. It should, therefore, not be used in connection with a hard-rubber speaking diaphragm or in other cases where the heat rays are the acting force concerned. It is also found by experiment that the effect is improved by using a mirror or reflector instead of the lens *p*, Figs. 10 and 11, when the rays are intended to act upon a rubber diaphragm or other device operated by the thermal rays of the light. These hints will enable the operator to use or omit these parts according to the use he is making of the apparatus.

The whole apparatus is inclosed in a close box or casing, as shown in Figs. 10, 20, 21, and 29, to exclude external light, particularly from the negative. The light chamber W should be so tight that none of the light can penetrate the partitions around it except through the cell 2. The diaphragm chamber is also inclosed on all sides except the one facing the sounds to be recorded and the only opening on that side is through the bell or mouth-piece O conducting the sound to the center of the diaphragm. All the interior surfaces are made densely black in order to absorb and prevent the reflection of any light that may find its way inside. Suitable openings or doors are provided wherever necessary for giving access to the different parts which may be arranged to suit the convenience of the operator. This care about the light is required more especially while making the negative. For speaking purposes, much less caution is needed. When the apparatus is used to enable one light to control another and stronger one, the former is thrown upon the other side of diaphragm *d* which controls the light *l*, as illustrated in Fig. 20, where a properly varied beam of "light" from the left may act upon one side of the diaphragm *d*, which then varies the light coming from *l* by means of the mirror shown attached to its right side. It can, of course, control such light also by the usual shutter, or other devices, before described. O and O' are mouth-pieces or openings, one on each side.

When the instrument is used for speaking or playing in a large hall or in the open air, the sound, even if much louder than the original, will become inaudible at a distance from the phonograph. If desired to extend the area over which the speech, music, or other sound will be heard, it can be done

and to any extent by taking sounds off from different portions of the negative or strip at the same time. For example, if the music is indistinctly heard at a distance of 100 feet from the phonograph, I reinforce it so as to be as loud as at the instrument itself by taking the sound off from the negative strip through a second slit below the other. We know that sound travels in air about 1100 feet per second. It would be heard at a distance of 100 feet or 1/11 second later than at the instrument. In order to send on a fresh sound and have it arrive there at the same time as the original sound so that there may be no interference between the weakened original sound and the powerful new sound, but both may join and coincide we take the new sound from the strip 1/11 second later than the original. If the strip travels eleven inches per second, we simply adjust the second slit m' just one inch below the other m, Figs. 14, 22, 23, 24, arrange the light to shine through both slits at once, receive the light from m' upon a selenium bar or bars, conduct the current to the point where the sound needs reinforcing, and there convert it into sound by one of my telephones or any other suitable arrangement. It is evident that any given part of the strip will pass the slit m' 1/11 second after it passes m and the same with any other distance. The strip is not really fed along so rapidly, but the proportion should be the same between the actual speed per second and the distance to be covered. Should it be desired to again reinforce the sound, say, 75 feet farther on, we add another slit and selenium m^2 3/4 inch below m' and so on indefinitely. In this way, the speech or music from my instrument can be extended over as large an area as desired and in all directions so as to be perfectly heard in every part. One selenium bar is capable of carrying a number of different currents at once, each one sufficiently powerful to operate a loud-speaking telephone or analogous apparatus and each one will be similarly and simultaneously acted on by the varying beam of light and varied correspondingly by the selenium bar or cell. Fig. 22 is a diagram of the arrangement and electrical connections. The light which passes through the slit m produces the first or original sound at the instrument or any central position preferred, as by a loud sound-producing apparatus at T. The light passing through the next slit m' acts upon a selenium or other current-controlling device and sends out currents which will reinforce the original sound at the distance, say, different points as desired—shown as four—by currents produced by the light which passes through the third slit m^2 and acts upon a current-controlling device p^2, through which flow the currents which actuate the sound-producing apparatus at the stations 1, 2, 3, 4.

The current from the cell at the second slit m' is shown as passed through the primary wire of an induction coil I, the secondary coil of which sends an induced current through the different sound-producing apparatus shown as arranged to be each actuated by a division of the current. The entire current may, of course, be sent through all the instruments in succession. So also can a single current from the cell p^2 be sent through all the instruments in the circle x' x'—instead of arranging a separate current for each and controlling all of the currents by the cell p^2, as shown.

5, 6, 7, 8, are the points where the two circuits are divided into branch circuits; but the main circuits need not be divided at all, but each one may extend to and connect directly with the cell p^2 or coil I.

Any suitable electrical connections and any suitable form of currents may be employed as well understood by electricians. For such purposes, a slider or composer is arranged in the partition S, Figs. 10 and 22, having the slit m at the top and others arranged at the desired distances below. A separate slider can be inserted for any new modification in the distances to be allowed for. If great accuracy is required in meeting some special case, the slits may be formed in movable pieces, which can be adjusted to and from m by screws with any desired minuteness, as shown in Figs. 23 and 24. In the former the slide S has marks along its edges for adjusting the position of the pieces carrying the slits which are then secured by the screws as shown. In Fig. 24 the slitted pieces are adjusted to and from m by screws through their ends held by a ridge level with the slit m. When the currents are to be sent to a distance or not to be heard simultaneously no such care is needed, but any desired number of slits can be used, and at any convenient distance apart, each with its selenium or analogous device, and each selenium can conduct and control a number of separate currents thus multiplying the number of separate currents that may be simultaneously taken off one strip or negative indefinitely.

In Fig. 15 several slits are shown through the partition or slider S. The bottom one

one above throws the light upon the lens or other device p, which spreads or causes it to properly cover the diaphragm D for speaking. The two slits above illuminate two selenium bars, with their conducting wires for sending the currents to different instruments or places. At the top is shown the arrangement for speaking by reflected light. The slits may be arranged and used in any manner desired.

Instead of using the lights from the different slits for different purposes, as shown, the slits may all have selenium bars or cells behind them, or the lights passing through them may be utilized for any purposes desired.

Each bar or cell should be so inclosed as to protect it from all light except what comes to it through its slit. When any selenium is not wanted for use, its slit can be covered with a slide, as in Fig. 10, where only the central slit is used while making a negative or pattern, the slits above and below that being closed by their slides. In Fig. 22 the slit m^2 is shown with its slide in position ready to be shoved down and cover the slit, or the selenium merely disconnected from the line or conducting wires, or by opening the circuit. When quite a number of slits are to be used at once, they may be arranged in a curve with the light in the center and the paper strip rest on a curved glass surface to support it and keep it in position. This curved form of slider is seen in Fig. 22. In this case the side of the strip which carries the image should be outside to avoid rubbing it over the glass. It will, therefore, be seen that I can at the same time convert the forms recorded on the negative into sounds and transmit them elsewhere; I can transmit them to any desired number of places simultaneously; or I can take off the sounds any desired number of times and reproduce them with any desired intervals of time between the successive series or repetitions of the sounds, signals, or other phenomena which are being reproduced, or I can convert the varying light which passes through into any desired number of correspondingly varying electric currents, each having any desired strength, and each of which can be utilized for any desired purpose.

By arranging the diaphragm d, or its shutter s, to be operated manually, feeding the strip slowly and vibrating the shutter in a manner similar to that used in sending the ordinary Morse signals with the ordinary key, the result would be a strip like Fig. 16, with transparent lines across it. The shutter can of course be actually connected to the

producing alternating currents. The parts s and s' are opaque, the rest of the shutter transparent. The black bodies r and r' represent the two sections of the slit m which are normally covered or protected by the opaque portions s and s'. But when the key K is operated to move the shutter to the right it uncovers the section r, and vice versa, thus producing the pattern precisely as already described, only it is now done manually instead of automatically. By arranging the shutter like Figs. 5 and 32, to be moved in both directions from the center and to different distances for the different letters or signals, a strip like Fig. 17 would be made. Fig. 32 shows the key or lever K for moving the shutter, the proper distances being indicated by the scale y^2. The springs $y\ y$ keep it normally in its central position and when moved to either side it uncovers one of the sections of the slit m precisely as described for Fig. 31 and the farther the key is turned on its central pivot the more of the slits or openings are uncovered by the shutter and the greater the length of the beam of light allowed to pass through to the sensitive surfaces behind the slit. Or the pattern strip could be punched out or otherwise produced by hand in the manner now practised for automatic telegraphing. Such a strip prepared in either way can then be run through my instrument at almost unlimited speed and the signals will be perfectly produced by the light being varied during its passage through the strip and then falling on two selenium bars or strips or other current-controlling devices arranged behind the slit m, producing correspondingly varying currents, which are then sent over the line or other currents induced by them sent instead to another phonograph or to one of my telephones or other apparatus, as shown at E^1 in Fig. 33, where P is the pattern or strip moving past the slit m in the partition, S, and r and r' represent the two sections of the slit with the sectional current-controlling device arranged behind it—each section, when lighted, sending a current of opposite polarity through the circuit. When the speed is so great that the sounds or signals are unintelligible to the eye or ear at the receiving station they may first be recorded by one of my phonographs and the negative so prepared be then run through another phonograph, (or telephone), at the ordinary speed. In this way, the line wire can be utilized to its utmost capacity in speed for conveying the messages which may require a number of instruments to afterward speak or deliver them in

and to any extent by taking sounds off from different portions of the negative or strip at the same time. For example, if the music is indistinctly heard at a distance of 100 feet from the phonograph, I reinforce it so as to be as loud as at the instrument itself by taking the sound off from the negative strip through a second slit below the other. We know that sound travels in air about 1100 feet per second. It would be heard at a distance of 100 feet or 1/11 second later than at the instrument. In order to send on a fresh sound and have it arrive there at the same time as the original sound so that there may be no interference between the weakened original sound and the powerful new sound, but both may join and coincide we take the new sound from the strip 1/11 second later than the original. If the strip travels eleven inches per second, we simply adjust the second slit m' just one inch below the other m, Figs. 14, 22, 23, 24, arrange the light to shine through both slits at once, receive the light from m' upon a selenium bar or bars, conduct the current to the point where the sound needs reinforcing, and there convert it into sound by one of my telephones or any other suitable arrangement. It is evident that any given part of the strip will pass the slit m' 1/11 second after it passes m and the same with any other distance. The strip is not really fed along so rapidly, but the proportion should be the same between the actual speed per second and the distance to be covered. Should it be desired to again reinforce the sound, say, 75 feet farther on, we add another slit and selenium m^2 3/4 inch below m' and so on indefinitely. In this way, the speech or music from my instrument can be extended over as large an area as desired and in all directions so as to be perfectly heard in every part. One selenium bar is capable of carrying a number of different currents at once, each one sufficiently powerful to operate a loud-speaking telephone or analogous apparatus and each one will be similarly and simultaneously acted on by the varying beam of light and varied correspondingly by the selenium bar or cell. Fig. 22 is a diagram of the arrangement and electrical connections. The light which passes through the slit m produces the first or original sound at the instrument or any central position preferred, as by a loud sound-producing apparatus at T. The light passing through the next slit m' acts upon a selenium or other current-controlling device and sends out currents which will reinforce the original sound at the distance, say, of the circle x—x, where it is shown as reinforced at three different points in that circle. These second sounds are reinforced at the next stage or circle x' x', at as many different points as desired—shown as four—by currents produced by the light which passes through the third slit m^2 and acts upon a current-controlling device p^2, through which flow the currents which actuate the sound-producing apparatus at the stations 1, 2, 3, 4.

The current from the cell at the second slit m' is shown as passed through the primary wire of an induction coil I, the secondary coil of which sends an induced current through the different sound-producing apparatus shown as arranged to be each actuated by a division of the current. The entire current may, of course, be sent through all the instruments in succession. So also can a single current from the cell p^2 be sent through all the instruments in the circle x' x'—instead of arranging a separate current for each and controlling all of the currents by the cell p^2, as shown.

5, 6, 7, 8, are the points where the two circuits are divided into branch circuits; but the main circuits need not be divided at all, but each one may extend to and connect directly with the cell p^2 or coil I.

Any suitable electrical connections and any suitable form of currents may be employed as well understood by electricians. For such purposes, a slider or composer is arranged in the partition S, Figs. 10 and 22, having the slit m at the top and others arranged at the desired distances below. A separate slider can be inserted for any new modification in the distances to be allowed for. If great accuracy is required in meeting some special case, the slits may be formed in movable pieces, which can be adjusted to and from m by screws with any desired minuteness, as shown in Figs. 23 and 24. In the former the slide S has marks along its edges for adjusting the position of the pieces carrying the slits which are then secured by the screws as shown. In Fig. 24 the slitted pieces are adjusted to and from m by screws through their ends held by a ridge level with the slit m. When the currents are to be sent to a distance or not to be heard simultaneously no such care is needed, but any desired number of slits can be used, and at any convenient distance apart, each with its selenium or analogous device, and each selenium can conduct and control a number of separate currents thus multiplying the number of separate currents that may be simultaneously taken off one strip or negative indefinitely.

In Fig. 15 several slits are shown through the partition or slider S. The bottom one throws its light on a lens which concentrates it to a focus on a selenium cell, as shown, which is connected with a telephone by the conducting wires as usual. The next

one above throws the light upon the lens or other device p, which spreads or causes it to properly cover the diaphragm D for speaking. The two slits above illuminate two selenium bars, with their conducting wires for sending the currents to different instruments or places. At the top is shown the arrangement for speaking by reflected light. The slits may be arranged and used in any manner desired.

Instead of using the lights from the different slits for different purposes, as shown, the slits may all have selenium bars or cells behind them, or the lights passing through them may be utilized for any purposes desired.

Each bar or cell should be so inclosed as to protect it from all light except what comes to it through its slit. When any selenium is not wanted for use, its slit can be covered with a slide, as in Fig. 10, where only the central slit is used while making a negative or pattern, the slits above and below that being closed by their slides. In Fig. 22 the slit m^2 is shown with its slide in position ready to be shoved down and cover the slit, or the selenium merely disconnected from the line or conducting wires, or by opening the circuit. When quite a number of slits are to be used at once, they may be arranged in a curve with the light in the center and the paper strip rest on a curved glass surface to support it and keep it in position. This curved form of slider is seen in Fig. 22. In this case the side of the strip which carries the image should be outside to avoid rubbing it over the glass. It will, therefore, be seen that I can at the same time convert the forms recorded on the negative into sounds and transmit them elsewhere; I can transmit them to any desired number of places simultaneously; or I can take off the sounds any desired number of times and reproduce them with any desired intervals of time between the successive series or repetitions of the sounds, signals, or other phenomena which are being reproduced, or I can convert the varying light which passes through into any desired number of correspondingly varying electric currents, each having any desired strength, and each of which can be utilized for any desired purpose.

By arranging the diaphragm d, or its shutter s, to be operated manually, feeding the strip slowly and vibrating the shutter in a manner similar to that used in sending the ordinary Morse signals with the ordinary key, the result would be a strip like Fig. 16, with transparent lines across it. The shutter can, of course, be actually arranged on a sort of key and be vibrated manually before the slit m to intercept the light properly. Fig. 31 shows this device adapted for

s and s' are opaque, the rest of the shutter transparent. The black bodies r and r' represent the two sections of the slit m which are normally covered or protected by the opaque portions s and s'. But when the key K is operated to move the shutter to the right it uncovers the section r, and vice versa, thus producing the pattern precisely as already described, only it is now done manually instead of automatically. By arranging the shutter like Figs. 5 and 32, to be moved in both directions from the center and to different distances for the different letters or signals, a strip like Fig. 17 would be made. Fig. 32 shows the key or lever K for moving the shutter, the proper distances being indicated by the scale y^2. The springs y y keep it normally in its central position and when moved to either side it uncovers one of the sections of the slit m precisely as described for Fig. 31 and the farther the key is turned on its central pivot the more of the slits or openings are uncovered by the shutter and the greater the length of the beam of light allowed to pass through to the sensitive surfaces behind the slit. Or the pattern strip could be punched out or otherwise produced by hand in the manner now practised for automatic telegraphing. Such a strip prepared in either way can then be run through my instrument at almost unlimited speed and the signals will be perfectly produced by the light being varied during its passage through the strip and then falling on two selenium bars or strips or other current-controlling devices arranged behind the slit m, producing correspondingly varying currents, which are then sent over the line or other currents induced by them sent instead to another phonograph or to one of my telephones or other apparatus, as shown at El in Fig. 33, where P is the pattern or strip moving past the slit m in the partition, S, and r and r' represent the two sections of the slit with the sectional current-controlling device arranged behind it—each section, when lighted, sending a current of opposite polarity through the circuit. When the speed is so great that the sounds or signals are unintelligible to the eye or ear at the receiving station they may first be recorded by one of my phonographs and the negative so prepared be then run through another phonograph, (or telephone), at the ordinary speed. In this way, the line wire can be utilized to its utmost capacity in speed for conveying the messages which may require a number of instruments to afterward speak or deliver them in the usual manner. Several currents may be conducted through the seleniums and so manipulated and transmitted simultaneously to different points.

Fig. 18 represents the arrangement for transmitting signals by said strips with a single long slit *m* in the phonograph except that the strip or negative P is fed past the slit *m* transversely instead of lengthwise of it as it would appear to be in the drawing. *m* is the narrow slit long enough to cover the length of the two selenium bars *p* and *p'*, each being inclosed and protected from all light except that which passes through the slit and the negative strip P. Each bar has proper wires to conduct the current through it which are so connected up that each bar directs the current which flows in it through the line in an opposite direction, and their resistances are such that no current (or a very slight one) flows through either of them as long as they are kept in the dark. But immediately that the negative strip admits light to either bar, its resistance is lessened and the current flows through that bar to the line or to the primary coil of an inductorium which sends the induced current to line or to any other device as the case may be—the strength of the current being in proportion to the length of the bar, thereby exposed to the light. The electrical connections are, as more fully shown in Fig. 33, or they may be arranged in any other suitable or well-known manner. The longer the transparent part of the strip or signal, the more of the bar is lighted up, and the stronger the current which flows through it. When the other bar is illuminated the same effect is produced but the current is sent through the line or circuit in the opposite direction—all of which will be readily comprehended and effected by electricians. My method and apparatus for producing pattern strips and converting the forms or signals into corresponding variations in electric currents are, therefore, peculiarly adapted for automatic telegraphy as well as automatic telephony—*i. e.*, transmitting telephonic messages by means of such records instead of by the original sounds—which latter, I believe, is something hitherto unknown.

When similar signals are recorded on the negative by means of a shutter like the upper one in Fig. 5, they will appear on the opaque strip, as shown in Fig. 19. These strips, as well as those before described, can be read by passing them along under a properly marked scale, the direction and different distances from the central line indicating the different letters. If this strip is fed through the phonograph at the proper speed the signals will be transmitted as above described and received in the same way by any consisting of ciphers or arbitrary characters of any kind which may be unknown to any but the sender can be similarly recorded on the negative and transmitted by the phonograph to destination where they can be correctly received and printed either by my telephone or phonograph. And it will be observed that the most secret or complicated signals can be thus sent and received without the possibility of a mistake during transmission for the reason that the operators have nothing to do with the transmission except to keep the mechanism in order—the whole of the work being done automatically by the phonograph.

By having several operators sound their messages into the diaphragm *d* of the phonograph at once, but each in a different tone, the whole of them will be recorded on the negative in one composite sound wave or curve, which will then be transmitted by the phonograph as one message over the line.

As my phonograph can convert all kinds of sounds into currents as strong as are used in any of the ordinary systems of signal telegraphing, it will transmit speech as far and as certainly as the usual signals are sent and much farther than has before been practicable. And as my "telephone" can operate with currents of such strength as would be totally unsuited for the ordinary telephones and microphones, it can be connected in the circuit or at the end of the line from the phonograph in any well-known or suitable way and the combined apparatus can then transmit, relay, and send on sounds in the same way as is now done in signaling, and they can be so repeated and sent on as often and as far as ordinary telegraphic signals can be—which also is a result never before accomplished, so far as I am aware. Fig. 34 illustrates one way of embodying this arrangement. The current, after being manipulated by the pattern P and the controlling device *p* flows through the primary wire of the induction coil I, whose secondary wire sends a current to line. But the original current from *p* may, of course, be sent over the line. *El* *El* represent my telephonic apparatus used for the translating or repeating telephonic and phonographic messages or currents till the final stage, where they are reproduced as sound by the telephone T or otherwise utilized. Batteries may be inserted in the different stages, if desired. In short, by the use of my "phonograph" in connection with my "telephone" I not only raise telephony to the same level with other branches of telegraph-

make negatives of the sounds or signals transmitted to it over the line in connection with the telephone. This arrangement is shown in Fig. 21 (also in Fig. 37). The telephone is designated by E*l*, the base of which slides in the cleats *t t* to the position shown by the dotted lines at its ends. *c c* are the suspension wires running to the cross piece *u* which is attached to the diaphragm *d* which is carried by the base of the telephone and, consequently, moves with the binding posts at the other ends of the wires *c c* when the diaphragm and shutter are to be moved back out of the way—thus avoiding any disarrangement of the telephonic adjustments thereby. *g* is the armature carried by the wires with its shutter, *l'* is the light and r^2 is the current-controlling device belonging to the telephone. T is the telephone, telegraphic instrument, or other apparatus which transmits sounds, electrical impulses, or signals from a distance to the telephonic devices E*l* by means of which those influences are enabled to actuate the phonograph and produce records or "patterns" thereof as already described. The same apparatus E*l* can, of course, be employed for transmitting messages, etc., as well as for receiving them. The phonograph can, therefore, remain in the office and the speech, music, or signals be transmitted to it by telephone for record and preservation. All messages, either received or transmitted, whether in sounds or signals, can be thus recorded and the record be either preserved or used for repeating the messages without a possibility of error in so doing. Such a record will be as positive proof of the exact tenor of the message sent or received in any court as a photograph recording any event or scene.

A last will or testament, or a dying man's deposition, or statements, may be perfectly recorded and when needed for evidence, they can be reproduced exactly as originally spoken, and then by using a stronger light or current can be repeated as loudly as desired without altering a single tone or modulation of the words. By using a sensitive diaphragm or telephone in connection with a strong light sounds ordinarily inaudible may be clearly recorded and reproduced identical in every respect except that of being louder and this strengthening of the sounds may be carried to any extent desired, as hereinbefore fully explained.

When the phonograph is driven by an artificial motor, it is arranged with a catch or stop piece which is lifted out when any sound is to be recorded and dropped again to stop the motor and strip when done, as roller A', which draws the negative strip P down over the rollers R R, as previously explained. On the same shaft as A' and moving with it is the notched wheel *v;* and L is a latch which is drawn down by the spring *y* and catches in the stop-wheel *v* except when prevented. As long as L is held up the negative strip P will be fed onto the roller A' by the action of the belt B; but when L drops, a pawl upon it catches into the stop wheel *v* and arrests the mechanism. The latch may be raised and dropped manually or automatically. The figures show an arrangement which may operate both ways. In Fig. 35 an electromagnet M' is arranged to lift the latch L whenever a current is sent through it and is in the circuit of a suitable battery and a selenium cell p^2 arranged at the edge of the slit *m* and so placed that it is normally protected from the light by the shutter *s*. But when the shutter vibrates, it exposes p^2 to the light from *l;* the current then flows through the circuit; and the magnet M' lifts the latch L, liberating the driving mechanism which thereupon feeds the negative strip past the slit *m* until the sound or other influence ceases. The latch L is then dropped by the shutter ceasing to vibrate and thereby shutting the light from p^2 and stopping the current through the magnet. In Fig. 36 is the arrangement which may be employed when the telephone E*l* is connected with the phonograph. When a sound current or signal is transmitted the armature *g* vibrates and a light lever *g'* attached to it will lift the latch L and keep it out of the notches as long as the armature *g* continues to vibrate. Either of these arrangements may be used whereby this sound itself will release the motor and so feed the negative along as long as the sound continues, and stop it when the sound ceases. Such arrangements are in use for other purposes and any suitable one may be employed in connection with my phonograph. With this arrangement the phonograph can be used for many purposes otherwise impracticable. It can even be set up in any room or place and left by itself and will record whatever sounds or messages there are as long as the negative or motor continues unexhausted. This is also a useful arrangement for telegraphing purposes, as it continues to act while dispensing for a time with the presence of the operator.

When the expansion wires of the telephone are connected with the diaphragm *d* of the phonograph, as before referred to, the negative can record not only sounds but variations in the direction and strength of electric currents or in the attractive power

Fig. 18 represents the arrangement for transmitting signals by said strips with a single long slit *m* in the phonograph except that the strip or negative P is fed past the slit *m* transversely instead of lengthwise of it as it would appear to be in the drawing. *m* is the narrow slit long enough to cover the length of the two selenium bars *p* and *p'*, each being inclosed and protected from all light except that which passes through the slit and the negative strip P. Each bar has proper wires to conduct the current through it which are so connected up that each bar directs the current which flows in it through the line in an opposite direction, and their resistances are such that no current (or a very slight one) flows through either of them as long as they are kept in the dark. But immediately that the negative strip admits light to either bar, its resistance is lessened and the current flows through that bar to the line or to the primary coil of an inductorium which sends the induced current to line or to any other device as the case may be—the strength of the current being in proportion to the length of the bar, thereby exposed to the light. The electrical connections are, as more fully shown in Fig. 33, or they may be arranged in any other suitable or well-known manner. The longer the transparent part of the strip or signal, the more of the bar is lighted up, and the stronger the current which flows through it. When the other bar is illuminated the same effect is produced but the current is sent through the line or circuit in the opposite direction—all of which will be readily comprehended and effected by electricians. My method and apparatus for producing pattern strips and converting the forms or signals into corresponding variations in electric currents are, therefore, peculiarly adapted for automatic telegraphy as well as automatic telephony—*i. e.*, transmitting telephonic messages by means of such records instead of by the original sounds—which latter, I believe, is something hitherto unknown.

When similar signals are recorded on the negative by means of a shutter like the upper one in Fig. 5, they will appear on the opaque strip, as shown in Fig. 19. These strips, as well as those before described, can be read by passing them along under a properly marked scale, the direction and different distances from the central line indicating the different letters. If this strip is fed through the phonograph at the proper speed the signals will be transmitted as above described and received in the same way by my telephone or any other suitable instrument. It should be understood that my "telephone" is an instrument capable of use for every variety of telegraphing as well as telephoning and for many other purposes. Signals consisting of ciphers or arbitrary characters of any kind which may be unknown to any but the sender can be similarly recorded on the negative and transmitted by the phonograph to destination where they can be correctly received and printed either by my telephone or phonograph. And it will be observed that the most secret or complicated signals can be thus sent and received without the possibility of a mistake during transmission for the reason that the operators have nothing to do with the transmission except to keep the mechanism in order—the whole of the work being done automatically by the phonograph.

By having several operators sound their messages into the diaphragm *d* of the phonograph at once, but each in a different tone, the whole of them will be recorded on the negative in one composite sound wave or curve, which will then be transmitted by the phonograph as one message over the line.

As my phonograph can convert all kinds of sounds into currents as strong as are used in any of the ordinary systems of signal telegraphing, it will transmit speech as far and as certainly as the usual signals are sent and much farther than has before been practicable. And as my "telephone" can operate with currents of such strength as would be totally unsuited for the ordinary telephones and microphones, it can be connected in the circuit or at the end of the line from the phonograph in any well-known or suitable way and the combined apparatus can then transmit, relay, and send on sounds in the same way as is now done in signaling, and they can be so repeated and sent on as often and as far as ordinary telegraphic signals can be—which also is a result never before accomplished, so far as I am aware. Fig. 34 illustrates one way of embodying this arrangement. The current, after being manipulated by the pattern P and the controlling device *p* flows through the primary wire of the induction coil I, whose secondary wire sends a current to line. But the original current from *p* may, of course, be sent over the line. *El El* represent my telephonic apparatus used for the translating or repeating telephonic and phonographic messages or currents till the final stage, where they are reproduced as sound by the telephone T or otherwise utilized. Batteries may be inserted in the different stages, if desired. In short, by the use of my "phonograph" in connection with my "telephone" I not only raise telephony to the same level with other branches of telegraphing but I make a great advance in the whole art of telegraphy. But that is not all that they can do. By suitably attaching the expansion wires of my telephone to the diaphragm *d* of the phonograph instead of to its own diaphragm *d*, my phonograph will

with the telephone. This arrangement is shown in Fig. 21 (also in Fig. 37). The telephone is designated by E*l*, the base of which slides in the cleats *t t* to the position shown by the dotted lines at its ends. *c c* are the suspension wires running to the cross piece *u* which is attached to the diaphragm *d* which is carried by the base of the telephone and, consequently, moves with the binding posts at the other ends of the wires *c c* when the diaphragm and shutter are to be moved back out of the way—thus avoiding any disarrangement of the telephonic adjustments thereby. *g* is the armature carried by the wires with its shutter, *l'* is the light and r^3 is the current-controlling device belonging to the telephone. T is the telephone, telegraphic instrument, or other apparatus which transmits sounds, electrical impulses, or signals from a distance to the telephonic devices E*l* by means of which those influences are enabled to actuate the phonograph and produce records or "patterns" thereof as already described. The same apparatus E*l* can, of course, be employed for transmitting messages, etc., as well as for receiving them. The phonograph can, therefore, remain in the office and the speech, music, or signals be transmitted to it by telephone for record and preservation. All messages, either received or transmitted, whether in sounds or signals, can be thus recorded and the record be either preserved or used for repeating the messages without a possibility of error in so doing. Such a record will be as positive proof of the exact tenor of the message sent or received in any court as a photograph recording any event or scene.

A last will or testament, or a dying man's deposition, or statements, may be perfectly recorded and when needed for evidence, they can be reproduced exactly as originally spoken, and then by using a stronger light or current can be repeated as loudly as desired without altering a single tone or modulation of the words. By using a sensitive diaphragm or telephone in connection with a strong light sounds ordinarily inaudible may be clearly recorded and reproduced identical in every respect except that of being louder and this strengthening of the sounds may be carried to any extent desired, as hereinbefore fully explained.

When the phonograph is driven by an artificial motor, it is arranged with a catch or stop piece which is lifted out when any sound is to be recorded and dropped again to stop the motor and strip when done, as shown in Figs. 35 and 36, where the belt B conveys motive force to the phonograph from any suitable driving mechanism or motor turning a pulley on the shaft of the

plained. On the same shaft as A' and moving with it is the notched wheel *v;* and L is a latch which is drawn down by the spring *y* and catches in the stop-wheel *v* except when prevented. As long as L is held up the negative strip P will be fed onto the roller A' by the action of the belt B; but when L drops, a pawl upon it catches into the stop wheel *v* and arrests the mechanism. The latch may be raised and dropped manually or automatically. The figures show an arrangement which may operate both ways. In Fig. 35 an electromagnet M' is arranged to lift the latch L whenever a current is sent through it and is in the circuit of a suitable battery and a selenium cell p^3 arranged at the edge of the slit *m* and so placed that it is normally protected from the light by the shutter *s*. But when the shutter vibrates, it exposes p^3 to the light from *l;* the current then flows through the circuit; and the magnet M' lifts the latch L, liberating the driving mechanism which thereupon feeds the negative strip past the slit *m* until the sound or other influence ceases. The latch L is then dropped by the shutter ceasing to vibrate and thereby shutting the light from p^3 and stopping the current through the magnet. In Fig. 36 is the arrangement which may be employed when the telephone E*l* is connected with the phonograph. When a sound current or signal is transmitted the armature *g* vibrates and a light lever *g'* attached to it will lift the latch L and keep it out of the notches as long as the armature *g* continues to vibrate. Either of these arrangements may be used whereby this sound itself will release the motor and so feed the negative along as long as the sound continues, and stop it when the sound ceases. Such arrangements are in use for other purposes and any suitable one may be employed in connection with my phonograph. With this arrangement the phonograph can be used for many purposes otherwise impracticable. It can even be set up in any room or place and left by itself and will record whatever sounds or messages there are as long as the negative or motor continues unexhausted. This is also a useful arrangement for telegraphing purposes, as it continues to act while dispensing for a time with the presence of the operator.

When the expansion wires of the telephone are connected with the diaphragm *d* of the phonograph, as before referred to, the negative can record not only sounds but variations in the direction and strength of electric currents or in the attractive power of magnets or changes of temperature. It will also record the comparative strength of two different electric currents, showing precisely when either one became the stronger,

which, and how much so. It will record changes in the intensity of light and in fine, it will record all the phenomena which the "telephone" is capable of being affected by. In turn, it can reproduce the actions of the telephone caused by those phenomena or the phenomena themselves, not only in their original strength, but amplified or strengthened without otherwise changing them.

For some purposes, it may be advisable, while making the negative, to substitute that with its slit *m* for the selenium devices of the telephone and record the variations of the light as they are produced, as shown at P in Fig. 37. For instance, the negative could be substituted in place of the cell r^2 in Fig. 21, and record the variations of the light *l'* produced by the vibrations of the armature *g* with its shutter. This arrangement is more fully shown in Fig. 37, where the strip P is seen arranged behind the slit *m* and exposed to the light from *l'*, which is varied by the shutter *s'*. This will ordinarily be the best way for strengthening light pulsations. As the vibrations of the shutter on the armature *g* are much more ample than those of the shutter on the diaphragm *d* under the action of the same sound, current or other influence. One way of doing this is illustrated in Fig. 37, where the light from *l* varied by the shutter on *d* is thrown on the selenium cell *p*, and the current thus produced is let through the thermal wires *c c* of the telephone, causing a considerable increase in the vibration of the armature *g* with its shutter *s'*. This produces more marked variations in the light from *l'* which, thus strengthened or amplified, are then recorded on the negative strip P.

There are very many other uses for which my apparatus may be employed, but it is unnecessary to enumerate them, as the directions herein given will enable those versed in photography, electricity, and acoustics, to practise any of them.

It will, of course, be understood that I do not confine myself to the precise details of the construction or arrangement of my apparatus as herein set forth, for there are many ways in which they may be modified without changing or departing from the principles of my invention. I am aware that it is not new to produce photographic impressions of telegraphic messages arriving over a line, such impressions not being capable of reproducing said messages again. Such a process is merely one way of printing the telegraphic messages received, but such prints are of no value for the purposes of electrical impulses of "patterns" or devices which are adapted to reproduce such impulses whenever desired. I, therefore, do not claim a process for printing telegraphic messages by photography, which has for its object and result the production of prints that have no function, use, or value, except as copies of the messages received and so printed as aforesaid.

Fig. 38 shows the general arrangement of the apparatus in more detail than Fig. 10. When in use the works are shut in by tight doors, as in Fig. 45, where O is the mouth piece through which vocal or other sounds are thrown on the diaphragm D. This mouth piece may be a deep bell-shaped cavity directly over the diaphragm or be fitted to the face and be connected by a tube ending over the diaphragm. The effect is much increased by having the mouth piece fit closely to the face of the speaker. *El* represents an electrical apparatus capable of vibrating the diaphragm D when a telephonic, telegraphic or other suitable current is passed through it and thereby vibrating the shutter *s* placed in the path of the beam of radiant rays from *l* here shown as an electric lamp, and thus varying said beam in accordance with the extent and character of its own movements. The beam thus varied is in the first instance thrown upon the sensitized strip P fed down from reel A over guide roller R before the opening or slit *m* on to another reel A'. The strip having been properly treated to bring out and fix the image thus obtained and render it suitable for use as a pattern, as before described, it is again wound upon reel A and its end hooked to reel A'. The apparatus *El* is moved back far enough to take shutter *s* out of the beam of radiant rays which then pass through the negative and are varied thereby as they had been previously varied by the shutter *s*, after which they fall upon a selenium cell or other suitable apparatus *p'*, all as heretofore explained.

Fig. 39 is a horizontal section through the lines *x—x* of Fig. 38, showing the light and lenses *l*, alum cell 2, shutter *s*, cylindrical lens *p* which converges the light laterally to a long narrow streak where it passes through the opening *m* to strip P. The set-screws *t' t'* adjust the forward position of the block t^2 on apparatus *El* to bring the shutter *s* to the right point. p^2 is a small selenium cell which serves to automatically start off the strip P when the phenomenon occurs which is to be recorded. The shutter *s* is caused to vibrate, as already stated, and

This immediately pulls up the armature and lever L and raises the pawl which had previously held the reel A′, whereupon the reel is suddenly revolved and draws the strip P past opening *m* until the sound or other phenomena ceases, when the shutter becomes still, the current substantially ceases to flow through the cell p^3 and magnet M′, the lever L drops and the reel A′ is stopped. When reproducing the recorded phenomena the lever L is lifted manually by a cord *a* running over a pulley through an aperture to the outside at some accessible point, where it can be pulled when desired. The current of the cell p^2 can also be sent through induction coil I and transmit the message if desired to a telephone T at the same time that it is being recorded on P.

The shutter may be attached directly to the center of the diaphragm, or at the end of a light lever, as in Figs. 38 and 44, pivoted in a bar or support *b*. The diaphragm being connected to the short arm of the lever a greatly increased motion of the shutter is obtained.

Fig. 40 is a more complete view of the arrangement heretofore shown in Figs. 14, 15, 21, 22, 23 and 34. The slide S, Fig. 38, having a single slit *m*, is removed and in its place is put slide S^2, having three slits, as in Fig. 42. The slide S is represented by slide S′ in Fig. 41, having a base 16, upon which slides another piece 17, carrying the plano-cylindrical lens *p* adjustable to bring its focus at or near the opening *m*. Slide S^2 has three slits adjustable upon it, as in Fig. 23, with three cylindrical lenses *p* attached to an arc 18 upon which they may be adjusted laterally to bring their foci in or near *m*, *m′*, m^2, and the whole series are adjustable on the slide 17, as before described. The light from each lens goes to its own selenium cell *p′*, which are adjustable in position in the manner already set forth on a base plate 16, Fig. 43, which is screwed in place in the apparatus, and each cell has its electrical connections suitably arranged, as fully hereinbefore specified so that further explanation of Fig. 40 is needless except that when the single cell *p′*, Fig. 38, is to be used the middle cell *p′*, Fig. 43, is simply swung out of the way by turning it down on its screw, which allows the light to pass properly.

Fig. 44 shows the connection of apparatus E*l* with its shutter *s*, diaphragm D, armature *g*, magnet G, and wires *c* to the body and base of the main apparatus *t t* being the ways by which E*l* slides back and forth as before stated.

repeating or transmitting it further on to another station or apparatus E*l* and another T. This is done by means of the selenium cell p^3 which is more or less exposed to light by the motion of the armature *g* of E*l*, as it is vibrated by the current flowing through the magnet G. This may be done either by the shutter attached to the armature and cutting off more or less of the light thrown across it to the cell or by a mirror which reflects more or less of its light upon p^3 according to its vibration. Both are shown in the model having their own selenium cells. The current of one of these can be sent through the magnet G to reinforce a line current coming in at the binding posts at L while the current of the other cell p^3 can be sent farther on as before stated or can be sent to the induction coil I, whose secondary current is transmitted on as delineated in the drawing. Fig. 47 shows the current of this selenium cell employed to operate a starting magnet M′ in place of the cell p^2 in Fig. 38. When the lever L is lifted it hits a contact point above and completes the circuit L^3 through the lever. This current runs to a small electric motor EM, Figs. 38 and 48, which by a belt B working on pulley R′ revolves the reel A′ and feeds the strip or pattern P. A crank handle is provided for manually turning the pulley R′, winding a cord and lifting a weight (or winding a spring) for running the reel when an electro-motor can not conveniently be used. When using the latter the arbor for the cord is disconnected by unscrewing the set-screw which holds it on the shaft.

Fig. 48 shows the arrangement for running reel A′. 9 is a steel shaft running in bearings as U U. When the pulley R′ is turned to lift the weight, the pawl *z* catches in the ratchet wheel *w′* and holds the winding as usual. The pawl *z* is fastened to another ratchet wheel *w*, whose teeth face in the opposite direction to those of *w′*, and which are held by a pawl *z′* fastened to any stationary support shown in the drawing, as the back of the box or apparatus.

The disk *v* seen in Figs. 35, 38 and 47 is connected to wheels *w* by springs shown as held between posts projecting from the adjacent faces of *v* and *w* respectively. Any convenient number of springs may be so applied as to give the desired strength. When the lever L with its pawl suddenly stops the motion of disk *v*, the weight continues to pull the wheel *w* around until the springs between it and *v* bring *w* to a standstill. *w* being prevented from reced-

it will record all the phenomena which the "telephone" is capable of being affected by. In turn, it can reproduce the actions of the telephone caused by those phenomena or the phenomena themselves, not only in their original strength, but amplified or strengthened without otherwise changing them.

For some purposes, it may be advisable, while making the negative, to substitute that with its slit *m* for the selenium devices of the telephone and record the variations of the light as they are produced, as shown at P in Fig. 37. For instance, the negative could be substituted in place of the cell r^2 in Fig. 21, and record the variations of the light *l'* produced by the vibrations of the armature *g* with its shutter. This arrangement is more fully shown in Fig. 37, where the strip P is seen arranged behind the slit *m* and exposed to the light from *l'*, which is varied by the shutter *s'*. This will ordinarily be the best way for strengthening light pulsations. As the vibrations of the shutter on the armature *g* are much more ample than those of the shutter on the diaphragm *d* under the action of the same sound, current or other influence. One way of doing this is illustrated in Fig. 37, where the light from *l* varied by the shutter on *d* is thrown on the selenium cell *p*, and the current thus produced is let through the thermal wires *c c* of the telephone, causing a considerable increase in the vibration of the armature *g* with its shutter *s'*. This produces more marked variations in the light from *l'* which, thus strengthened or amplified, are then recorded on the negative strip P.

There are very many other uses for which my apparatus may be employed, but it is unnecessary to enumerate them, as the directions herein given will enable those versed in photography, electricity, and acoustics, to practise any of them.

It will, of course, be understood that I do not confine myself to the precise details of the construction or arrangement of my apparatus as herein set forth, for there are many ways in which they may be modified without changing or departing from the principles of my invention. I am aware that it is not new to produce photographic impressions of telegraphic messages arriving over a line, such impressions not being capable of reproducing said messages again. Such a process is merely one way of printing the telegraphic messages received, but such prints are of no value for the purposes of my process because they are not capable of use in the process as "patterns." My invention or process has not for one of its objects to merely print the telegraphic messages received, but the production by means vices which are adapted to reproduce such impulses whenever desired. I, therefore, do not claim a process for printing telegraphic messages by photography, which has for its object and result the production of prints that have no function, use, or value, except as copies of the messages received and so printed as aforesaid.

Fig. 38 shows the general arrangement of the apparatus in more detail than Fig. 10. When in use the works are shut in by tight doors, as in Fig. 45, where O is the mouth piece through which vocal or other sounds are thrown on the diaphragm D. This mouth piece may be a deep bell-shaped cavity directly over the diaphragm or be fitted to the face and be connected by a tube ending over the diaphragm. The effect is much increased by having the mouth piece fit closely to the face of the speaker. *El* represents an electrical apparatus capable of vibrating the diaphragm D when a telephonic, telegraphic or other suitable current is passed through it and thereby vibrating the shutter *s* placed in the path of the beam of radiant rays from *l* here shown as an electric lamp, and thus varying said beam in accordance with the extent and character of its own movements. The beam thus varied is in the first instance thrown upon the sensitized strip P fed down from reel A over guide roller R before the opening or slit *m* on to another reel A'. The strip having been properly treated to bring out and fix the image thus obtained and render it suitable for use as a pattern, as before described, it is again wound upon reel A and its end hooked to reel A'. The apparatus *El* is moved back far enough to take shutter *s* out of the beam of radiant rays which then pass through the negative and are varied thereby as they had been previously varied by the shutter *s*, after which they fall upon a selenium cell or other suitable apparatus *p'*, all as heretofore explained.

Fig. 39 is a horizontal section through the lines *x*—*x* of Fig. 38, showing the light and lenses *l*, alum cell 2, shutter *s*, cylindrical lens *p* which converges the light laterally to a long narrow streak where it passes through the opening *m* to strip P. The set-screws *t' t'* adjust the forward position of the block t^2 on apparatus *El* to bring the shutter *s* to the right point. p^2 is a small selenium cell which serves to automatically start off the strip P when the phenomenon occurs which is to be recorded. The shutter *s* is caused to vibrate, as already stated, and thereby uncovers the cell p^2, allowing the light which had previously been stopped by the shutter to fall upon the cell and by increasing its conductivity an electric impulse is sent through the starting magnet M'.

This immediately pulls up the armature and lever L and raises the pawl which had previously held the reel A′, whereupon the reel is suddenly revolved and draws the strip P past opening *m* until the sound or other phenomena ceases, when the shutter becomes still, the current substantially ceases to flow through the cell p^2 and magnet M′, the lever L drops and the reel A′ is stopped. When reproducing the recorded phenomena the lever L is lifted manually by a cord *a* running over a pulley through an aperture to the outside at some accessible point, where it can be pulled when desired. The current of the cell p^2 can also be sent through induction coil I and transmit the message if desired to a telephone T at the same time that it is being recorded on P.

The shutter may be attached directly to the center of the diaphragm, or at the end of a light lever, as in Figs. 38 and 44, pivoted in a bar or support *b*. The diaphragm being connected to the short arm of the lever a greatly increased motion of the shutter is obtained.

Fig. 40 is a more complete view of the arrangement heretofore shown in Figs. 14, 15, 21, 22, 23 and 34. The slide S, Fig. 38, having a single slit *m*, is removed and in its place is put slide S^2, having three slits, as in Fig. 42. The slide S is represented by slide S′ in Fig. 41, having a base 16, upon which slides another piece 17, carrying the plano-cylindrical lens *p* adjustable to bring its focus at or near the opening *m*. Slide S^2 has three slits adjustable upon it, as in Fig. 23, with three cylindrical lenses *p* attached to an arc 18 upon which they may be adjusted laterally to bring their foci in or near *m*, *m′*, m^2, and the whole series are adjustable on the slide 17, as before described. The light from each lens goes to its own selenium cell *p′*, which are adjustable in position in the manner already set forth on a base plate 16, Fig. 43, which is screwed in place in the apparatus, and each cell has its electrical connections suitably arranged, as fully hereinbefore specified so that further explanation of Fig. 40 is needless except that when the single cell *p′*, Fig. 38, is to be used the middle cell *p′*, Fig. 43, is simply swung out of the way by turning it down on its screw, which allows the light to pass properly.

Fig. 44 shows the connection of apparatus E*l* with its shutter *s*, diaphragm D, armature *g*, magnet G, and wires *c* to the body and base of the main apparatus *t t* being the ways by which E*l* slides back and forth as before stated.

Fig. 46 shows the mode of connecting up for recording the incoming message (or the like) at P and at the same time listening to it or receiving it at T by any telephone, telegraphic, or other suitable apparatus and also repeating or transmitting it further on to another station or apparatus E*l* and another T. This is done by means of the selenium cell p^3 which is more or less exposed to light by the motion of the armature *g* of E*l*, as it is vibrated by the current flowing through the magnet G. This may be done either by the shutter attached to the armature and cutting off more or less of the light thrown across it to the cell or by a mirror which reflects more or less of its light upon p^3 according to its vibration. Both are shown in the model having their own selenium cells. The current of one of these can be sent through the magnet G to reinforce a line current coming in at the binding posts at L while the current of the other cell p^3 can be sent farther on as before stated or can be sent to the induction coil I, whose secondary current is transmitted on as delineated in the drawing. Fig. 47 shows the current of this selenium cell employed to operate a starting magnet M′ in place of the cell p^2 in Fig. 38. When the lever L is lifted it hits a contact point above and completes the circuit L^3 through the lever. This current runs to a small electric motor EM, Figs. 38 and 48, which by a belt B working on pulley R′ revolves the reel A′ and feeds the strip or pattern P. A crank handle is provided for manually turning the pulley R′, winding a cord and lifting a weight (or winding a spring) for running the reel when an electro-motor can not conveniently be used. When using the latter the arbor for the cord is disconnected by unscrewing the set-screw which holds it on the shaft.

Fig. 48 shows the arrangement for running reel A′. 9 is a steel shaft running in bearings as U U. When the pulley R′ is turned to lift the weight, the pawl *z* catches in the ratchet wheel *w′* and holds the winding as usual. The pawl *z* is fastened to another ratchet wheel *w*, whose teeth face in the opposite direction to those of *w′*, and which are held by a pawl *z′* fastened to any stationary support shown in the drawing, as the back of the box or apparatus.

The disk *v* seen in Figs. 35, 38 and 47 is connected to wheels *w* by springs shown as held between posts projecting from the adjacent faces of *v* and *w* respectively. Any convenient number of springs may be so applied as to give the desired strength. When the lever L with its pawl suddenly stops the motion of disk *v*, the weight continues to pull the wheel *w* around until the springs between it and *v* bring *w* to a standstill. *w* being prevented from receding any by the pawl *z′*, the springs remain under tension (or compression, as the case may be) until the lever L is lifted again out of the notch of *v*, which is thereupon suddenly forced forward by the recoil of the springs. This secures that the reel A′ and

strip P shall have a rapid motion given to them at the outset instead of beginning slowly and gradually acquiring the proper speed as would occur without this device.

The reel A′ fits upon a square formed on the sleeve 10 and, therefore, moves with it. The strip P wound around the reel is protected from the light by the light-tight case or box 11, having a cover 12 held on by springs 13. This box turns loosely on the reel and takes any position agreeable to the strip P while feeding off it through an opening through its side, as seen in Fig. 50. 14 is a catch to hold the reel upon the sleeve 10, but allowing it to be readily removed when desired.

Substantially the same description applies to the reel A in Figs. 49 and 51. 14 is a snap spring to hold it on sleeve 10, which is held on shaft 9 in any convenient way shown as by a pin through 9. The spring 1 bearing on a collar of 10 acts as a friction brake on reel A. Shaft 9 is fixed in any convenient way, shown as bolted to the box or case of the apparatus.

It will be observed that by this invention a recording medium is transmitted to the surface adapted to receive the record and that this medium is merely controlled by the speaking diaphragm as it passes to the surface and thus the diaphragm is not called upon to do the physical work of making the record. The light projected on the surface makes the record and is simply controlled in character or position as it passes.

Having thus fully described my invention what I now claim as new and desire to secure by Letters Patent is:

1. In the within described system, the device or combination of elements for recording and reproducing pulsations or variations in radiant energy, consisting in the combination of a suitable surface having those variations consecutively recorded upon it and adapted for producing similar variations in a beam of light; an electric receiver sensitive to light having such varying beam of light thrown upon it and thereby producing similar variations in an electric current having any desired strength; and an electrical receiver actuated by said current and producing similar variations in radiant energy.

2. In the within system, a device or combination for amplifying or enlarging the effective action of sound wave in the direction of its width of intensity without changing its proportional length, consisting in the combination of a source of light; means operated by and in accordance with sound waves for varying the light; and a uniformly moving sensitive surface; the speed [illegible] and the relative distances

3. In the within system, a device or combination for reinforcing the sounds produced in the original or central sound-producing instrument, at such stages or distances as the sounds can be heard plainly, consisting in the combination of the central sound-producing instrument; suitable secondary sound-producing apparatus at each such stage; electrical connections from each apparatus to the original instrument; apparatus producing currents similarly varied and sent to each secondary apparatus; and means for so adjusting the transmission of the several currents that the like variations occur at such intervals one after the other, as correspond to the time required for the sounds to pass from each station to the next one in order.

4. In the within system including a reproducing instrument, a device or combination for automatically regulating and controlling an electrical current flowing through the reproducing instrument, consisting in a suitable electric generator, a conductor whose resistance can be varied by means of the record or pattern included in the circuit of the instrument; a source of radiant energy capable of affecting the resistance of said conductor; a pattern having upon it curves or forms representing the pulsations or variations it is desired to make in the current arranged to properly control said radiant energy; and means for moving the pattern at such speed as will produce the desired variations in the resistance of said variable conductor and, consequently, in the current flowing through it and through the circuit.

5. In the within system, a device or combination for automatically varying the intensity and direction of a current flowing through a circuit, consisting in said circuit having two branches; an electrical conductor in each branch whose resistance is varied by light; electrical connections between them and said circuit such that the current that flows through one will be in the opposite direction to that which flows through the other, and each will have a strength proportionate to the resistance in its circuit at each instant; means for supplying a suitable beam of light for said conductors; means for properly varying said beam of light while falling on said conductors, and thereby so varying their resistances as to allow the current to predominate and have the strength in either of them, as may be desired.

6. In the within system, a device or combination including a pattern for producing in an electrical current pulsations or variations corresponding to those formed on the record or pattern, consisting in a source of

electrical resistance is varied by the action of said rays; said record or pattern interposed in the path of said beam and arranged to be moved uniformly before said beam and to vary the amount of said rays which shall reach said conductor in accordance with the forms or curves exposed to said beam; a suitable perforated screen limiting said beam to a cross-section whose length is equal to the maximum width of said pattern or record, and whose lateral width is very small, so as to expose but a minute portion of the length of said record or pattern to said rays at any particular instant; a suitable electrical circuit containing said variable conductor so that variations in its resistance produce similar variations in the current flowing through said circuit; means for moving said record or pattern at the proper speed whereby it varies the length of said beam which shall reach said variable conductor in proportion to the width of said record or pattern which is exposed to said beam at each successive instant and thereby correspondingly varies the resistance of said conductor and the strength of the current flowing through it.

7. In the within system, a combination or device which, in the process of forming a record of pulsations in or variations in light, sound, electric currents, and magnetism, amplifies the record in width without changing the length or duration of the waves, consisting of a source of light and a shutter constituting means for recording said variations; and means for varying the position of the light with respect to the shutter for producing a leverage or multiplication of the movement which corresponds to the intensity of said variations; whereby a correspondingly increased width or surface of the sensitive material is acted upon in making the record and a suitable sensitive surface adapted for forming said record.

8. In the within system, the combination of a device for reproducing the variations or pulsations in sound, light, electric currents, or magnetism, recorded on the pattern; said pattern, suitable reproducing apparatus; apparatus producing a suitable active agent for governing the action of the reproducing apparatus according to the intensity thereof acting upon it; said pattern arranged to vary the intensity of said active agent according to the form of the portion exposed to it; means for uniformly moving said record or pattern along at the proper speed and successively exposing the different portions to said active agent; whereby the intensity of said active agent is varied in pro-

device for recording variations or pulsations in radiant energy consisting of a screen provided with a narrow slit or opening through which a beam may pass, apparatus furnishing said suitable beam of light, a sensitive surface arranged to receive said beam, means for moving said surface along before said slit; a light-varying device interposed in the path of said beam, actuated by the radiant energy which is to be recorded, in accordance with the pulsations or variations therein, and arranged to vibrate in the proper direction as described relatively to the motion of the sensitive surface; whereby an image or record is produced on said surface having variations corresponding to the variations of intensity and duration in the phenomenon being recorded and capable of reproducing said phenomenon.

10. In the within system, a combination or device for reproducing sound, in a different tone, note, or pitch, consisting of a photographically-obtained negative or record of said sound; suitable sound-producing apparatus controlled by said record; and means for moving said record more rapidly or less rapidly than while the record was being produced according as the pitch is to be higher or lower than that of the original sound.

11. The combination of a source of light, a uniformly moving surface sensitive to light; and a shutter moved by or in accordance with sound waves or pulsations and arranged and operating to admit said light to or cut it off from said surface in accordance with said sound pulsations or variations and thereby produce a record capable of reproducing said sound waves or pulsations, substantially as described.

12. The combination of a source of light adapted to cast a beam; a diaphragm adapted to be vibrated by or in accordance with variations or pulsations in radiant energy, a shutter moved by the diaphragm in its vibrations and arranged to interrupt or modify the said beam of light in accordance therewith; a surface sensitive to light and means for moving said surface along under exposure to said varying light beam to form a record capable of reproducing said pulsations or variations.

13. The combination of photographically produced negative or pattern having upon it forms or curves representing variations or pulsations in sound, light, or electric currents and arranged to vary the resistance of an electrical conductor in accordance with the curves or forms upon it; an electrical conductor adapted for being [illegible]

speed as would occur without this device.

The reel A′ fits upon a square formed on the sleeve 10 and, therefore, moves with it. The strip P wound around the reel is protected from the light by the light-tight case or box 11, having a cover 12 held on by springs 13. This box turns loosely on the reel and takes any position agreeable to the strip P while feeding off it through an opening through its side, as seen in Fig. 50. 14 is a catch to hold the reel upon the sleeve 10, but allowing it to be readily removed when desired.

Substantially the same description applies to the reel A in Figs. 49 and 51. 14 is a snap spring to hold it on sleeve 10, which is held on shaft 9 in any convenient way shown as by a pin through 9. The spring 1 bearing on a collar of 10 acts as a friction brake on reel A. Shaft 9 is fixed in any convenient way, shown as bolted to the box or case of the apparatus.

It will be observed that by this invention a recording medium is transmitted to the surface adapted to receive the record and that this medium is merely controlled by the speaking diaphragm as it passes to the surface and thus the diaphragm is not called upon to do the physical work of making the record. The light projected on the surface makes the record and is simply controlled in character or position as it passes.

Having thus fully described my invention what I now claim as new and desire to secure by Letters Patent is:

1. In the within described system, the device or combination of elements for recording and reproducing pulsations or variations in radiant energy, consisting in the combination of a suitable surface having those variations consecutively recorded upon it and adapted for producing similar variations in a beam of light; an electric receiver sensitive to light having such varying beam of light thrown upon it and thereby producing similar variations in an electric current having any desired strength; and an electrical receiver actuated by said current and producing similar variations in radiant energy.

2. In the within system, a device or combination for amplifying or enlarging the effective action of sound wave in the direction of its width of intensity without changing its proportional length, consisting in the combination of a source of light; means operated by and in accordance with sound waves for varying the light; and a uniformly moving sensitive surface; the speed of said surface and the relative distances between said three elements being variable to suit the requirements of the case.

ducing instrument, at such stages or distances as the sounds can be heard plainly, consisting in the combination of the central sound-producing instrument; suitable secondary sound-producing apparatus at each such stage; electrical connections from each apparatus to the original instrument; apparatus producing currents similarly varied and sent to each secondary apparatus; and means for so adjusting the transmission of the several currents that the like variations occur at such intervals one after the other, as correspond to the time required for the sounds to pass from each station to the next one in order.

4. In the within system including a reproducing instrument, a device or combination for automatically regulating and controlling an electrical current flowing through the reproducing instrument, consisting in a suitable electric generator, a conductor whose resistance can be varied by means of the record or pattern included in the circuit of the instrument; a source of radiant energy capable of affecting the resistance of said conductor; a pattern having upon it curves or forms representing the pulsations or variations it is desired to make in the current arranged to properly control said radiant energy; and means for moving the pattern at such speed as will produce the desired variations in the resistance of said variable conductor and, consequently, in the current flowing through it and through the circuit.

5. In the within system, a device or combination for automatically varying the intensity and direction of a current flowing through a circuit, consisting in said circuit having two branches; an electrical conductor in each branch whose resistance is varied by light; electrical connections between them and said circuit such that the current that flows through one will be in the opposite direction to that which flows through the other, and each will have a strength proportionate to the resistance in its circuit at each instant; means for supplying a suitable beam of light for said conductors; means for properly varying said beam of light while falling on said conductors, and thereby so varying their resistances as to allow the current to predominate and have the strength in either of them, as may be desired.

6. In the within system, a device or combination including a pattern for producing in an electrical current pulsations or variations corresponding to those formed on the record or pattern, consisting in a source of radiant energy arranged to throw a steady beam of its rays upon a conductor whose

electrical resistance is varied by the action of said rays; said record or pattern interposed in the path of said beam and arranged to be moved uniformly before said beam and to vary the amount of said rays which shall reach said conductor in accordance with the forms or curves exposed to said beam; a suitable perforated screen limiting said beam to a cross-section whose length is equal to the maximum width of said pattern or record, and whose lateral width is very small, so as to expose but a minute portion of the length of said record or pattern to said rays at any particular instant; a suitable electrical circuit containing said variable conductor so that variations in its resistance produce similar variations in the current flowing through said circuit; means for moving said record or pattern at the proper speed whereby it varies the length of said beam which shall reach said variable conductor in proportion to the width of said record or pattern which is exposed to said beam at each successive instant and thereby correspondingly varies the resistance of said conductor and the strength of the current flowing through it.

7. In the within system, a combination or device which, in the process of forming a record of pulsations in or variations in light, sound, electric currents, and magnetism, amplifies the record in width without changing the length or duration of the waves, consisting of a source of light and a shutter constituting means for recording said variations; and means for varying the position of the light with respect to the shutter for producing a leverage or multiplication of the movement which corresponds to the intensity of said variations; whereby a correspondingly increased width or surface of the sensitive material is acted upon in making the record and a suitable sensitive surface adapted for forming said record.

8. In the within system, the combination of a device for reproducing the variations or pulsations in sound, light, electric currents, or magnetism, recorded on the pattern; said pattern, suitable reproducing apparatus; apparatus producing a suitable active agent for governing the action of the reproducing apparatus according to the intensity thereof acting upon it; said pattern arranged to vary the intensity of said active agent according to the form of the portion exposed to it; means for uniformly moving said record or pattern along at the proper speed and successively exposing the different portions to said active agent; whereby the intensity of said active agent is varied in proportion to the width of the wave at each instant of time exposed to it; thereby properly varying the action of the reproducing apparatus.

9. In the within system, a combination or device for recording variations or pulsations in radiant energy consisting of a screen provided with a narrow slit or opening through which a beam may pass, apparatus furnishing said suitable beam of light, a sensitive surface arranged to receive said beam, means for moving said surface along before said slit; a light-varying device interposed in the path of said beam, actuated by the radiant energy which is to be recorded, in accordance with the pulsations or variations therein, and arranged to vibrate in the proper direction as described relatively to the motion of the sensitive surface; whereby an image or record is produced on said surface having variations corresponding to the variations of intensity and duration in the phenomenon being recorded and capable of reproducing said phenomenon.

10. In the within system, a combination or device for reproducing sound, in a different tone, note, or pitch, consisting of a photographically-obtained negative or record of said sound; suitable sound-producing apparatus controlled by said record; and means for moving said record more rapidly or less rapidly than while the record was being produced according as the pitch is to be higher or lower than that of the original sound.

11. The combination of a source of light, a uniformly moving surface sensitive to light; and a shutter moved by or in accordance with sound waves or pulsations and arranged and operating to admit said light to or cut it off from said surface in accordance with said sound pulsations or variations and thereby produce a record capable of reproducing said sound waves or pulsations, substantially as described.

12. The combination of a source of light adapted to cast a beam; a diaphragm adapted to be vibrated by or in accordance with variations or pulsations in radiant energy, a shutter moved by the diaphragm in its vibrations and arranged to interrupt or modify the said beam of light in accordance therewith; a surface sensitive to light and means for moving said surface along under exposure to said varying light beam to form a record capable of reproducing said pulsations or variations.

13. The combination of photographically produced negative or pattern having upon it forms or curves representing variations or pulsations in sound, light, or electric currents and arranged to vary the resistance of an electrical conductor in accordance with the curves or forms upon it; an electrical conductor adapted for being so acted upon and controlled by the pattern; and suitable driving mechanism for properly moving the pattern along.

14. The combination of a source of light furnishing an elongated beam; means for

varying the amount transmitted by said beam in accordance with the pulsations or variations in the sound, light, electric current, or magnetic attraction which are to be recorded; a surface sensitive to light; and mechanism for moving said surface along in the path of said beam to form a record capable of reproducing said pulsations or variations.

15. The combination of a source of light furnishing an elongated beam; a pattern having variations in light recorded thereon such as herein described arranged to vary said beam in accordance with the variations in said pattern; mechanism for moving said pattern in the path of said beam; and an electrical conductor whose resistance is varied by light, arranged to receive said varying beam of light and to correspondingly vary an electric current flowing through it.

16. The combination of a source of light adapted to furnish an elongated beam; a pattern having forms thereon corresponding to variations in light movable across the path of said beam and arranged to vary said beam in accordance with the variations in the forms upon it; means for moving said pattern and an electrical conductor sensitive to light exposed to said varying beam.

17. The combination of a source of light furnishing a steady beam of light; a moving pattern accurately representing sound waves arranged to vary said beam in accordance with the forms upon it; and translating devices actuated by and in accordance with said varying beam of light.

18. In apparatus for recording and reproducing sound through the medium of light, a movable record blank sensitive to light, means for projecting light varied in accordance with the pulsations or variations in sound upon said blank to form a record, means for rendering said record translucent in degrees corresponding to said pulsations or variations, means for reproducing sound and means for projecting light through the record thus produced to reproduce the sound.

19. The combination of a source of radiant energy; means for properly directing the rays therefrom; a moving pattern in the path of said rays having upon it curves or forms representing variations or pulsations in sounds, light, or electrical currents and constructed and arranged to properly vary the said rays; a stationary screen or device having one or more apertures or slits in it for stopping all of the said rays except those which pass through said slit or slits; an electrical conductor whose resistance is varied by said radiant energy, arranged to be acted upon by the rays passing through or controlled by the currents flowing through said conductor; substantially as set forth.

20. The combination of a source of light; a moving pattern or form representing variations or pulsations in sound, electric currents, or magnetic attraction; a slitted screen or partition for directing said light upon said pattern; a body sensitive to light exposed to said varying beam and a suitable camera or casing inclosing the whole.

21. The combination of a source of radiant energy, means for directing rays therefrom: a photographically-produced pattern for properly interrupting or acting upon said rays in accordance with the photographed curves upon it; and a suitable device or body sensitive to the action of said radiant force constructed in elongated form and adapted to be acted upon more or less energetically in proportion to the length of it which is exposed thereto by the interrupting device, substantially as set forth.

22. The combination of a source of radiant energy, a body sensitive to the action of said radiant energy, constructed in an elongated form and adapted to be acted upon more or less energetically according to the length of it which is exposed to said radiant force; a movable device consisting of a record due to the action of sound waves arranged between them and adapted to vary the action of the radiant force upon the sensitive body by varying the length of said body which is exposed thereto; and means for properly moving said movable device in accordance with the variations or pulsations of sound, substantially as set forth.

23. The combination of a source of radiant energy; means for directing the rays therefrom; a moving pattern in the path of said rays and adapted for properly manipulating the same, the said pattern consisting of a record in properly timed sequence of changing phenomena; a stationary screen or partition having two or more apertures or slits through it for allowing the passage of rays manipulated by different portions of the pattern at the same time; and suitable stationary devices sensitive to said radiant energy arranged opposite the openings or slits and adapted to be successively acted upon by rays manipulated by a given portion of the pattern and coming through the different slits one after the other as the said portion of the pattern moves past the successive slits.

24. The combination of a source of light; a pattern moved uniformly in the path of said light, the said pattern consisting of a record in properly timed sequence of changing phenomena; a stationary screen provided with a series of slits or openings for

means for adjusting the intervals of time between them by varying the distances between the respective slits.

25. The combination of a source of radiant energy and an electric circuit; a conductor in such circuit capable of being affected by said radiant energy to vary its resistance; and a photographically produced negative or pattern having upon it a record adapted to vary the radiant energy reaching said conductor for producing corresponding changes in the resistance of said conductor; for automatically regulating, controlling and varying the current flowing through the conductor according to the forms on the pattern.

26. The combination of a source of radiant energy and an electric circuit; an electrical conducting device in said circuit adapted to send through the circuit a current which varies in intensity and polarity in accordance with the variations in the curves or forms upon the pattern which controls its action; a photographically produced negative or pattern having upon it forms or curves representing sound waves or electrical impulses automatically recorded by the sounds or impulses themselves and adapted for reproducing the same again, the said pattern being moved between said source of radiant energy and conducting device to control the energy reaching the conducting device to cause it to send through the circuit an undulating or alternating current corresponding to the curves or forms upon the pattern and, consequently, corresponding to the variations or pulsations in the phenomena recorded upon the pattern, substantially as set forth.

27. In an apparatus for recording and reproducing sounds, electrical impulses and analogous phenomena, a stationary opaque partition or screen, having two or more openings or slits, and arranged to stop all of the radiant rays except those which pass through said slits, provided with means for varying the relative distances of the said openings or slits from each other, and apparatus for properly directing a beam of light through each of said openings at the same time, a record or pattern in properly timed sequence of said phenomena moving before said openings, and a separate means before each of said openings or slits for utilizing said phenomena, all combined and operating substantially as set forth.

28. In the within system, a combination or device for recording sounds, electrical impulses and analogous phenomena, consisting the width of said image shall correspond to the varying intensity of the pulsations or variations in said phenomena and the form of the curved outlines thereof shall correspond to the character and direction of said variations or pulsations at each instant of time; the sensitive surface when acted upon by said image being afterward treated to impart to it actinic or other properties different from the remainder of the surface, whereby it is adapted for reproducing the phenomena so recorded thereby.

29. In the within system, a device or combination for recording sounds, electrical impulses and analogous phenomena, consisting of suitable devices and means controlled by the phenomenon which is to be recorded and producing upon a sensitive surface a characteristic change, which renders the part so acted upon different from the rest of said surface and which corresponds in intensity, extent, or character with the intensity and character of the phenomenon or influence which produced the same; said sensitive surface; means for confining or limiting the said action of said phenomena to a definite area or section of said sensitive surface, which area may be of any suitable length, but of comparatively very limited breadth; means for moving said surface uniformly along in the direction of the breadth of said section of its surface and thereby bringing different portions of said sensitive surface successively under the influence of said phenomenon in the form of a strip having a width equal to the length of said section and of any convenient length; said surface being afterward treated, thereby producing upon the negative or pattern an image or form corresponding to the variations or pulsations of the phenomenon which produced it, and characterized by photographic properties, which adapt it for reproducing the same or similar pulsations or variations in light, sound, electrical currents and analogous phenomena, substantially as herein set forth.

30. In apparatus for recording and reproducing sound through the medium of light, a movable record blank sensitive to light, means for projecting light varied in accordance with pulsations or variations in sound upon said blank to form a record and means for utilizing the record thus produced to reproduce the sound.

31. In the within system a source of light arranged to cast a beam, a record blank sensitive to light, means for moving said blank along in the path of said beam, means con-

recorded; a surface sensitive to light; and mechanism for moving said surface along in the path of said beam to form a record capable of reproducing said pulsations or variations.

15. The combination of a source of light furnishing an elongated beam; a pattern having variations in light recorded thereon such as herein described arranged to vary said beam in accordance with the variations in said pattern; mechanism for moving said pattern in the path of said beam; and an electrical conductor whose resistance is varied by light, arranged to receive said varying beam of light and to correspondingly vary an electric current flowing through it.

16. The combination of a source of light adapted to furnish an elongated beam; a pattern having forms thereon corresponding to variations in light movable across the path of said beam and arranged to vary said beam in accordance with the variations in the forms upon it; means for moving said pattern and an electrical conductor sensitive to light exposed to said varying beam.

17. The combination of a source of light furnishing a steady beam of light; a moving pattern accurately representing sound waves arranged to vary said beam in accordance with the forms upon it; and translating devices actuated by and in accordance with said varying beam of light.

18. In apparatus for recording and reproducing sound through the medium of light, a movable record blank sensitive to light, means for projecting light varied in accordance with the pulsations or variations in sound upon said blank to form a record, means for rendering said record translucent in degrees corresponding to said pulsations or variations, means for reproducing sound and means for projecting light through the record thus produced to reproduce the sound.

19. The combination of a source of radiant energy; means for properly directing the rays therefrom; a moving pattern in the path of said rays having upon it curves or forms representing variations or pulsations in sounds, light, or electrical currents and constructed and arranged to properly vary the said rays; a stationary screen or device having one or more apertures or slits in it for stopping all of the said rays except those which pass through said slit or slits; an electrical conductor whose resistance is varied by said radiant energy, arranged to be acted upon by the rays passing through said slit or slits after being varied by the pattern; and an electrical receiver actuated

[illegible] of a source of light; a moving pattern or form representing variations or pulsations in sound, electric currents, or magnetic attraction; a slitted screen or partition for directing said light upon said pattern; a body sensitive to light exposed to said varying beam and a suitable camera or casing inclosing the whole.

21. The combination of a source of radiant energy, means for directing rays therefrom; a photographically-produced pattern for properly interrupting or acting upon said rays in accordance with the photographed curves upon it; and a suitable device or body sensitive to the action of said radiant force constructed in elongated form and adapted to be acted upon more or less energetically in proportion to the length of it which is exposed thereto by the interrupting device, substantially as set forth.

22. The combination of a source of radiant energy, a body sensitive to the action of said radiant energy, constructed in an elongated form and adapted to be acted upon more or less energetically according to the length of it which is exposed to said radiant force; a movable device consi[illegible]ng of a record due to the action of sound waves arranged between them and adapted to vary the action of the radiant force upon the sensitive body by varying the length of said body which is exposed thereto; and means for properly moving said movable device in accordance with the variations or pulsations of sound, substantially as set forth.

23. The combination of a source of radiant energy; means for directing the rays therefrom; a moving pattern in the path of said rays and adapted for properly manipulating the same, the said pattern consisting of a record in properly timed sequence of changing phenomena; a stationary screen or partition having two or more apertures or slits through it for allowing the passage of rays manipulated by different portions of the pattern at the same time; and suitable stationary devices sensitive to said radiant energy arranged opposite the openings or slits and adapted to be successively acted upon by rays manipulated by a given portion of the pattern and coming through the different slits one after the other as the said portion of the pattern moves past the successive slits.

24. The combination of a source of light; a pattern moved uniformly in the path of said light, the said pattern consisting of a record in properly timed sequence of changing phenomena; a stationary screen provided with a series of slits or openings for taking light from a given portion of the illuminated pattern at different times, and

means for adjusting the intervals of time between them by varying the distances between the respective slits.

25. The combination of a source of radiant energy and an electric circuit; a conductor in such circuit capable of being affected by said radiant energy to vary its resistance; and a photographically produced negative or pattern having upon it a record adapted to vary the radiant energy reaching said conductor for producing corresponding changes in the resistance of said conductor; for automatically regulating, controlling and varying the current flowing through the conductor according to the forms on the pattern.

26. The combination of a source of radiant energy and an electric circuit; an electrical conducting device in said circuit adapted to send through the circuit a current which varies in intensity and polarity in accordance with the variations in the curves or forms upon the pattern which controls its action; a photographically produced negative or pattern having upon it forms or curves representing sound waves or electrical impulses automatically recorded by the sounds or impulses themselves and adapted for reproducing the same again, the said pattern being moved between said source of radiant energy and conducting device to control the energy reaching the conducting device to cause it to send through the circuit an undulating or alternating current corresponding to the curves or forms upon the pattern and, consequently, corresponding to the variations or pulsations in the phenomena recorded upon the pattern, substantially as set forth.

27. In an apparatus for recording and reproducing sounds, electrical impulses and analogous phenomena, a stationary opaque partition or screen, having two or more openings or slits, and arranged to stop all of the radiant rays except those which pass through said slits, provided with means for varying the relative distances of the said openings or slits from each other, and apparatus for properly directing a beam of light through each of said openings at the same time, a record or pattern in properly timed sequence of said phenomena moving before said openings, and a separate means before each of said openings or slits for utilizing said phenomena, all combined and operating substantially as set forth.

28. In the within system, a combination or device for recording sounds, electrical impulses and analogous phenomena, consisting of suitable recording apparatus actuated by the phenomena themselves, and arranged to automatically record them upon a sensitive surface; said sensitive surface; an elongated photographically obtained image or form so thrown upon said surface in which the width of said image shall correspond to the varying intensity of the pulsations or variations in said phenomena and the form of the curved outlines thereof shall correspond to the character and direction of said variations or pulsations at each instant of time; the sensitive surface when acted upon by said image being afterward treated to impart to it actinic or other properties different from the remainder of the surface, whereby it is adapted for reproducing the phenomena so recorded thereby.

29. In the within system, a device or combination for recording sounds, electrical impulses and analogous phenomena, consisting of suitable devices and means controlled by the phenomenon which is to be recorded and producing upon a sensitive surface a characteristic change, which renders the part so acted upon different from the rest of said surface and which corresponds in intensity, extent, or character with the intensity and character of the phenomenon or influence which produced the same; said sensitive surface; means for confining or limiting the said action of said phenomena to a definite area or section of said sensitive surface, which area may be of any suitable length, but of comparatively very limited breadth; means for moving said surface uniformly along in the direction of the breadth of said section of its surface and thereby bringing different portions of said sensitive surface successively under the influence of said phenomenon in the form of a strip having a width equal to the length of said section and of any convenient length; said surface being afterward treated, thereby producing upon the negative or pattern an image or form corresponding to the variations or pulsations of the phenomenon which produced it, and characterized by photographic properties, which adapt it for reproducing the same or similar pulsations or variations in light, sound, electrical currents and analogous phenomena, substantially as herein set forth.

30. In apparatus for recording and reproducing sound through the medium of light, a movable record blank sensitive to light, means for projecting light varied in accordance with pulsations or variations in sound upon said blank to form a record and means for utilizing the record thus produced to reproduce the sound.

31. In the within system a source of light arranged to cast a beam, a record blank sensitive to light, means for moving said blank along in the path of said beam, means controlled by sound waves or pulsations to vary the amount of said beam admitted to said blank to form a record capable of reproducing the sound, and means for relatively arranging said elements to intensify the recording effect.

32. In an apparatus for reproducing sound, a record having photographically produced thereon forms representing the pulsations or variations it is desired to reproduce, a circuit including a reproducer and a conductor whose resistance may be varied by light, means for moving said record along in proximity to said conductor, and means for projecting light through said record upon said conductor.

33. A record of pulsations in sound consisting of a thin sheet rendered translucent in degrees corresponding to said pulsations photographically-produced thereon and capable of reproducing the sound.

34. A record of pulsations in sound consisting of a strip or band photographically affected in accordance with said pulsations and capable of reproducing the sound.

35. In apparatus for recording and reproducing pulsations or variations in sound, a source of radiant energy, a movable record blank in proximity thereto sensitive to and capable of being affected by said energy for receiving and retaining a record of said energy, means for moving said record blank along, means for varying the amount of said energy admitted to said blank and thereby producing a characteristic change in said blank in accordance with said pulsations or variations to form a record and means for utilizing said record to reproduce the sound.

36. In apparatus for recording and reproducing pulsations or variations in sound, a movable strip or band sensitive to radiant energy, means for forming thereon a record of said pulsations or variations by the direct action of said radiant energy, reproducing means capable of being affected in accordance with said record and reproducing the sound, and means for moving said strip or band along in operative relation to said reproducing means.

37. The combination with a source of radiant energy, of a movable record blank operatively related thereto capable of being affected by said radiant energy, means for moving said record blank and means for varying the amount of said energy supplied to said record blank in accordance with pulsations or variations in sound to produce a characteristic change in said record blank and thereby form a record capable of reproducing the sound.

38. In apparatus for reproducing sound, a record having photographically produced thereon a representation of the pulsations or variations it is desired to reproduce, a circuit including a source of current a telephone and a selenium cell, means for suitably moving said record and means for projecting light through said record upon said selenium cell, a photographically produced record of succeeding variations in radiant energy, a circuit including a source of current, a reproducer, and a selenium cell, means for suitably moving said record and means for projecting light through said record upon said selenium cell.

40. In instruments of the class described, in combination, a photo-electric cell included in a telephone-circuit, a moving photographic sound-record, and means for passing light through said record to the cell, substantially as set forth.

41. The method of recording and reproducing sounds consisting in forming a photographic record of the sounds by directing actinic rays emanating from a source thereof upon a photo-sensitive surface and varying the said rays reaching said surface by and in accordance with the sound waves, then developing the photo-sensitive surface, then interposing the sound record so produced in the path of a constant beam of light, setting up in an electric circuit electric variations by and in accordance with the variations of the transmitted light-beam, and producing by said electric variations air vibrations corresponding to the original sound.

42. The method of recording sounds consisting in forming a photographic record of the sounds by directing actinic rays emanating from a source thereof upon a photo-sensitive surface and varying the amount of said emanations by and in accordance with the sound waves.

43. The method of recording sounds consisting in setting up in a charged electric circuit variations corresponding to the sound waves, controlling actinic radiations by and in accordance with said electric variations, and directing said actinic radiations upon a photo-sensitive surface.

44. In a device of the class described the combination with a photo-sensitive surface and a source of actinic rays movable relative one to the other, and means for controlling the said rays reaching said surface by and in accordance with sound waves.

45. In a device of the class described the combination with a source of light rays, of a photo-sensitive surface, means for moving said surface across said light rays, and means for controlling the amount of said rays reaching said surface by and in accordance with sound waves.

46. In a device of the class described the combination with a source of light rays, of a photo-sensitive surface, means for moving said surface across said light rays, and means for controlling the width of the beam of rays transversely of the moving surface

blank photographically affected in accordance with sound pulsations and capable of reproducing the sound.

48. The method of producing phonographic records capable of reproducing sound consisting in first obtaining a photographic pattern or negative representing pulsations in sound and then producing commercial copies from said negative.

49. A pattern or negative having photographically recorded thereon pulsations in sound and capable of use as a master record in producing therefrom commercial copies capable of reproducing the original pulsations in sound.

50. The combination with an electric circuit, of means for telephonically transmitting sounds thereon, a movable receiving surface, means for recording there n the transmitted sounds, and means for automatically moving said surface to receive the record, the said movement being controlled by the telephonic transmitting means.

51. The combination with an electric circuit, of means for telephonically transmitting sounds thereon, a distant movable receiving surface, means for moving said surface, means for recording on the moving surface the transmitted sounds, and means accessible at the transmitting point for controlling the movement of the receiving surface.

52. The combination with an electric circuit, of means for telephonically transmitting sounds thereon, a distant movable receiving surface, means tending to move said surface, a stop normally preventing movement of said surface, means accessible at the transmitting point for controlling said stop to permit the movement of said surface, and means for recording on the moving surface the transmitted sounds.

53. In a system of the class described the combination with an electric circuit, of means for transmitting to a distant point in said circuit telephonic messages, a second electric circuit at said distant point, means for receiving the sound pulsations in said first circuit at said distant point and for making a record thereof, and means operated by said record for impressing said pulsations on said second circuit whereby the message will be relayed, and means for reproducing as sound the relayed message.

54. The combination with an electric circuit, of a selenium cell therein, a movable sending blank having a record of visible forms thereon, means for transmitting a pulsations in said circuit for reproducing on said receiving blank the record of visible forms on said sending blank.

55. The combination with an electric circuit, of a selenium cell therein, a record surface different portions of which affect light differently, means for directing a beam of light from one point on said surface to said selenium cell the said beam being modified by said record, means for moving said record surface to bring successive portions under the influence of said beam directed to said selenium cell whereby varying pulsations or undulations will be set up in said circuit, a receiving surface, means for moving said surface, and means controlled by the pulsations in said circuit for reproducing on said receiving surface the original record.

56. The combination with an electric circuit, of a selenium cell therein, a record of visible forms, means for transmitting a beam of light from one point on said record to said cell, means for exposing different portions of said record to said beam to produce varying pulsations or undulations in said circuit, a receiving surface, and means controlled by said pulsations for reproducing on said receiving surface said record of visible forms.

57. The combination with an electric circuit, of means therein which react to light, a sending surface having recorded thereon variations in light, means for transmitting a beam of light from one point on said record to said light reacting means, means for exposing different portions of said record to said beam to produce varying pulsations or undulations in said circuit, a receiving surface, and means controlled by said pulsations for reproducing on said receiving surface said record of variations in light.

58. The combination with an electric circuit, of means therein which react to light, a sending surface having recorded thereon variations in light, means for transmitting a beam of light from one point on said record to said light reacting means, means for exposing different portions of said record to said beam to produce varying pulsations or undulations in said circuit, a receiving surface, and means controlled by said pulsations for photographically reproducing on said receiving surface said record of variations in light.

59. The combination with means for transmitting electric pulsations, of means connected therewith which react to light, a

pulsations or variations it is desired to reproduce, a circuit including a reproducer and a conductor whose resistance may be varied by light, means for moving said record along in proximity to said conductor, and means for projecting light through said record upon said conductor.

33. A record of pulsations in sound consisting of a thin sheet rendered translucent in degrees corresponding to said pulsations photographically-produced thereon and capable of reproducing the sound.

34. A record of pulsations in sound consisting of a strip or band photographically affected in accordance with said pulsations and capable of reproducing the sound.

35. In apparatus for recording and reproducing pulsations or variations in sound, a source of radiant energy, a movable record blank in proximity thereto sensitive to and capable of being affected by said energy for receiving and retaining a record of said energy, means for moving said record blank along, means for varying the amount of said energy admitted to said blank and thereby producing a characteristic change in said blank in accordance with said pulsations or variations to form a record and means for utilizing said record to reproduce the sound.

36. In apparatus for recording and reproducing pulsations or variations in sound, a movable strip or band sensitive to radiant energy, means for forming thereon a record of said pulsations or variations by the direct action of said radiant energy, reproducing means capable of being affected in accordance with said record and reproducing the sound, and means for moving said strip or band along in operative relation to said reproducing means.

37. The combination with a source of radiant energy, of a movable record blank operatively related thereto capable of being affected by said radiant energy, means for moving said record blank and means for varying the amount of said energy supplied to said record blank in accordance with pulsations or variations in sound to produce a characteristic change in said record blank and thereby form a record capable of reproducing the sound.

38. In apparatus for reproducing sound, a record having photographically produced thereon a representation of the pulsations or variations it is desired to reproduce, a circuit including a source of current a telephone and a selenium cell, means for suitably moving said record in operative proximity to said selenium cell and means for projecting light through said record upon said cell.

39. The combination of a translucent photo- and a selenium cell, means for suitably moving said record and means for projecting light through said record upon said selenium cell.

40. In instruments of the class described, in combination, a photo-electric cell included in a telephone-circuit, a moving photographic sound-record, and means for passing light through said record to the cell, substantially as set forth.

41. The method of recording and reproducing sounds consisting in forming a photographic record of the sounds by directing actinic rays emanating from a source thereof upon a photo-sensitive surface and varying the said rays reaching said surface by and in accordance with the sound waves, then developing the photo-sensitive surface, then interposing the sound record so produced in the path of a constant beam of light, setting up in an electric circuit electric variations by and in accordance with the variations of the transmitted light-beam, and producing by said electric variations air vibrations corresponding to the original sound.

42. The method of recording sounds consisting in forming a photographic record of the sounds by directing actinic rays emanating from a source thereof upon a photo-sensitive surface and varying the amount of said emanations by and in accordance with the sound waves.

43. The method of recording sounds consisting in setting up in a charged electric circuit variations corresponding to the sound waves, controlling actinic radiations by and in accordance with said electric variations, and directing said actinic radiations upon a photo-sensitive surface.

44. In a device of the class described the combination with a photo-sensitive surface and a source of actinic rays movable relative one to the other, and means for controlling the said rays reaching said surface by and in accordance with sound waves.

45. In a device of the class described the combination with a source of light rays, of a photo-sensitive surface, means for moving said surface across said light rays, and means for controlling the amount of said rays reaching said surface by and in accordance with sound waves.

46. In a device of the class described the combination with a source of light rays, of a photo-sensitive surface, means for moving said surface across said light rays, and means for controlling the width of the beam of rays transversely of the moving surface by and in accordance with sound waves whereby a record varying in width will be produced.

47. A sound record consisting of a record

blank photographically affected in accordance with sound pulsations and capable of reproducing the sound.

48. The method of producing phonographic records capable of reproducing sound consisting in first obtaining a photographic pattern or negative representing pulsations in sound and then producing commercial copies from said negative.

49. A pattern or negative having photographically recorded thereon pulsations in sound and capable of use as a master record in producing therefrom commercial copies capable of reproducing the original pulsations in sound.

50. The combination with an electric circuit, of means for telephonically transmitting sounds thereon, a movable receiving surface, means for recording there n the transmitted sounds, and means for automatically moving said surface to receive the record, the said movement being controlled by the telephonic transmitting means.

51. The combination with an electric circuit, of means for telephonically transmitting sounds thereon, a distant movable receiving surface, means for moving said surface, means for recording on the moving surface the transmitted sounds, and means accessible at the transmitting point for controlling the movement of the receiving surface.

52. The combination with an electric circuit, of means for telephonically transmitting sounds thereon, a distant movable receiving surface, means tending to move said surface, a stop normally preventing movement of said surface, means accessible at the transmitting point for controlling said stop to permit the movement of said surface, and means for recording on the moving surface the transmitted sounds.

53. In a system of the class described the combination with an electric circuit, of means for transmitting to a distant point in said circuit telephonic messages, a second electric circuit at said distant point, means for receiving the sound pulsations in said first circuit at said distant point and for making a record thereof, and means operated by said record for impressing said pulsations on said second circuit whereby the message will be relayed, and means for reproducing as sound the relayed message.

54. The combination with an electric circuit, of a selenium cell therein, a movable sending blank having a record of visible forms thereon, means for transmitting a beam of light modified by said record to said selenium cell to modify the electric pulsations in said circuit, means for moving said record to bring successive portions thereof under the influence of said beam, a receiving blank, means for moving said receiving blank, and means controlled by the pulsations in said circuit for reproducing on said receiving blank the record of visible forms on said sending blank.

55. The combination with an electric circuit, of a selenium cell therein, a record surface different portions of which affect light differently, means for directing a beam of light from one point on said surface to said selenium cell the said beam being modified by said record, means for moving said record surface to bring successive portions under the influence of said beam directed to said selenium cell whereby varying pulsations or undulations will be set up in said circuit, a receiving surface, means for moving said surface, and means controlled by the pulsations in said circuit for reproducing on said receiving surface the original record.

56. The combination with an electric circuit, of a selenium cell therein, a record of visible forms, means for transmitting a beam of light from one point on said record to said cell, means for exposing different portions of said record to said beam to produce varying pulsations or undulations in said circuit, a receiving surface, and means controlled by said pulsations for reproducing on said receiving surface said record of visible forms.

57. The combination with an electric circuit, of means therein which react to light, a sending surface having recorded thereon variations in light, means for transmitting a beam of light from one point on said record to said light reacting means, means for exposing different portions of said record to said beam to produce varying pulsations or undulations in said circuit, a receiving surface, and means controlled by said pulsations for reproducing on said receiving surface said record of variations in light.

58. The combination with an electric circuit, of means therein which react to light, a sending surface having recorded thereon variations in light, means for transmitting a beam of light from one point on said record to said light reacting means, means for exposing different portions of said record to said beam to produce varying pulsations or undulations in said circuit, a receiving surface, and means controlled by said pulsations for photographically reproducing on said receiving surface said record of variations in light.

59. The combination with means for transmitting electric pulsations, of means connected therewith which react to light, a surface having a record of visible forms thereon, means for transmitting light varied by said record to said light reacting means producing pulsations therein, a receiving surface, and means controlled by said pulsations for reproducing on said receiving surface said record of visible forms.

60. In a device for reproducing variations in light and sound the combination with a movable record, of a receiving surface, means operated by said record for projecting upon said receiving surface in rapid succession a series of photographic impressions, and separate means operated by said record for reproducing sound recorded in regular order thereon.

61. The combination with a record having thereon visible representations of variations in light in sequence, of a source of light, a receiving surface, means for moving said record and for exposing said visible representations to said light in regular order and for transmitting said light varied by said visible representations to said receiving surface, and separate means operated by said record for reproducing sound recorded thereon in regular order.

62. In a device of the class described the combination with a speaking diaphragm, of a movable photo-sensitive record blank, a source of light, and means controlled by said diaphragm for throwing a beam of light on said record blank.

63. In a device of the class described, the combination with a speaking diaphragm, of a movable photo-sensitive record blank, a source of light, and a reflecting surface controlled by said diaphragm for throwing a beam from said source of light on said record blank.

64. In a device of the class described, the combination with a speaking diaphragm, of a movable photo-sensitive record blank, a source of light, and a reflecting surface carried by and partaking of the movements of said diaphragm for throwing a beam from said source of light on said record blank.

65. In a device of the class described the combination with a speaking diaphragm, of a movable photo-sensitive record blank, means for concentrating a beam of light on said blank, and means operated by said diaphragm for controlling said beam of light.

66. In a device of the class described the combination with a speaking diaphragm, of a movable photo-sensitive record blank, a source of light, a reflector for directing rays from said source of light to said blank, and means operated by said diaphragm for controlling said beam.

67. In a device of the class described the combination with a speaking diaphragm, of a movable photo-sensitive record blank, means for directing a beam of light toward said blank, means operated by said diaphragm for controlling and modifying said beam, and a lens for concentrating said modified beam upon said blank.

68. The method of making sound records tions whereby a photographic line will be produced developing and fixing said line and treating said record to intensify said photographic effect.

69. The method of making sound producing records which consists in photographically recording sound pulsations on a surface and so treating said surface as to make the record more pronounced and permanent.

70. In a device of the class described the combination with a movable record having a succession of photographic impressions thereon, means for directing light rays to a point across which said photographic impressions pass and for projecting the rays modified by said record to a receiving surface, and means for reproducing said photographic impressions at a distance comprising an electric circuit including means which react to light exposed to rays modified by said photographic impressions on said record.

71. In a device of the class described the combination with a movable record having a succession of photographic impressions thereon, means for directing light rays to a point across which said photographic impressions pass and for projecting the rays modified by said record to a receiving surface, and means for reproducing said photographic impressions at a distance comprising an electric circuit including a selenium cell exposed to rays modified by said photographic impressions on said record.

72. In a device of the class described the combination with a movable record having a succession of photographic impressions thereon, an electric circuit having therein means which react to light, means for directing light rays from said photographic impressions to said light reacting means, and means controlled by the current in said circuit for reproducing said photographic impressions at a distance.

73. In a device of the class described the combination with a movable record having a succession of photographic impressions thereon, an electric circuit having therein a selenium cell, means for directing light rays from said photographic impressions to said selenium cell, and means controlled by the current in said circuit for reproducing said photographic impressions at a distance.

74. In an apparatus for transmitting vocal and other sounds, the combination with means for making a record of the sound vibration, of an electric circuit, means operated by said record for producing in said circuit similar electrical vibrations of greater rate, means for transforming said electrical vibrations into mechanical vibrations, means for recording said mechanical vibrations on

75. The combination with means for producing a record of sound waves, an electric circuit, means controlled by said record for transmitting electrical waves, impulses or undulations of current in said circuit corresponding to said sound waves in amplitude but having a different rate of vibration or pitch, and means for recording said waves at the receiving end of the circuit.

76. In an apparatus for reproducing sounds at a distance, the combination with means for making a record of sound, an electric circuit including a controller, means controlled by said record for operating said controller to set up electric waves or undulations of current corresponding in character to the sound waves but having a different period, means operated by said transmitted waves for producing a record of said waves, and means operated by said last mentioned record for producing audible sound.

77. The combination with a speaking diaphragm, of a movable record surface, and means for recording on said surface the movements of different parts of said diaphragm under the influence of sound pulsations.

78. The combination with a speaking diaphragm, of a movable record surface and a series of elements separately connected to and partaking of the movements of said diaphragm at different points across it for recording said movements on said record.

79. In instruments of the class described, in combination, means which react to light included in a telephone circuit, a movable visible sound-record, and means for passing light modified by and in accordance with said visible record to the said light reacting means substantially as set forth.

80. A photographically produced sound record capable of reproducing the sound recorded thereon.

81. A sound record consisting of a photographically produced pattern of sound characterized by a difference in elevation from adjacent portions of the record surface.

82. A record of sound made from a photographically produced record of sound and capable of reproducing the sound.

83. A sound record consisting of a photographically produced pattern of sound waves and capable of reproducing the sound.

84. The method of making a sound record which consists in photographically affecting a sensitive surface in accordance with sound waves.

85. The method of making a sound record which consists in photographically affecting

86. The method of producing commercial sound records which consists in photographically recording sound waves embossing said record and making commercial records capable of reproducing the sound from said embossed record as a master record.

87. The method of making sound producing records which consists in photographically recording sound pulsations on a surface and so treating said surface as to make the record more pronounced and permanent and then producing by the use of said photographically produced record commercial sound records capable of reproducing the sound.

88. The method of making sound records which consists in exposing a moving light sensitive record surface to a beam of light controlled in accordance with sound pulsations whereby a photographic line will be produced developing and fixing said line and treating said record to intensify said photographic effect and then producing by the use of said photographically produced record commercial sound records capable of reproducing the sound.

89. An apparatus for transmitting to a distance by telegraphic or telephonic methods a record of variations in light comprising means at the sending station which react to light to cause electrical variations corresponding to the variations in light, means at the receiving station for translating said electrical variations into corresponding variations in light intensity, and means for recording said last mentioned variations.

90. Means for electrically transmitting graphic messages including a message sheet of varying degree of transparency a source of light, means for projecting the light from said source of light through the portions of said message sheet successively, means which react to light upon which the rays of light are projected after passing through said message sheet, an electrical circuit including said light reacting means, means for transmitting the various undulations in the intensity of the current in said circuit caused by the action of the light rays upon the light reacting means to a receiving station, and a reproducing instrument including means for translating the varying undulations of said current into a visible reproduction of the transmitting message.

91. Means for electrically transmitting graphic messages including a visible record, a source of light, means which react to light, means for projecting upon said light reacting means rays from said source of light

jecting upon said receiving surface in rapid succession a series of photographic impressions, and separate means operated by said record for reproducing sound recorded in regular order thereon.

61. The combination with a record having thereon visible representations of variations in light in sequence, of a source of light, a receiving surface, means for moving said record and for exposing said visible representations to said light in regular order and for transmitting said light varied by said visible representations to said receiving surface, and separate means operated by said record for reproducing sound recorded thereon in regular order.

62. In a device of the class described the combination with a speaking diaphragm, of a movable photo-sensitive record blank, a source of light, and means controlled by said diaphragm for throwing a beam of light on said record blank.

63. In a device of the class described, the combination with a speaking diaphragm, of a movable photo-sensitive record blank, a source of light, and a reflecting surface controlled by said diaphragm for throwing a beam from said source of light on said record blank.

64. In a device of the class described, the combination with a speaking diaphragm, of a movable photo-sensitive record blank, a source of light, and a reflecting surface carried by and partaking of the movements of said diaphragm for throwing a beam from said source of light on said record blank.

65. In a device of the class described the combination with a speaking diaphragm, of a movable photo-sensitive record blank, means for concentrating a beam of light on said blank, and means operated by said diaphragm for controlling said beam of light.

66. In a device of the class described the combination with a speaking diaphragm, of a movable photo-sensitive record blank, a source of light, a reflector for directing rays from said source of light to said blank, and means operated by said diaphragm for controlling said beam.

67. In a device of the class described the combination with a speaking diaphragm, of a movable photo-sensitive record blank, means for directing a beam of light toward said blank, means operated by said diaphragm for controlling and modifying said beam, and a lens for concentrating said modified beam upon said blank.

68. The method of making sound records which consists in exposing a moving light sensitive record surface to a beam of light controlled in accordance with sound pulsations to produce a photographic effect.

69. The method of making sound producing records which consists in photographically recording sound pulsations on a surface and so treating said surface as to make the record more pronounced and permanent.

70. In a device of the class described the combination with a movable record having a succession of photographic impressions thereon, means for directing light rays to a point across which said photographic impressions pass and for projecting the rays modified by said record to a receiving surface, and means for reproducing said photographic impressions at a distance comprising an electric circuit including means which react to light exposed to rays modified by said photographic impressions on said record.

71. In a device of the class described the combination with a movable record having a succession of photographic impressions thereon, means for directing light rays to a point across which said photographic impressions pass and for projecting the rays modified by said record to a receiving surface, and means for reproducing said photographic impressions at a distance comprising an electric circuit including a selenium cell exposed to rays modified by said photographic impressions on said record.

72. In a device of the class described the combination with a movable record having a succession of photographic impressions thereon, an electric circuit having therein means which react to light, means for directing light rays from said photographic impressions to said light reacting means, and means controlled by the current in said circuit for reproducing said photographic impressions at a distance.

73. In a device of the class described the combination with a movable record having a succession of photographic impressions thereon, an electric circuit having therein a selenium cell, means for directing light rays from said photographic impressions to said selenium cell, and means controlled by the current in said circuit for reproducing said photographic impressions at a distance.

74. In an apparatus for transmitting vocal and other sounds, the combination with means for making a record of the sound vibration, of an electric circuit, means operated by said record for producing in said circuit similar electrical vibrations of greater rate, means for transforming said electrical vibrations into mechanical vibrations, means for recording said mechanical vibrations on a phonogram blank, and means for reproducing the original sound from said phonogram.

75. The combination with means for producing a record of sound waves, an electric circuit, means controlled by said record for transmitting electrical waves, impulses or undulations of current in said circuit corresponding to said sound waves in amplitude but having a different rate of vibration or pitch, and means for recording said waves at the receiving end of the circuit.

76. In an apparatus for reproducing sounds at a distance, the combination with means for making a record of sound, an electric circuit including a controller, means controlled by said record for operating said controller to set up electric waves or undulations of current corresponding in character to the sound waves but having a different period, means operated by said transmitted waves for producing a record of said waves, and means operated by said last mentioned record for producing audible sound.

77. The combination with a speaking diaphragm, of a movable record surface, and means for recording on said surface the movements of different parts of said diaphragm under the influence of sound pulsations.

78. The combination with a speaking diaphragm, of a movable record surface and a series of elements separately connected to and partaking of the movements of said diaphragm at different points across it for recording said movements on said record.

79. In instruments of the class described, in combination, means which react to light included in a telephone circuit, a movable visible sound-record, and means for passing light modified by and in accordance with said visible record to the said light reacting means substantially as set forth.

80. A photographically produced sound record capable of reproducing the sound recorded thereon.

81. A sound record consisting of a photographically produced pattern of sound characterized by a difference in elevation from adjacent portions of the record surface.

82. A record of sound made from a photographically produced record of sound and capable of reproducing the sound.

83. A sound record consisting of a photographically produced pattern of sound waves and capable of reproducing the sound.

84. The method of making a sound record which consists in photographically affecting a sensitive surface in accordance with sound waves.

85. The method of making a sound record which consists in photographically affecting a sensitive surface in accordance with sound waves and then producing by the use of said photographically produced record commercial sound records capable of reproducing the sound.

86. The method of producing commercial sound records which consists in photographically recording sound waves embossing said record and making commercial records capable of reproducing the sound from said embossed record as a master record.

87. The method of making sound producing records which consists in photographically recording sound pulsations on a surface and so treating said surface as to make the record more pronounced and permanent and then producing by the use of said photographically produced record commercial sound records capable of reproducing the sound.

88. The method of making sound records which consists in exposing a moving light sensitive record surface to a beam of light controlled in accordance with sound pulsations whereby a photographic line will be produced developing and fixing said line and treating said record to intensify said photographic effect and then producing by the use of said photographically produced record commercial sound records capable of reproducing the sound.

89. An apparatus for transmitting to a distance by telegraphic or telephonic methods a record of variations in light comprising means at the sending station which react to light to cause electrical variations corresponding to the variations in light, means at the receiving station for translating said electrical variations into corresponding variations in light intensity, and means for recording said last mentioned variations.

90. Means for electrically transmitting graphic messages including a message sheet of varying degree of transparency a source of light, means for projecting the light from said source of light through the portions of said message sheet successively, means which react to light upon which the rays of light are projected after passing through said message sheet, an electrical circuit including said light reacting means, means for transmitting the various undulations in the intensity of the current in said circuit caused by the action of the light rays upon the light reacting means to a receiving station, and a reproducing instrument including means for translating the varying undulations of said current into a visible reproduction of the transmitting message.

91. Means for electrically transmitting graphic messages including a visible record, a source of light, means which react to light, means for projecting upon said light reacting means rays from said source of light modified by and in accordance with successive portions of said record, an electrical circuit including said light reacting means, means for transmitting the various undulations in the intensity of the current in said

circuit caused by the action of the light rays upon the light reacting means to a receiving station, and reproducing means for translating the varying undulations of said current into a visible reproduction of the transmitting record.

92. The combination with an electric circuit, of means therein which react to light to cause pulsations in said circuit corresponding to the variations in light reaching said means, light controlling means including a shutter, and means operated by the pulsations in said circuit for controlling the movements of said shutter.

93. The combination with a source of light, of a movable record of variations in light adapted to modify the light transmitted from said source, an electric circuit, means therein which react to light exposed to the action of said modified light to cause pulsations in said circuit corresponding to said variations, light controlling means, and means operated by the pulsations in said circuit for operating said light controlling means in accordance with the modifications of light by said record.

94. Means for recording and reproducing sound waves comprising a movable sensitized surface, means for moving said surface, an inclosure therefor, two shutters having coöperating light openings for controlling light reaching said surface, and means for moving one of said shutters by and in accordance with sound pulsations.

95. Means for recording and reproducing sound waves comprising a casing, a movable sensitized surface therein, means for moving said surface, a shutter for controlling the admission of light to said surface in said casing, and means for vibrating said shutter by and in accordance with sound waves.

96. Means for recording and reproducing sound waves comprising a casing, a movable sensitized surface therein, means for moving said surface, means for producing a constant light, a shutter for controlling the admission of said light to said surface in said casing, and means for vibrating said shutter by and in accordance with sound waves.

CHARLES EDGAR FRITTS.

In presence of—
C. L. WILBUR,
R. GERRELL.

Copies of this patent may be obtained for five cents each, by addressing the "Commissioner of Patents, Washington, D. C."

Correction in Letters Patent No. 1,203,190.

It is hereby certified that in Letters Patent No. 1,203,190, granted October 31, 1916, upon the application of Charles Edgar Fritts, of New York, N. Y., for an improvement in "Recording and Reproduction of Pulsations or Variations in Sounds and other Phenomena," an error appears in the printed specification requiring correction as follows: Page 23, lines 4–5, claim 48, for the word "phonographic" read *sound;* and that the said Letters Patent should be read with this correction therein that the same may conform to the record of the case in the Patent Office.

Signed and sealed this 26th day of December, A. D., 1916.

[SEAL.]

R. F. WHITEHEAD,

Acting Commissioner of Patents.

1076

E. H. AMET.

APPARATUS FOR PRODUCING COMPANION AUDITORY AND VISUAL RECORDS FOR SIMULTANEOUS REPRODUCTION.

APPLICATION FILED APR. 21, 1913.

1,221,407. Patented Apr. 3, 1917.

Fig. 1.

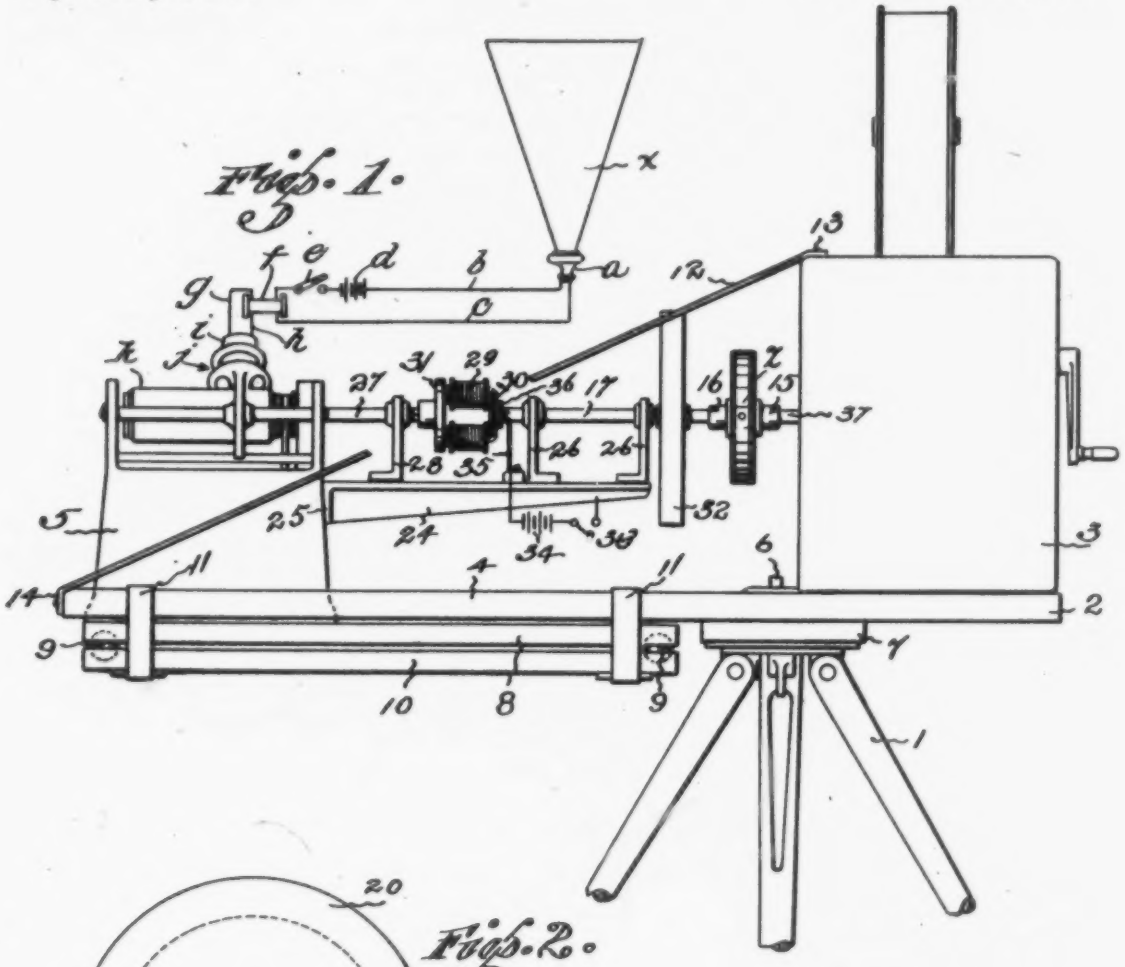

Fig. 2.

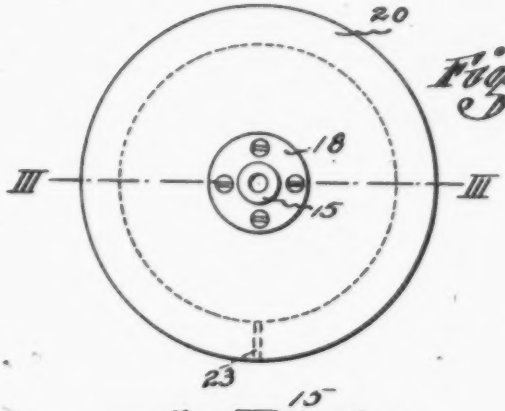

Fig. 4.

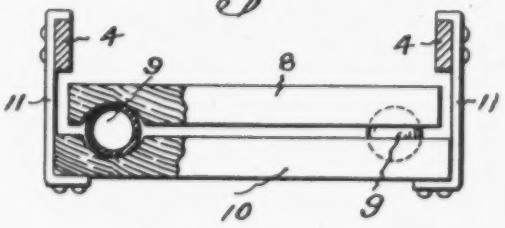

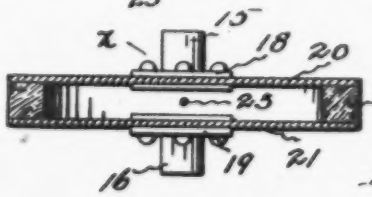

Fig. 3.

WITNESSES:

Baldwin Wallace.

INVENTOR.

Edward H. Amet.

BY Miller & Miller

ATTORNEYS

UNITED STATES PATENT OFFICE.

EDWARD H. AMET, OF REDONDO BEACH, CALIFORNIA.

APPARATUS FOR PRODUCING COMPANION AUDITORY AND VISUAL RECORDS FOR SIMULTANEOUS REPRODUCTION.

1,221,407. Specification of Letters Patent. Patented Apr. 3, 1917.

Original application filed December 22, 1912, Serial No. 738,809. Divided and this application filed April 21, 1913. Serial No. 762,553.

To all whom it may concern:

Be it known that I, EDWARD H. AMET, a citizen of the United States, and a resident of Redondo Beach, in the county of Los Angeles, State of California, have invented a new and useful Apparatus for Producing Companion Auditory and Visual Records for Simultaneous Reproduction, of which the following is a specification.

Attention is directed to my co-pending application filed Dec. 22, 1912, Serial No. 738,809, out of which application this application has been divided.

An object of this invention is to provide means whereby companion photographic and sound records may be so made that the reproduction of desired scenes with their accompanying sounds may be effected in a satisfactory manner.

In order to effect such satisfactory reproduction it is necessary that the sound and picture records shall be produced in unison, and that the sound record shall be kept free from markings produced otherwise than atmospherically.

The synchronous production of companion motion picture and sound records for the reproduction of motion pictures with sound accompaniment has long been sought, but in making such reproductions available to the public certain difficulties are encountered, some of the causes of which I will now point out, viz:

The sound collecting means must be sufficiently close to the motion picture subject to collect the sound accompanying the action. The motion picture machine and sound recording machine should be directly coupled to secure absolute synchronism in the simplest way, but the motion picture machine produces mechanical sounds which are apt to be made a part of the sound record and which would be objectionable in a reproduction of sounds to accompany the picture, and the direct coupling has heretofore proven unsatisfactory.

An object of this invention is to produce an apparatus in which the two record-making machines are directly coupled and which will effectively avoid all the difficulties involved and will enable the operator with perneous mechanical noises, the action and sound of the motion picture subject.

The motion picture machine should be movably mounted so as to bring the motion picture subject within the range of the camera. Such camera movement should be independent of the placement of the sound collecting means. The motion picture machine and the sound recording machine must operate with exact synchronism. Means for maintaining synchronism between the motion picture machine and the sound recording machine, when such machines are placed at any considerable distance apart, are necessarily extensive or intricate and require more or less personal attention for keeping the connecting apparatus, of electrical or other character, true. The motion picture machine and the sound recording machine must be close together in order to mechanically connect the two machines for synchronous operation. This I do by mounting the motion picture machine on a base having a hollow frame extension at its side and the sound recording machine on a base suspended in said hollow frame alongside of the other base and by making the picture machine base sufficiently movable to secure the required range for the camera, directly coupling the two machines together in alinement for synchronous action, providing means to effect said coupling and also providing non-vibration-transmitting mounting means for supporting the sound record machine on the suspended base; and actuating the sound recording machine telephonically by means of a sound collector in a telephonic circuit.

I regard this invention as pioneer in that I directly connect the driven shaft of a motion picture machine with the drive shaft of a phonographic machine by means of a non-vibration-transmitting coupling interposed between the ends of said shafts and provide a non-vibration-transmitting mounting interposed between the bodies of said machines to prevent the transmission to the recording stylus of mechanical vibration foreign to the desired phonographic record.

The invention possesses other advantageous features which, with the foregoing, will be set forth at length in the following de-

1,221,407.

APPLICATION FILED APR. 21, 1913.

Patented Apr. 3, 1917.

Fig. 1.

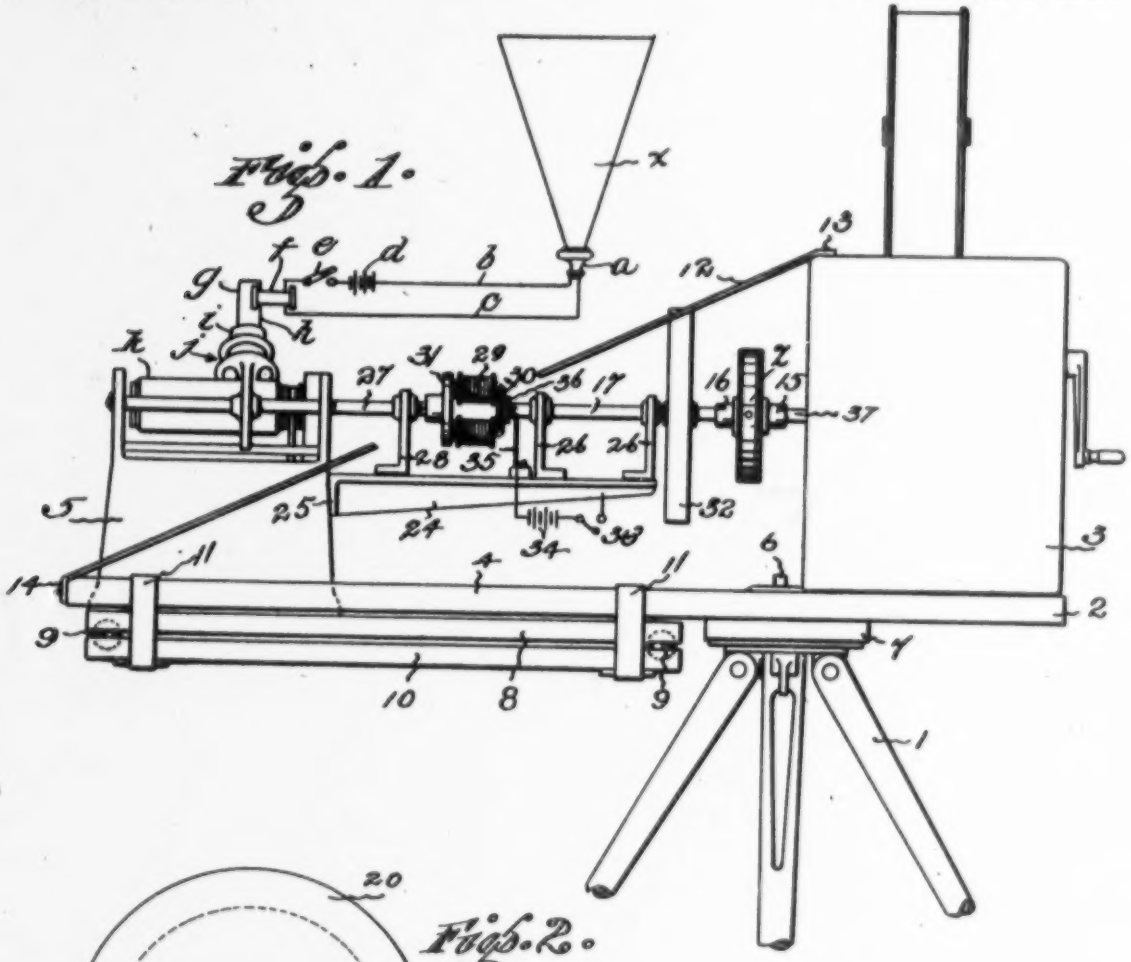

Fig. 2.

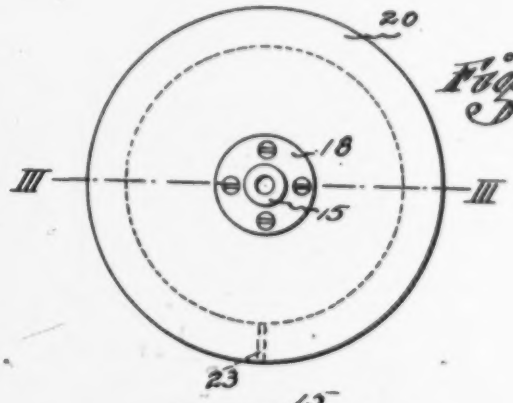

Fig. 4.

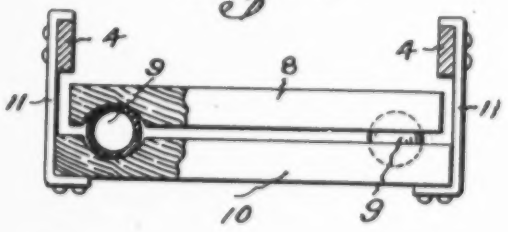

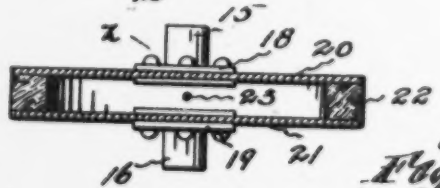

Fig. 3.

WITNESSES:

Baldwin Vale.

J. B. Gardner.

INVENTOR.

Edward H. Angst.

BY Miller & Polk

ATTORNEYS.

EDWARD H. AMET, OF REDONDO BEACH, CALIFORNIA.

APPARATUS FOR PRODUCING COMPANION AUDITORY AND VISUAL RECORDS FOR SIMULTANEOUS REPRODUCTION.

1,221,407. Specification of Letters Patent. Patented Apr. 3, 1917.

Original application filed December 22, 1912, Serial No. 738,809. Divided and this application filed April 21, 1913. Serial No. 762,553.

To all whom it may concern:

Be it known that I, EDWARD H. AMET, a citizen of the United States, and a resident of Redondo Beach, in the county of Los Angeles, State of California, have invented a new and useful Apparatus for Producing Companion Auditory and Visual Records for Simultaneous Reproduction, of which the following is a specification.

Attention is directed to my co-pending application filed Dec. 22, 1912, Serial No. 738,809, out of which application this application has been divided.

An object of this invention is to provide means whereby companion photographic and sound records may be so made that the reproduction of desired scenes with their accompanying sounds may be effected in a satisfactory manner.

In order to effect such satisfactory reproduction it is necessary that the sound and picture records shall be produced in unison, and that the sound record shall be kept free from markings produced otherwise than atmospherically.

The synchronous production of companion motion picture and sound records for the reproduction of motion pictures with sound accompaniment has long been sought, but in making such reproductions available to the public certain difficulties are encountered, some of the causes of which I will now point out, viz:

The sound collecting means must be sufficiently close to the motion picture subject to collect the sound accompanying the action. The motion picture machine and sound recording machine should be directly coupled to secure absolute synchronism in the simplest way, but the motion picture machine produces mechanical sounds which are apt to be made a part of the sound record and which would be objectionable in a reproduction of sounds to accompany the picture, and the direct coupling has heretofore proven unsatisfactory.

An object of this invention is to produce an apparatus in which the two record-making machines are directly coupled and which will effectively avoid all the difficulties involved and will enable the operator with perfect ease and freedom to secure synchronous companion records which can be successfully employed for reproducing without extraneous mechanical noises, the action and sound of the motion picture subject.

The motion picture machine should be movably mounted so as to bring the motion picture subject within the range of the camera. Such camera movement should be independent of the placement of the sound collecting means. The motion picture machine and the sound recording machine must operate with exact synchronism. Means for maintaining synchronism between the motion picture machine and the sound recording machine, when such machines are placed at any considerable distance apart, are necessarily extensive or intricate and require more or less personal attention for keeping the connecting apparatus, of electrical or other character, true. The motion picture machine and the sound recording machine must be close together in order to mechanically connect the two machines for synchronous operation. This I do by mounting the motion picture machine on a base having a hollow frame extension at its side and the sound recording machine on a base suspended in said hollow frame alongside of the other base and by making the picture machine base sufficiently movable to secure the required range for the camera, directly coupling the two machines together in alinement for synchronous action, providing means to effect said coupling and also providing non-vibration-transmitting mounting means for supporting the sound record machine on the suspended base; and actuating the sound recording machine telephonically by means of a sound collector in a telephonic circuit.

I regard this invention as pioneer in that I directly connect the driven shaft of a motion picture machine with the drive shaft of a phonographic machine by means of a non-vibration-transmitting coupling interposed between the ends of said shafts and provide a non-vibration-transmitting mounting interposed between the bodies of said machines to prevent the transmission to the recording stylus of mechanical vibration foreign to the desired phonographic record.

The invention possesses other advantageous features which, with the foregoing, will be set forth at length in the following description, where I shall outline in full that form of invention selected for illustration in the drawings accompanying and forming

part of the present specification. The novelty of the invention will be included in the claims succeeding said description. From this it will be apparent that I do not restrict myself to the showing made by said drawings and description, as I may adopt many variations within the scope of my invention as expressed in said claims.

To insure definite uniformity in the speed of the respective machines, the most practical method is to mount thte phonograph record mandrel on an integral extension of the drive shaft of the motion picture camera. The essential disadvantage of this is the conductivity of the shaft, for vibratory sounds emanating from the camera and conducted to and absorbed by the phonograph record. After long and tedious experimenting, the novel shaft coupling herein disclosed, preferably consisting of a drumlike structure having the contiguous shaft ends attached to the leather heads of the drum, was evolved and found to perfectly isolate the phonographic record from all extraneous vibrations conducted by the camera shaft.

In the drawings:

Figure 1 is a view partly diagrammatic and partly in side elevation of apparatus constructed in accordance with this invention.

Fig. 2 is an end elevation of the non-vibration-transmitting shaft coupling interposed between the shafts of the motion picture machine and the sound recording machine.

Fig. 3 is a cross section of the same taken on the line III—III, Fig. 2.

Fig. 4 is an end elevation of the non-vibration-transmitting mounting for the sound recording machine partially in cross section to disclose the placing of the interposed balls.

The art of producing "talking pictures" calls for a working combination between the record making motion picture machine or camera and the sound recording machine. Vibration and noise is characteristic of the picture machine, while absolute silence in the mechanism of the sound recording machine is essential.

Near synchronism of the phonographic record accompanying a contemporaneous motion picture is not sufficient; they must be in absolute unison, and this is possible only when they are so made and so reproduced.

In detail the construction consists of the usual motion picture tripod 1, and of the portable outfit for making records, or any suitable table or foundation in the fixed or reproducing outfit. The base consists of a plane around the vertical pivotal pin 6, fixed to the tripod head 7. The sound recording machine rests upon the support 8 which is mounted on non-vibration-transmitting means formed by hollow, spherical rubber balls 9.

The action of the hollow spherical balls 9 is peculiar, said balls being non-vibration-transmitting and having walls of even thickness. A solid ball will not accomplish the purpose of a hollow ball. A solid ball will polarize a vibration propagated on the sub-base side and communicate it (to a certain extent deadened) to the sound recording machine support 8; whereas a hollow ball under the same circumstances will conduct the vibration circumferentially and lose it at the equator by lateral distortion, or some other undefinable physical effect. Since a sphere is the only body in which all points on its surface are at an equal distance from the center of the body, a point on the surface of a spherical body will resist the same pressure to the same degree as any other point on said surface. This applies also to the hollow spheres in which the walls are of even thickness. Thus, the balls serve the purpose of resisting in all directions the pressure that may be exerted upon them by jar or otherwise, so that the sound recording machine support 8 is thereby always held in a comparatively unchanging position within the frame.

The purr of the gears and the click of the intermittent feed of the picture machine, communicated to the driven shaft 37 and to the base 2, and the extensions 4, are intercepted and eliminated by the shaft coupling *z* and by the cushioning balls 9 on the sub-base 10, which, hung in the extension frame 4 by the brackets or hangers 11 and thereby insulated from the vibrations of the base, therefore coöperates with the balls to prevent sound vibrations from the camera from reaching the sound recording machine through said base. The frame is steadied by the strap 12 extending from the top of the camera at 13 to the frame at 14.

The sound-collector *x* may be an ordinary phonograph horn and the same is connected to electrical transmitting means operated thereby and comprising a telephone transmitter circuit includnig the telephone transmatter *a;* the primary circuit, includnig the telephone transmitter wires *b*, *c*, battery *d*, switch *e*, the primary winding, not shown, of the induction coil *f*, the secondary winding, not shown, of said induction coil *f*, and the secondary circuit wires *g*, *h* on the telephone receiver *i;* the same being operatably connected with the sound recording means

shaft 17. These sleeves are provided with the flanges 18 and 19, that are fixed to the heads 20 and 21, that are joined together by being fixed (preferably by adhesion) to the annular wooden or fiber ring 22. This drumlike structure is vented through the hole 23 to relieve any concussion due to end thrust from either of the joined shafts, or the heads may be open in spider like construction. The heads 20 and 21 are preferably of oil-impregnated flexible leather, or sheet rubber having sufficient tensile strength to transmit the power necessary for rotation without buckling or distortion. Having no sound conducting properties, the heads 21 and 20 isolate the respective machine shafts, and intercept any sound vibrations that might otherwise be transmitted from the motion picture drive shaft. The flexibility of this novel coupling also compensates for any disalinement of the joined shafts and acts as a "universal joint."

The extension arm 24 is attached to the side of the sound recording machine at 25. The pillar bearings 26 attached to this arm act as mountings for the shaft 17. This shaft is fixed in axial alinement with the mandrel shaft extension 27 of the phonograph, journaled in the out bearing 28 mounted on the arm 24.

The magnetic clutch comprises the magnets 29—29 fixed upon the core bar 30, that is fixed upon the end of the shaft 17, and the armature disk 31, that is slidably splined on the end of the extension shaft 27. It is the function of this clutch to instantly and positively set, to start the phonograph mandrel rotating at full speed when the clutch circuit is closed, as hereinafter described. The shaft 17 rotates constantly with the camera shaft. The relatively heavy fly wheel 32 fixed upon the shaft 17 has more than sufficient stored momentum at all times to overcome the inertia of the sound recording machine mechanism, to instantly start the same at full speed when the magnetic clutch locks.

The magnet clutch is operated by closing the switch 33 causing the current to pass from the battery 34, through the brush contact 35 bearing against a commutator 36, to which one end of the windings of the magnet coils is attached; the opposite end of the said windings is grounded on the shaft 17 through which the current flows back through the switch 33 to the battery, completing the circuit. The armature 31 is slidable on the squared end of the shaft 27 and is instantly engaged by the attraction of the magnets 29 to start the shaft 27 at full speed when the clutch is set.

By the interposition of the coupling in

or vibratory effects emanating from the picture machine and liable to be absorbed by the phonographic record.

The phonographic record may be made telephonically whereby the receiving horn x may be located at a distance from the machine, sufficient to fail to record the operating noises of the motion picture machine.

Having thus described this invention, what I claim and desire to secure by Letters Patent is:

1. In combination with a motion picture machine having a driven shaft, a sound recording machine having its drive shaft attached to and in alinement with said driven shaft; a non-vibration-transmitting mounting for the sound recording machine, said mounting consisting of hollow, spherical balls; and a non-vibration-transmitting coupling between the ends of said shafts.

2. In combination with a base, a motion picture machine thereon having a driven shaft; a sound recording machine on said base having its drive shaft attached to and in alinement with said driven shaft; a non-vibration-transmitting coupling between the ends of said shafts; and a non-vibration-transmitting mounting between said base and said sound recording machine, said mounting consisting of hollow, spherical balls.

3. In combination with a base, a motion picture machine thereon having a driven shaft; a sound recording machine on said base having its drive shaft attached to and in alinement with said driven shaft; a non-vibration-transmitting coupling and a clutch between the ends of said shafts; and a non-vibration-transmitting and equally in all directions pressure-resisting mounting between said base and said sound recording machine.

4. An apparatus for producing companion motion pictures and sound records, comprising a base having integral therewith a hollow frame at one end; means between the hollow frame and the other end of the base for pivotally mounting said base; a motion picture machine mounted upon said base between said pivotal means and said last-named end; a non-vibration-transmitting mounting suspended from said base within said hollow frame, said mounting consisting of hollow, spherical balls; a sound recording machine mounted on said mounting; said machines being provided with shafts virtually in alinement with each other; and a non-vibration-transmitting means connecting said shafts for rotating them simultaneously.

part of the present specification. The novelty of the invention will be included in the claims succeeding said description. From this it will be apparent that I do not restrict myself to the showing made by said drawings and description, as I may adopt many variations within the scope of my invention as expressed in said claims.

To insure definite uniformity in the speed of the respective machines, the most practical method is to mount thte phonograph record mandrel on an integral extension of the drive shaft of the motion picture camera. The essential disadvantage of this is the conductivity of the shaft, for vibratory sounds emanating from the camera and conducted to and absorbed by the phonograph record. After long and tedious experimenting, the novel shaft coupling herein disclosed, preferably consisting of a drumlike structure having the contiguous shaft ends attached to the leather heads of the drum, was evolved and found to perfectly isolate the phonographic record from all extraneous vibrations conducted by the camera shaft.

In the drawings:

Figure 1 is a view partly diagrammatic and partly in side elevation of apparatus constructed in accordance with this invention.

Fig. 2 is an end elevation of the non-vibration-transmitting shaft coupling interposed between the shafts of the motion picture machine and the sound recording machine.

Fig. 3 is a cross section of the same taken on the line III—III, Fig. 2.

Fig. 4 is an end elevation of the non-vibration-transmitting mounting for the sound recording machine partially in cross section to disclose the placing of the interposed balls.

The art of producing "talking pictures" calls for a working combination between the record making motion picture machine or camera and the sound recording machine. Vibration and noise is characteristic of the picture machine, while absolute silence in the mechanism of the sound recording machine is essential.

Near synchronism of the phonographic record accompanying a contemporaneous motion picture is not sufficient; they must be in absolute unison, and this is possible only when they are so made and so reproduced.

In detail the construction consists of the usual motion picture tripod 1, and of the portable outfit for making records, or any suitable table or foundation in the fixed or reproducing outfit. The base consists of a platform 2 to receive the camera 3, and has the side extensions 4 forming a hollow frame in which the sound recording machine 5 is hung. This base is revoluble in a horizontal plane around the vertical pivotal pin 6, fixed to the tripod head 7. The sound recording machine rests upon the support 8 which is mounted on non-vibration-transmitting means formed by hollow, spherical rubber balls 9.

The action of the hollow spherical balls 9 is peculiar, said balls being non-vibration-transmitting and having walls of even thickness. A solid ball will not accomplish the purpose of a hollow ball. A solid ball will polarize a vibration propagated on the sub-base side and communicate it (to a certain extent deadened) to the sound recording machine support 8; whereas a hollow ball under the same circumstances will conduct the vibration circumferentially and lose it at the equator by lateral distortion, or some other undefinable physical effect. Since a sphere is the only body in which all points on its surface are at an equal distance from the center of the body, a point on the surface of a spherical body will resist the same pressure to the same degree as any other point on said surface. This applies also to the hollow spheres in which the walls are of even thickness. Thus, the balls serve the purpose of resisting in all directions the pressure that may be exerted upon them by jar or otherwise, so that the sound recording machine support 8 is thereby always held in a comparatively unchanging position within the frame.

The purr of the gears and the click of the intermittent feed of the picture machine, communicated to the driven shaft 37 and to the base 2, and the extensions 4, are intercepted and eliminated by the shaft coupling *z* and by the cushioning balls 9 on the sub-base 10, which, hung in the extension frame 4 by the brackets or hangers 11 and thereby insulated from the vibrations of the base, therefore coöperates with the balls to prevent sound vibrations from the camera from reaching the sound recording machine through said base. The frame is steadied by the strap 12 extending from the top of the camera at 13 to the frame at 14.

The sound-collector *x* may be an ordinary phonograph horn and the same is connected to electrical transmitting means operated thereby and comprising a telephone transmitter circuit includnig the telephone transmatter *a;* the primary circuit, includnig the telephone transmitter wires *b*, *c*, battery *d*, switch *e*, the primary winding, not shown, of the induction coil *f*, the secondary winding, not shown, of said induction coil *f*, and the secondary circuit wires *g*, *h* on the telephone receiver *i;* the same being operatably connected with the sound recording means *j*, *k* of the sound recording machine 5.

The extension sleeve couplings 15 and 16 are respectively fixed to the ends of the drive shaft of the camera and the intermediate

shaft 17. These sleeves are provided with the flanges 18 and 19, that are fixed to the heads 20 and 21, that are joined together by being fixed (preferably by adhesion) to the annular wooden or fiber ring 22. This drumlike structure is vented through the hole 23 to relieve any concussion due to end thrust from either of the joined shafts, or the heads may be open in spider like construction. The heads 20 and 21 are preferably of oil-impregnated flexible leather, or sheet rubber having sufficient tensile strength to transmit the power necessary for rotation without buckling or distortion. Having no sound conducting properties, the heads 21 and 20 isolate the respective machine shafts, and intercept any sound vibrations that might otherwise be transmitted from the motion picture drive shaft. The flexibility of this novel coupling also compensates for any disalinement of the joined shafts and acts as a "universal joint."

The extension arm 24 is attached to the side of the sound recording machine at 25. The pillar bearings 26 attached to this arm act as mountings for the shaft 17. This shaft is fixed in axial alinement with the mandrel shaft extension 27 of the phonograph, journaled in the out bearing 28 mounted on the arm 24.

The magnetic clutch comprises the magnets 29—29 fixed upon the core bar 30, that is fixed upon the end of the shaft 17, and the armature disk 31, that is slidably splined on the end of the extension shaft 27. It is the function of this clutch to instantly and positively set, to start the phonograph mandrel rotating at full speed when the clutch circuit is closed, as hereinafter described. The shaft 17 rotates constantly with the camera shaft. The relatively heavy fly wheel 32 fixed upon the shaft 17 has more than sufficient stored momentum at all times to overcome the inertia of the sound recording machine mechanism, to instantly start the same at full speed when the magnetic clutch locks.

The magnet clutch is operated by closing the switch 33 causing the current to pass from the battery 34, through the brush contact 35 bearing against a commutator 36, to which one end of the windings of the magnet coils is attached; the opposite end of the said windings is grounded on the shaft 17 through which the current flows back through the switch 33 to the battery, completing the circuit. The armature 31 is slidable on the squared end of the shaft 27 and is instantly engaged by the attraction of the magnets 29 to start the shaft 27 at full speed when the clutch is set.

By the interposition of the coupling in the shaft, and the vibration absorbing means between the base, the sound recording machine is completely isolated from any sounds or vibratory effects emanating from the picture machine and liable to be absorbed by the phonographic record.

The phonographic record may be made telephonically whereby the receiving horn *x* may be located at a distance from the machine, sufficient to fail to record the operating noises of the motion picture machine.

Having thus described this invention, what I claim and desire to secure by Letters Patent is:

1. In combination with a motion picture machine having a driven shaft, a sound recording machine having its drive shaft attached to and in alinement with said driven shaft; a non-vibration-transmitting mounting for the sound recording machine, said mounting consisting of hollow, spherical balls; and a non-vibration-transmitting coupling between the ends of said shafts.

2. In combination with a base, a motion picture machine thereon having a driven shaft; a sound recording machine on said base having its drive shaft attached to and in alinement with said driven shaft; a non-vibration-transmitting coupling between the ends of said shafts; and a non-vibration-transmitting mounting between said base and said sound recording machine, said mounting consisting of hollow, spherical balls.

3. In combination with a base, a motion picture machine thereon having a driven shaft; a sound recording machine on said base having its drive shaft attached to and in alinement with said driven shaft; a non-vibration-transmitting coupling and a clutch between the ends of said shafts; and a non-vibration-transmitting and equally in all directions pressure-resisting mounting between said base and said sound recording machine.

4. An apparatus for producing companion motion pictures and sound records, comprising a base having integral therewith a hollow frame at one end; means between the hollow frame and the other end of the base for pivotally mounting said base; a motion picture machine mounted upon said base between said pivotal means and said last-named end; a non-vibration-transmitting mounting suspended from said base within said hollow frame, said mounting consisting of hollow, spherical balls; a sound recording machine mounted on said mounting; said machines being provided with shafts virtually in alinement with each other; and a non-vibration-transmitting means connecting said shafts for rotating them simultaneously.

5. In an apparatus for producing motion pictures and sound records, comprising a motion picture machine and a sound recording machine having telephonic means for re-

ceiving and transmitting sounds to the record thereof; said machines being provided with shafts virtually in alinement with each other; a non-vibration-transmitting coupling between the ends of said shafts for driving said recording machine in synchroniam with the motion picture machine; said machines being mounted on bases; one of said bases being suspended over the other; a non-vibration-transmitting mounting between one of said machines and one of said bases, said mounting consisting of hollow, spherical balls; and a pivotal support for the suspending base.

6. An apparatus for controlling the direction of movement for a combined motion picture and sound recording machine consisting of a suspending base and a base suspended therefrom; said suspending base being pivotally mounted; said suspended base having non-vibration-transmitting means for supporting said sound recording machine thereon, said mounting consisting of hollow, spherical balls, said machines being arranged in substantially horizontal alinement with each other; and a non-vibration-transmitting coupling between said machines.

In testimony whereof, I have hereunto set my hand at San Francisco, California, this 12th day of April, 1913.

EDWARD H. AMET.

In presence of—
BALDWIN VALE,
J. B. GARDNER.

1082

C. ANDERSEN.

MOTION PICTURE MACHINE.

APPLICATION FILED AUG. 9, 1915.

1,246,217.

Patented Nov. 13, 1917.

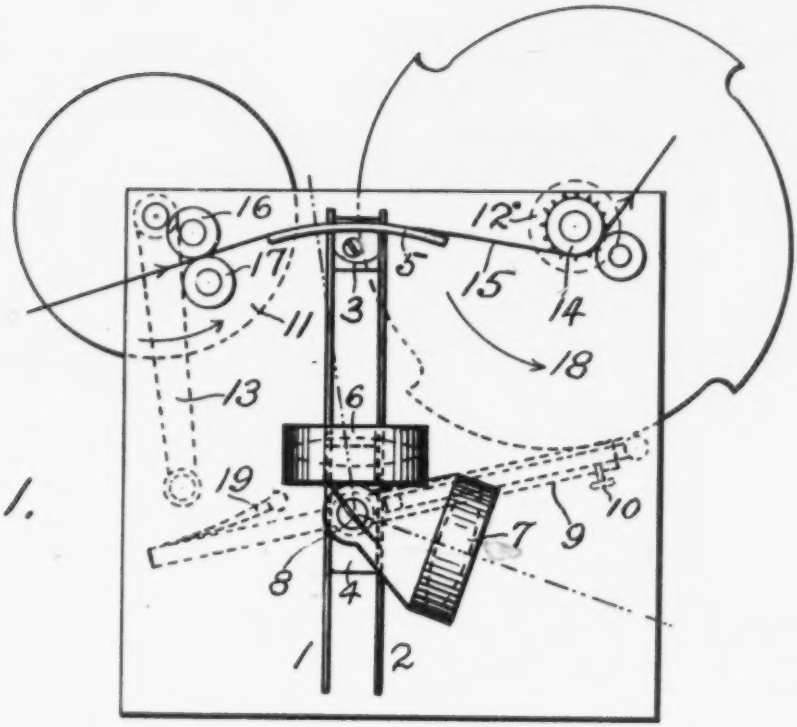

FIG. 1.

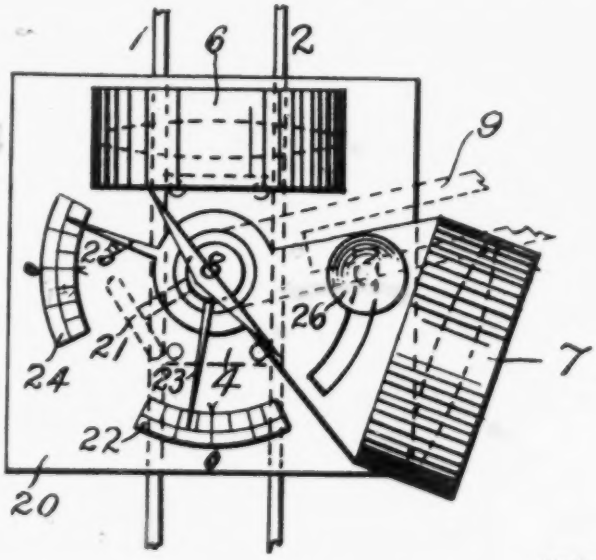

FIG. 2.

WITNESSES:

Adolph W. Starr.

INVENTOR

Christian Andersen

UNITED STATES PATENT OFFICE.

CHRISTIAN ANDERSEN, OF PORTLAND, OREGON.

MOTION-PICTURE MACHINE.

1,246,217. Specification of Letters Patent. Patented Nov. 13, 1917.

Application filed August 9, 1915. Serial No. 44,603.

To all whom it may concern:

Be it known that I, CHRISTIAN ANDERSEN, a citizen of the United States, residing in the city of Portland, county of Multnomah, and State of Oregon, have invented certain new and useful Improvements in Motion-Picture Machines, of which the following is a specification.

My invention relates to motion picture machines, and more particularly to that class of moving picture machines in which a picture film is driven continuously and uniformly, and in which a movably mounted reflector, with means for oscillating the same, is utilized to compensate for the interval of time necessary to change pictures, instead of intermittently stopping the film, said reflector being moved in synchronism with the moving film.

The principal object of my invention is to provide an improved structure in which it is possible to make certain adjustments of the reflector bodily relative to the picture film, and also to change the reflector-operating mechanism so as to regulate the oscillating movement of the reflector, which movement must necessarily be changed with each change of position of the reflector.

So far as I am aware, I am the first to mount an oscillating reflector so that it can be adjusted relative to the film, thus enabling me to regulate the distance between the reflector and the film, which is absolutely necessary in order to get results. This adjustment requires a change in the oscillating movement of the reflector, which oscillating movement depends upon its distance from the film. In other words, the closer the reflector is to the film, the greater must its angle of oscillation be, and as the reflector is moved away from the film, its angle of oscillation is proportionately reduced.

In order that others may understand my invention I have illustrated the same in the accompanying sheet of drawings which I will now describe.

Figure 1 is a side elevation of a machine embodying my invention; and

Fig. 2 is an enlarged detail view.

In the drawings here shown for purposes of illustration, I have shown the reflector mounted between the lens elements, but it is of my co-pending application filed June 21, 1915, Serial Number 35,313.

I will now describe more in detail the illustration intended to indicate one form of structure embodying my invention. In the drawings 1 and 2 designate guide members between which are movably mounted blocks 3 and 4, which can be moved up and down to different positions as required. Block 3 carries a picture film guide 5, while block 4 carries the two lenses 6 and 7, a reflector 8, an operating lever 9, having an extension, or cam-engaging portion, adapted to be held in various extended positions by means of a set screw 10, as will be clearly understood from the drawing. 11 and 12 designate two pulleys adapted to be connected by means of a belt (not shown), the pulley 11, being driven by crank 13. A sprocket 14, mounted upon the same shaft with the pulley 12, moves the picture film 15, which is guided between two rollers 16 and 17, over the picture film guide 5. An operating cam 18, is also mounted upon and driven by the same shaft upon which the pulley 12 and the sprocket 14 are mounted, said cam being adapted to operate the lever, or arm, 9, for rocking or oscillating the reflector 8. As the block 4, which carries the reflector 8, and the lenses 6 and 7 are adjusted up and down in the guide members 1 and 2, the extension of the cam lever 9, is also adjusted in order to maintain the proper relationship between the distance from the reflector to the film, and the distance from the reflector to the point of tangency, or to the point of engagement of the operating arm, on the periphery of the operating cam. This adjustment of the operating lever 9, controls the oscillating movement of the reflector. A spring 19, operates upon the opposite end of the operating lever 9, for holding its operating end yieldingly in engagement with the cam 18.

Referring to Fig. 2, a plate may be mounted upon the block 4, at the side of the guide members 1 and 2, for supporting the lenses 6 and 7, the lens 7 being adjustably mounted upon the shaft which carries the reflector 8, and being adapted to be held in different adjusted positions as by means of a thumb screw 26, as will be clear from the illustration. The shaft which carries

MOTION PICTURE MACHINE.

APPLICATION FILED AUG. 9, 1915.

1,246,217.

Patented Nov. 13, 1917.

FIG. 1.

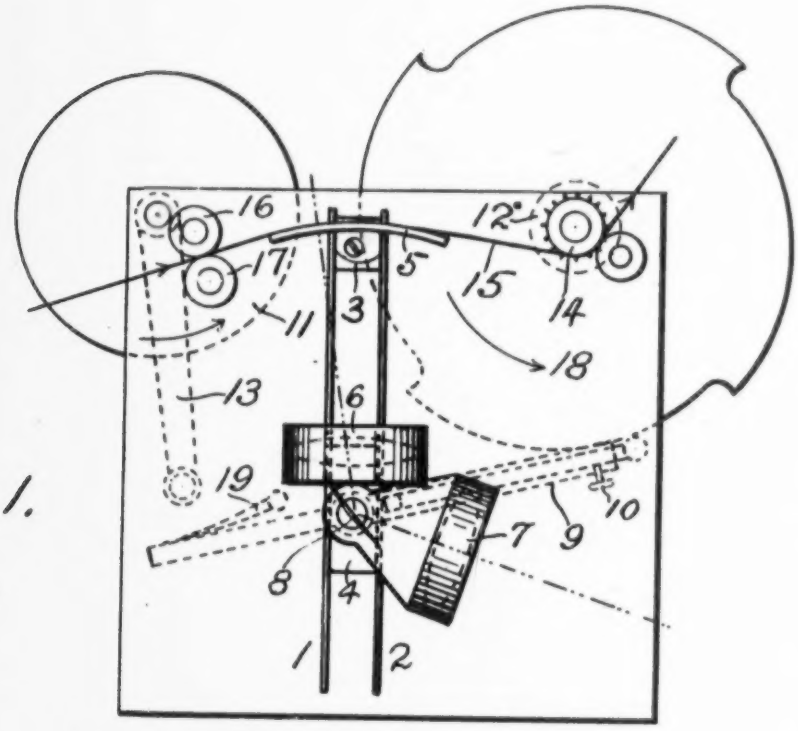

FIG. 2.

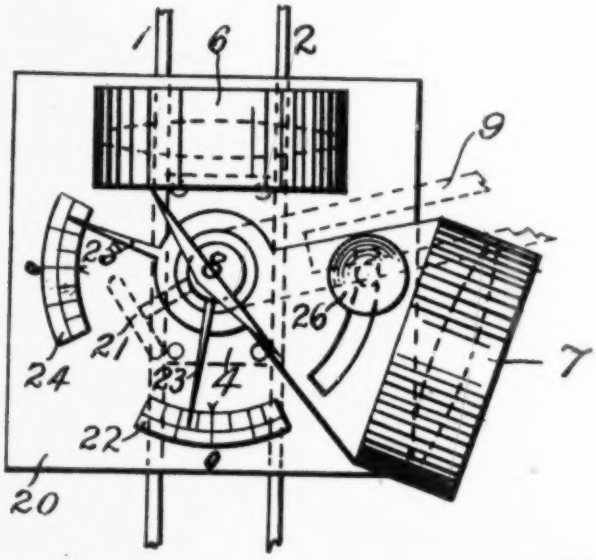

WITNESSES:

Adolph H. Harr.

Alta M. Dalton.

INVENTOR

Christian Andersen

UNITED STATES PATENT OFFICE.

CHRISTIAN ANDERSEN, OF PORTLAND, OREGON.

MOTION-PICTURE MACHINE.

1,246,217. Specification of Letters Patent. Patented Nov. 13, 1917.

Application filed August 9, 1915. Serial No. 44,603.

To all whom it may concern:

Be it known that I, CHRISTIAN ANDERSEN, a citizen of the United States, residing in the city of Portland, county of Multnomah, and State of Oregon, have invented certain new and useful Improvements in Motion-Picture Machines, of which the following is a specification.

My invention relates to motion picture machines, and more particularly to that class of moving picture machines in which a picture film is driven continuously and uniformly, and in which a movably mounted reflector, with means for oscillating the same, is utilized to compensate for the interval of time necessary to change pictures, instead of intermittently stopping the film, said reflector being moved in synchronism with the moving film.

The principal object of my invention is to provide an improved structure in which it is possible to make certain adjustments of the reflector bodily relative to the picture film, and also to change the reflector-operating mechanism so as to regulate the oscillating movement of the reflector, which movement must necessarily be changed with each change of position of the reflector.

So far as I am aware, I am the first to mount an oscillating reflector so that it can be adjusted relative to the film, thus enabling me to regulate the distance between the reflector and the film, which is absolutely necessary in order to get results. This adjustment requires a change in the oscillating movement of the reflector, which oscillating movement depends upon its distance from the film. In other words, the closer the reflector is to the film, the greater must its angle of oscillation be, and as the reflector is moved away from the film, its angle of oscillation is proportionately reduced.

In order that others may understand my invention I have illustrated the same in the accompanying sheet of drawings which I will now describe.

Figure 1 is a side elevation of a machine embodying my invention; and

Fig. 2 is an enlarged detail view.

In the drawings here shown for purposes of illustration, I have shown the reflector mounted between the lens elements, but it is to be understood that the lens elements may be mounted together in the same barrel, similar to the illustration in the drawings of my co-pending application filed June 21, 1915, Serial Number 35,313.

I will now describe more in detail the illustration intended to indicate one form of structure embodying my invention. In the drawings 1 and 2 designate guide members between which are movably mounted blocks 3 and 4, which can be moved up and down to different positions as required. Block 3 carries a picture film guide 5, while block 4 carries the two lenses 6 and 7, a reflector 8, an operating lever 9, having an extension, or cam-engaging portion, adapted to be held in various extended positions by means of a set screw 10, as will be clearly understood from the drawing. 11 and 12 designate two pulleys adapted to be connected by means of a belt (not shown), the pulley 11, being driven by crank 13. A sprocket 14, mounted upon the same shaft with the pulley 12, moves the picture film 15, which is guided between two rollers 16 and 17, over the picture film guide 5. An operating cam 18, is also mounted upon and driven by the same shaft upon which the pulley 12 and the sprocket 14 are mounted, said cam being adapted to operate the lever, or arm, 9, for rocking or oscillating the reflector 8. As the block 4, which carries the reflector 8, and the lenses 6 and 7 are adjusted up and down in the guide members 1 and 2, the extension of the cam lever 9, is also adjusted in order to maintain the proper relationship between the distance from the reflector to the film, and the distance from the reflector to the point of tangency, or to the point of engagement of the operating arm, on the periphery of the operating cam. This adjustment of the operating lever 9, controls the oscillating movement of the reflector. A spring 19, operates upon the opposite end of the operating lever 9, for holding its operating end yieldingly in engagement with the cam 18.

Referring to Fig. 2, a plate may be mounted upon the block 4, at the side of the guide members 1 and 2, for supporting the lenses 6 and 7, the lens 7 being adjustably mounted upon the shaft which carries the reflector 8, and being adapted to be held in different adjusted positions as by means of a thumb screw 26, as will be clear from the illustration. The shaft which carries the reflector 8, can be adjusted relative to the lever 9, by means of a set screw 21, for controlling the general direction from

which the pictures are to be reflected. A dial 22, and an indicator finger 23, may be used to show the relative positions of the shaft and reflector, and the dial 24 with an indicator finger 25, may be used to show the corresponding position of the lens 7. For example, if the indicator finger 25 is adjusted to the zero position of the dial 24, the pictures are reflected in horizontal direction. If the reflector shaft is clamped to the lever in a position so that the finger 23 indicates zero position on the dial 22, the reflector is adjusted to 45 degrees relative to the horizontal.

I have only shown those parts of one type of machine to which my invention is applicable which are necessary to illustrate the invention, realizing that the invention is applicable not only to a projecting machine, but to cameras as well. Wherever I have used the word "reflector", it is intended to apply to any kind of a reflecting device. My invention can be used with or without a shutter.

I do not, therefore, limit my invention to the particular embodiment here shown for purposes of illustration, or to any particular type of machine, except as I may be limited by the hereto appended claims forming a part hereof.

I claim:

1. In combination with a film and means for continuously driving the same, a lens adjustably mounted with relation to the film, a reflector adjustably mounted to be moved bodily to and from said film, means for oscillating said reflector in synchronism with the movement of said film, said means being adapted to be regulated to change the oscillating movement of said reflector according to its different positions relative to said film.

2. In combination with a film and means for continuously driving the same, a lens adjustably mounted with relation to the film, a reflector adjustably mounted to be moved bodily to and from said film, an operating cam, an operating lever for oscillating said reflector, said lever having an adjustable cam-engaging part, whereby, as said reflector is adjusted to and from said film, said operating lever can also be adjusted to control the oscillating movement of said reflector.

3. In combination with means for supporting and guiding a film, and for continuously driving the same, a reflector movably mounted to be adjusted bodily to and from said film, said reflector being also mounted to be oscillated, a lens adjustably mounted relative to said reflector and to the movement of said reflector according to its distance from said film.

4. In a device of the character referred to, in combination, a film guide adjustably mounted, means for continuously driving a film along said film guide, a reflector mounted to be adjusted bodily to and from said film guide, said reflector being also adapted to be oscillated, a lens mounted to be adjusted relative to said reflector and to the film, and means for oscillating said reflector in synchronism with the movement of said film, said means being capable of adjustment, whereby to regulate the oscillating movement of said reflector according to its distance from said film.

5. In a device of the character referred to, in combination, a film guide, means for moving a film therealong continuously, a pair of lens elements adjustably mounted to be be moved bodily to and from said film guide, a reflector mounted to oscillate between said lens elements and movable bodily therewith in their adjustment to and from said film guide, and means for oscillating said reflector in synchronism with the movement of said film, said means being capable of adjustment, whereby to regulate the oscillating movement of said reflector according to its distance from said film.

6. In a device of the character referred to, in combination, a film guide, means for moving a film therealong continuously, a pair of bodily adjustable lens elements mounted at an angle to each other, one of said lens elements being adjusted relative to the other, a reflector mounted to oscillate between said lens elements and movable bodily therewith in their adjustment to and from said film guide, and means for oscillating said reflector in synchronism with the movement of said film, said means being capable of adjustment, whereby to regulate the oscillating movement of said reflector according to its distance from said film.

7. In a device of the character referred to, in combination, a film guide adjustably mounted, means for continuously driving a film along said film guide, a reflector mounted to be adjusted bodily to and from said film guide. said reflector being also adapted to be oscillated, a lens mounted to be adjusted relative to said reflector and to the film, and means for oscillating said reflector in synchronism with the movement of said film, said means comprising an operating cam, and an operating lever extending from said reflector to said cam, said lever having an adjustable cam-engaging portion whereby to regulate the oscillating movement of said reflector according to its distance from said

pair of bodily adjustable lens elements mounted to be adjusted bodily to and from said film guide, a reflector mounted to oscillate between said lens elements and movable bodily therewith in their adjustment to and from said film guide, and means for oscillating said reflector in synchronism with the movement of said film, said lever having an adjustable cam-engaging portion whereby to regulate the oscillating movement of said reflector according to its distance from said film guide.

9. In a device of the character referred to, in combination, a film guide, means for moving a film therealong continuously, a pair of lens elements adjustably mounted in relation to the film, and at an angle to each other, one of said lens elements being adjustable relative to the other, a reflector mounted to oscillate between said lens elements and movable bodily therewith in their adjustment to and from said film guide, and means for oscillating said reflector in synchronism with the movement of said film, said lever having an adjustable cam-engaging portion, whereby to regulate the oscillating movement of said reflector according to its distance from said film guide.

10. In a device of the character referred to, in combination with a picture film and means for continuously moving the same, a reflector adjustably mounted and provided with an indicating finger and dial for indicating its angular position of adjustment, a lens adjustable relative to said reflector and provided with an indicating finger and dial for indicating its position relative to the horizontal, means for changing the distance between said film and said lens, and means for oscillating said reflector, said means being adjustable whereby to change its movement of oscillation.

11. In a device of the character referred to, in combination with a picture film and means for continuously moving the same, a film guide adjustably mounted, a reflector mounted at an angle to said film guide, said reflector being adapted to be oscillated about its axes, means for oscillating said reflector, said means being adjustable whereby to change the angle and distance of oscillation of said reflector, and a lens adjustably mounted, whereby to be adjusted to different positions relative to said reflector, substantially as described.

12. In a device of the character referred to, in combination with a picture film and means for continuously moving the same, a film guide, a lens, a reflector, means for oscillating said reflector in synchronism with the movement of said film, said means being capable of adjustment, whereby to regulate the oscillating movement of said reflector according to its distance from said film, and means for changing the distance between said film guide and said lens and reflector.

Signed at Portland, in the county of Multnomah, and State of Oregon.

CHRISTIAN ANDERSEN.

Witnesses:

ADOLPH W. HARR,

ALTA M. DALTON.

which the pictures are to be reflected. A dial 22, and an indicator finger 23, may be used to show the relative positions of the shaft and reflector, and the dial 24 with an indicator finger 25, may be used to show the corresponding position of the lens 7. For example, if the indicator finger 25 is adjusted to the zero position of the dial 24, the pictures are reflected in horizontal direction. If the reflector shaft is clamped to the lever in a position so that the finger 23 indicates zero position on the dial 22, the reflector is adjusted to 45 degrees relative to the horizontal.

I have only shown those parts of one type of machine to which my invention is applicable which are necessary to illustrate the invention, realizing that the invention is applicable not only to a projecting machine, but to cameras as well. Wherever I have used the word "reflector", it is intended to apply to any kind of a reflecting device. My invention can be used with or without a shutter.

I do not, therefore, limit my invention to the particular embodiment here shown for purposes of illustration, or to any particular type of machine, except as I may be limited by the hereto appended claims forming a part hereof.

I claim:

1. In combination with a film and means for continuously driving the same, a lens adjustably mounted with relation to the film, a reflector adjustably mounted to be moved bodily to and from said film, means for oscillating said reflector in synchronism with the movement of said film, said means being adapted to be regulated to change the oscillating movement of said reflector according to its different positions relative to said film.

2. In combination with a film and means for continuously driving the same, a lens adjustably mounted with relation to the film, a reflector adjustably mounted to be moved bodily to and from said film, an operating cam, an operating lever for oscillating said reflector, said lever having an adjustable cam-engaging part, whereby, as said reflector is adjusted to and from said film, said operating lever can also be adjusted to control the oscillating movement of said reflector.

3. In combination with means for supporting and guiding a film, and for continuously driving the same, a reflector movably mounted to be adjusted bodily to and from said film, said reflector being also mounted to be oscillated, a lens adjustably mounted relative to said reflector and to the film and means for oscillating said reflector in synchronism with the movement of said film, said means being capable of adjustment, whereby to regulate the oscillating movement of said reflector according to its distance from said film.

4. In a device of the character referred to, in combination, a film guide adjustably mounted, means for continuously driving a film along said film guide, a reflector mounted to be adjusted bodily to and from said film guide, said reflector being also adapted to be oscillated, a lens mounted to be adjusted relative to said reflector and to the film, and means for oscillating said reflector in synchronism with the movement of said film, said means being capable of adjustment, whereby to regulate the oscillating movement of said reflector according to its distance from said film.

5. In a device of the character referred to, in combination, a film guide, means for moving a film therealong continuously, a pair of lens elements adjustably mounted to be be moved bodily to and from said film guide, a reflector mounted to oscillate between said lens elements and movable bodily therewith in their adjustment to and from said film guide, and means for oscillating said reflector in synchronism with the movement of said film, said means being capable of adjustment, whereby to regulate the oscillating movement of said reflector according to its distance from said film.

6. In a device of the character referred to, in combination, a film guide, means for moving a film therealong continuously, a pair of bodily adjustable lens elements mounted at an angle to each other, one of said lens elements being adjusted relative to the other, a reflector mounted to oscillate between said lens elements and movable bodily therewith in their adjustment to and from said film guide, and means for oscillating said reflector in synchronism with the movement of said film, said means being capable of adjustment, whereby to regulate the oscillating movement of said reflector according to its distance from said film.

7. In a device of the character referred to, in combination, a film guide adjustably mounted, means for continuously driving a film along said film guide, a reflector mounted to be adjusted bodily to and from said film guide, said reflector being also adapted to be oscillated, a lens mounted to be adjusted relative to said reflector and to the film, and means for oscillating said reflector in synchronism with the movement of said film, said means comprising an operating cam, and an operating lever extending from said reflector to said cam, said lever having an adjustable cam-engaging portion whereby to regulate the oscillating movement of said reflector according to its distance from said film guide.

8. In a device of the character referred to, in combintion, a film guide, means for moving a film therealong continuously, a

pair of bodily adjustable lens elements mounted to be adjusted bodily to and from said film guide, a reflector mounted to oscillate between said lens elements and movable bodily therewith in their adjustment to and from said film guide, and means for oscillating said reflector in synchronism with the movement of said film, said lever having an adjustable cam-engaging portion whereby to regulate the oscillating movement of said reflector according to its distance from said film guide.

9. In a device of the character referred to, in combination, a film guide, means for moving a film therealong continuously, a pair of lens elements adjustably mounted in relation to the film, and at an angle to each other, one of said lens elements being adjustable relative to the other, a reflector mounted to oscillate between said lens elements and movable bodily therewith in their adjustment to and from said film guide, and means for oscillating said reflector in synchronism with the movement of said film, said lever having an adjustable cam-engaging portion, whereby to regulate the oscillating movement of said reflector according to its distance from said film guide.

10. In a device of the character referred to, in combination with a picture film and means for continuously moving the same, a reflector adjustably mounted and provided with an indicating finger and dial for indicating its angular position of adjustment, a lens adjustable relative to said reflector and provided with an indicating finger and dial for indicating its position relative to the horizontal, means for changing the distance between said film and said lens, and means for oscillating said reflector, said means being adjustable whereby to change its movement of oscillation.

11. In a device of the character referred to, in combination with a picture film and means for continuously moving the same, a film guide adjustably mounted, a reflector mounted at an angle to said film guide, said reflector being adapted to be oscillated about its axes, means for oscillating said reflector, said means being adjustable whereby to change the angle and distance of oscillation of said reflector, and a lens adjustably mounted, whereby to be adjusted to different positions relative to said reflector, substantially as described.

12. In a device of the character referred to, in combination with a picture film and means for continuously moving the same, a film guide, a lens, a reflector, means for oscillating said reflector in synchronism with the movement of said film, said means being capable of adjustment, whereby to regulate the oscillating movement of said reflector according to its distance from said film, and means for changing the distance between said film guide and said lens and reflector.

Signed at Portland, in the county of Multnomah, and State of Oregon.

CHRISTIAN ANDERSEN.

Witnesses:

ADOLPH W. HARR,

ALTA M. DALTON.

1088

C. W. EBELING.

CONTROL MEANS FOR SOUND REPRODUCING MACHINES.

APPLICATION FILED FEB. 7, 1916. RENEWED DEC. 18, 1917.

1,255,143. Patented Feb. 5, 1918.

3 SHEETS—SHEET 1.

Fig. 1.

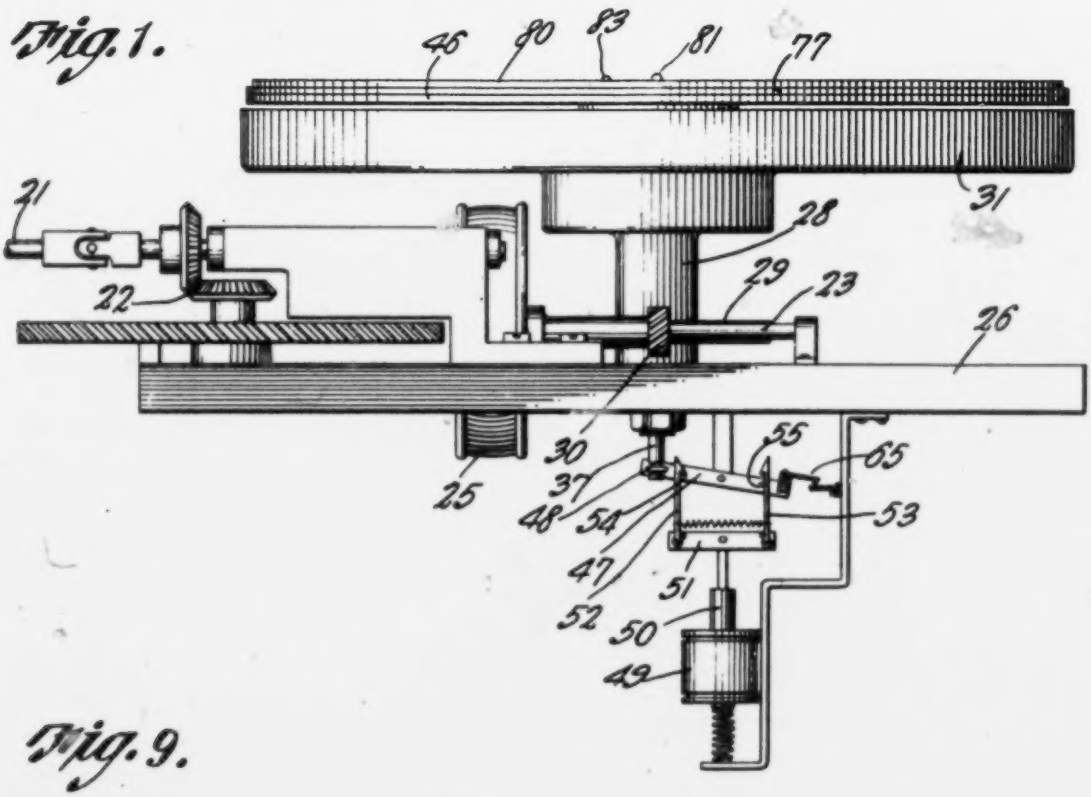

Fig. 9.

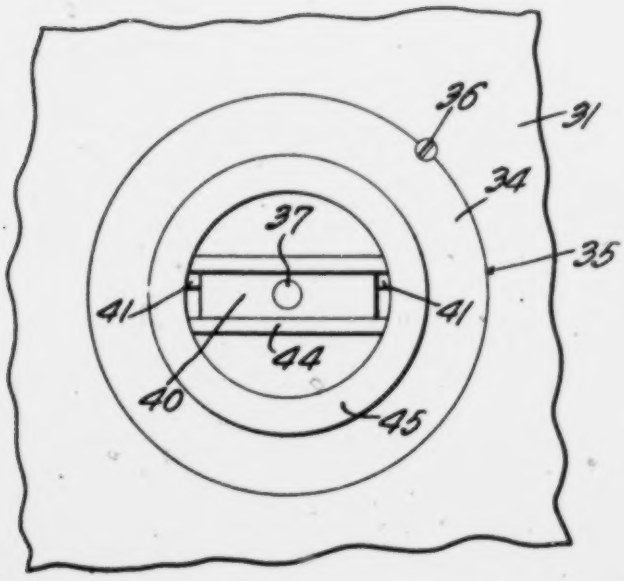

Fig. 10.

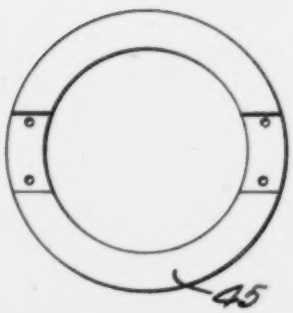

Inventor

Charles W. Ebeling

Witnesses

CONTROL MEANS FOR SOUND REPRODUCING MACHINES.

APPLICATION FILED FEB. 7, 1916. RENEWED DEC. 18, 1917.

1,255,143.

Patented Feb. 5, 1918.

3 SHEETS—SHEET 1.

Fig. 1.

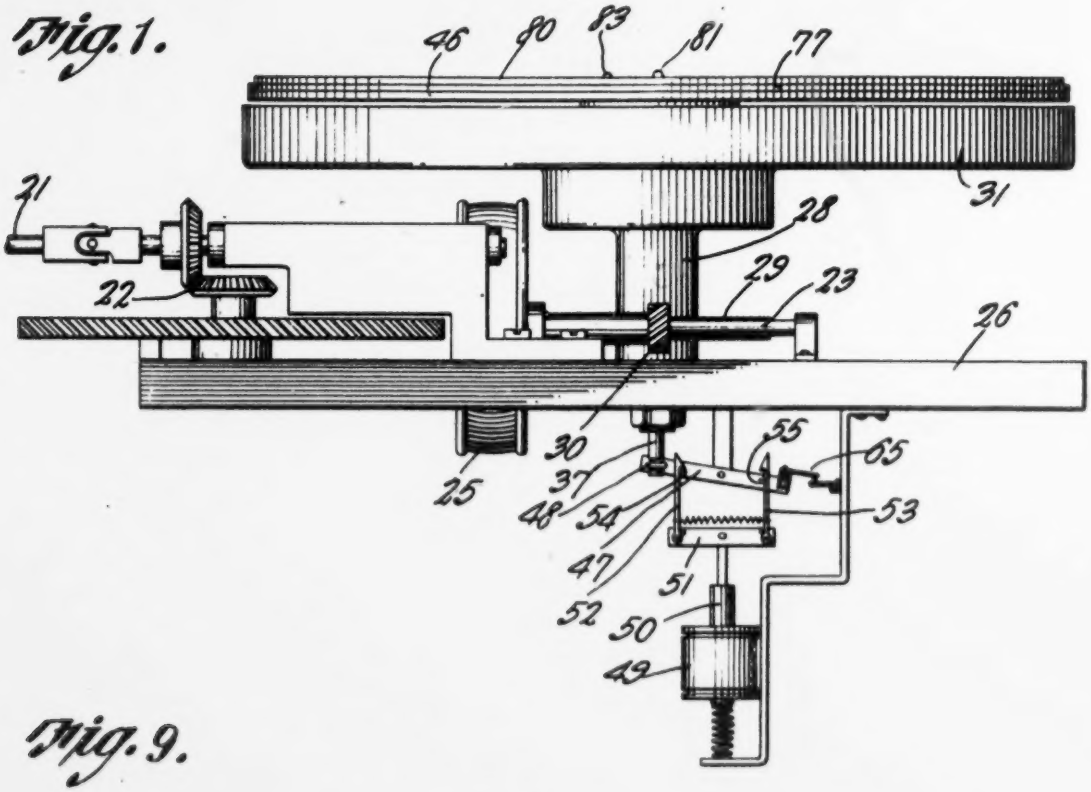

Fig. 9.

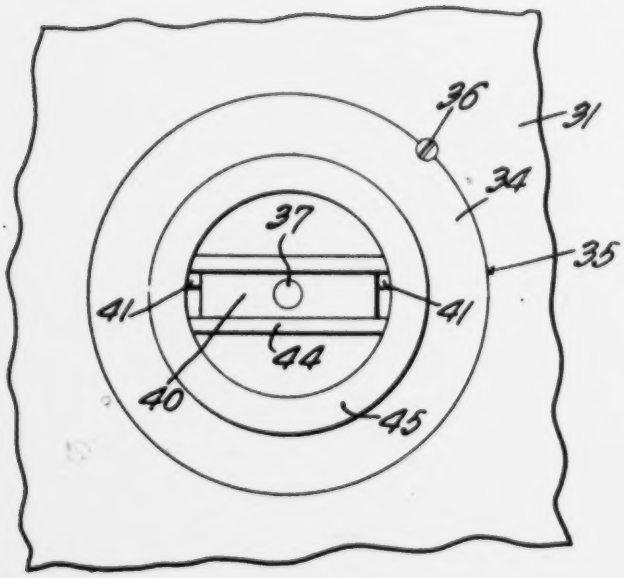

Fig. 10.

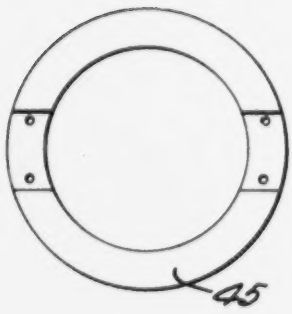

Inventor

Charles W. Ebeling

By Davis P. Moore

Attorney

Witnesses

Ed. R. Lusby

W. O. Roberts.

1090

C. W. EBELING.

CONTROL MEANS FOR SOUND REPRODUCING MACHINES.

APPLICATION FILED FEB. 7, 1916. RENEWED DEC. 18, 1917.

1,255,143. Patented Feb. 5, 1918.

3 SHEETS—SHEET 2.

Fig. 2.

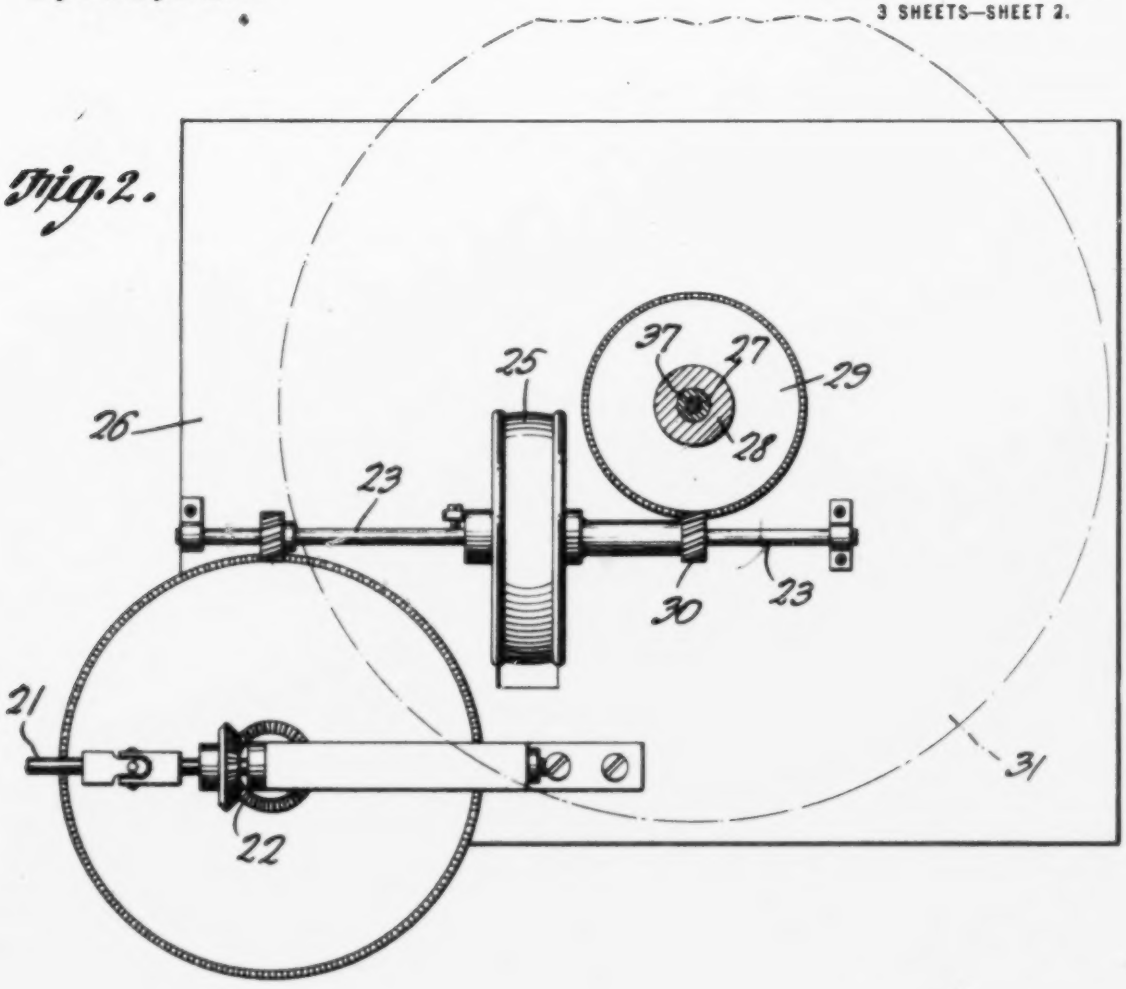

Fig. 5.

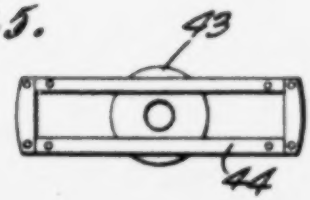

Fig. 6.

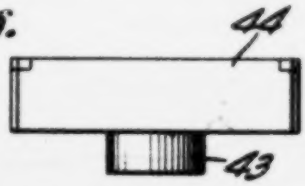

Fig. 7.

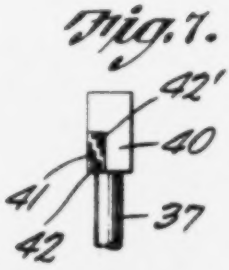

Inventor

Charles W. Ebeling

Witnesses

C. W. EBELING.

CONTROL MEANS FOR SOUND REPRODUCING MACHINES.

APPLICATION FILED FEB. 7, 1916. RENEWED DEC. 18, 1917.

1,255,143. Patented Feb. 5, 1918.

3 SHEETS—SHEET 2.

Fig. 2.

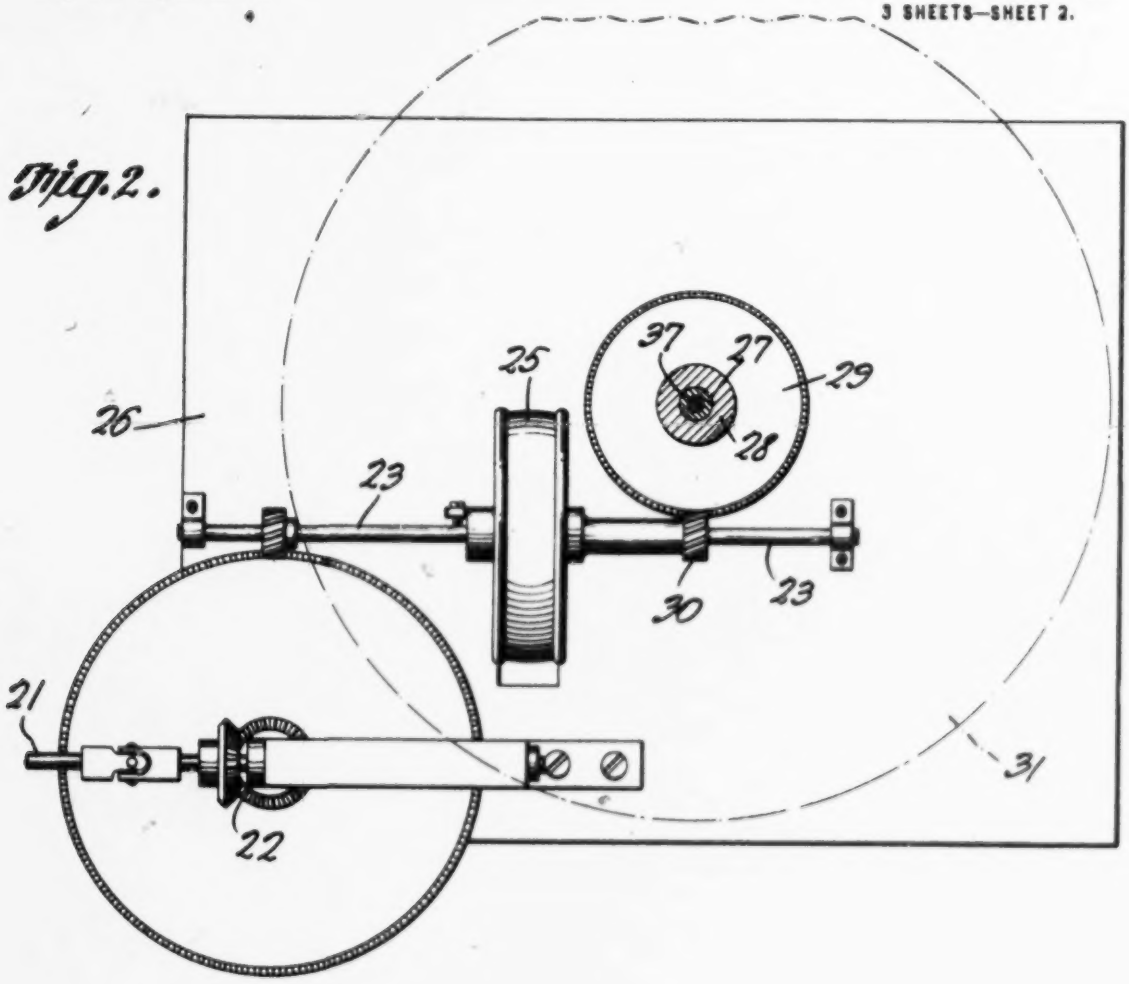

Fig. 5.

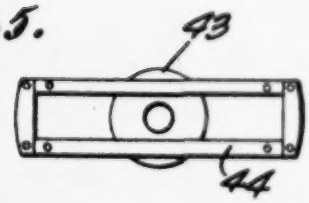

Fig. 6.

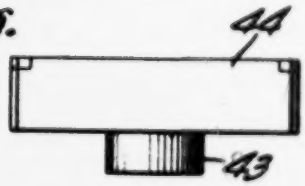

Fig. 7.

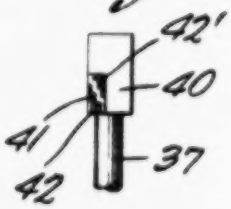

Witnesses

Ed. R. Lusby

W. Roberts.

Inventor

Charles W. Ebeling

By Daniel P. Moore

Attorney

1092

C. W. EBELING.

CONTROL MEANS FOR SOUND REPRODUCING MACHINES.

APPLICATION FILED FEB. 7, 1916. RENEWED DEC. 18, 1917.

1,255,143.

Patented Feb. 5, 1918.

3 SHEETS—SHEET 3.

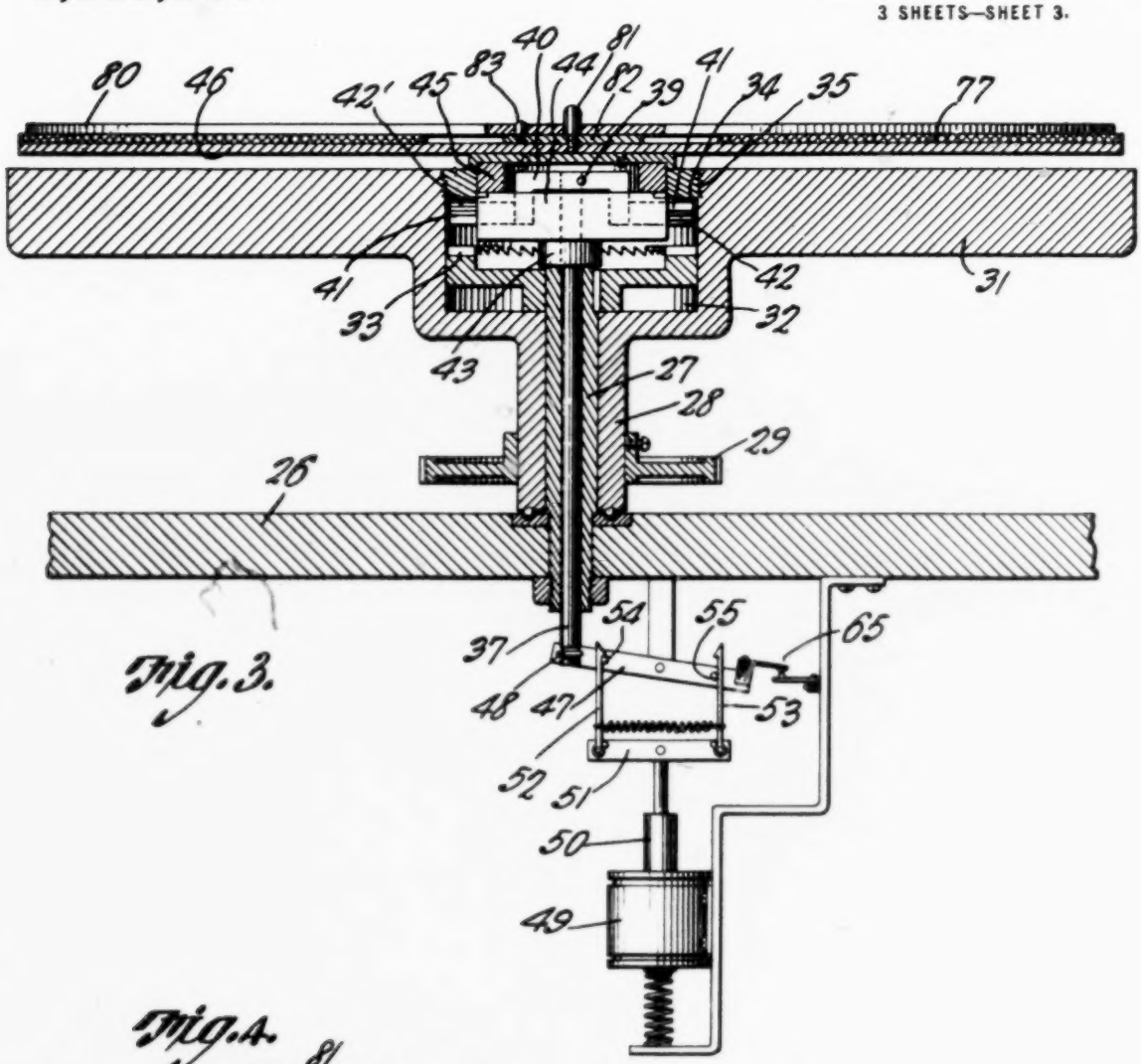

Fig. 3.

Fig. 4.

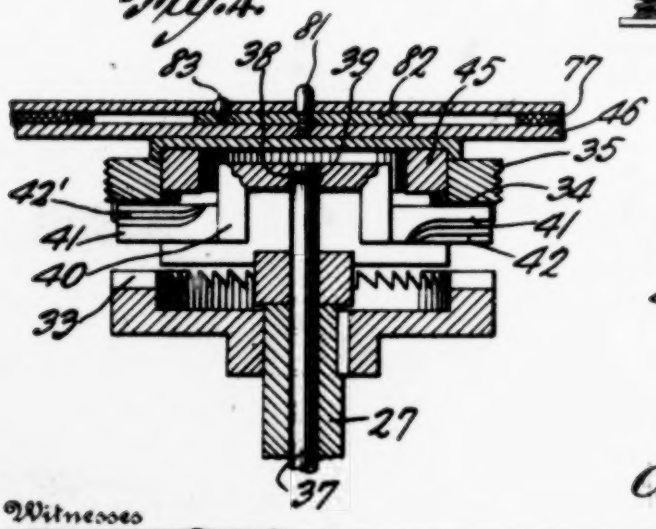

Fig. 8.

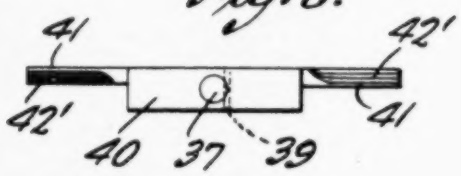

Witnesses

Inventor

Charles W. Ebeling

UNITED STATES PATENT OFFICE.

CHARLES W. EBELING, OF NEW YORK, N. Y.

CONTROL MEANS FOR SOUND-REPRODUCING MACHINES.

1,255,143. Specification of Letters Patent. Patented Feb. 5, 1918.

Application filed February 7, 1916, Serial No. 76,631. Renewed December 18, 1917. Serial No. 207,798.

To all whom it may concern:

Be it known that I, CHARLES W. EBELING, a citizen of the United States, residing at New York, in the county of New York and State of New York, have invented certain new and useful Improvements in Control Means for Sound-Reproducing Machines, of which the following is a specification, reference being had therein to the accompanying drawing.

In combining sound reproducing machines with motion picture mechanisms, there has been the inherent fault that the sound reproducing machine could not be started from an inert position to a full speed, and neither could such mechanism be brought to a stark standstill, to be started from such position again, and so on.

It is therefore the object of the present invention to produce a mechanism, that will start the sound reproducing mechanism from stark standstill to full or maximum speed, and without throwing any strain either upon the sound reproducing mechanism or the motion picture projecting mechanism.

To attain this object, I provide a continuously rotating momentum member, preferably a heavy disk, made in the form of a fly wheel, in combination with a record carrying member, which in turn is connected to and disconnected from the momentum member, so that it will be rotated with the momentum member from a standstill without affecting the speed of such member, it having been discovered that the sound record carried by the record carrying member can be halted in the middle of a word, and again started to continue and finish such word. The mechanism that forms the connecting link between the record carrying member and the momentum member, consists primarily of two opposed ratchets, one of which is carried by the rotating member and the other of which is stationary, in conjunction with a multiple pawl, which is provided with a plurality of oppositely disposed sets of ratchet engaging portions, whereby the ratchet will have one or more of its teeth engaged without any lost motion between the momentum and record carrying members. This feature makes it possible to stop and

tages fully appreciated, attention is invited to the accompanying drawings, in which:—

Figure 1 is a front elevation of the sound reproducing means.

Fig. 2 is a top plan view thereof, the momentum member being removed.

Fig. 3 is a vertical cross section through the momentum device and the adjacent parts including the tablet support.

Fig. 4 is an enlarged detail sectional view through the momentum member showing the connecting mechanism.

Figs. 5, 6, 7 and 8 are detail views of the pawl and its carrier.

Fig. 9 is a top plan view of the center of the momentum member.

Fig. 10 is a bottom plan view of the annulus carried upon the underside of the record carrying member.

Referring to the drawings, the numeral 21 designates a shaft which is preferably driven from the motion picture projector machine, not shown, to operate in turn through the transmission mechanism 22 the shaft 23, which is made in two sections, with the compensating spring 24 and its housing 25 forming the connection therebetween. A base 26 carries most of this mechanism, and also carries the fixed tubular upright shaft 27, upon which is journaled the sleeve 28, carrying the gear 29, which meshes with the gear 30 of the shaft 23. As the sleeve 28 is formed integral with the momentum member 31, this member is rotated from the motion picture projecting machine, and it is desirable that it be rotated all the time.

A circular chamber 32 is provided in the upper face of the member 31, and the upper end of the shaft 27 projects therein to receive the fixed lower annular ratchet 33, while fitted in the mouth of the chamber is the upper annular ratchet 34, which through the threads 35 and the lock screws 36 is fast to and rotates with the member 31.

Projecting through the shaft 27 and mounted for both longitudinal and rotary movements is a rod 37, the upper end of which is grooved at 38 to receive the locking pin 39, so that the block 40, may be secured thereto for rotary movement, but must move

CONTROL MEANS FOR SOUND REPRODUCING MACHINES.

APPLICATION FILED FEB. 7, 1916. RENEWED DEC. 18, 1917.

1,255,143.

Patented Feb. 5, 1918.

3 SHEETS—SHEET 3.

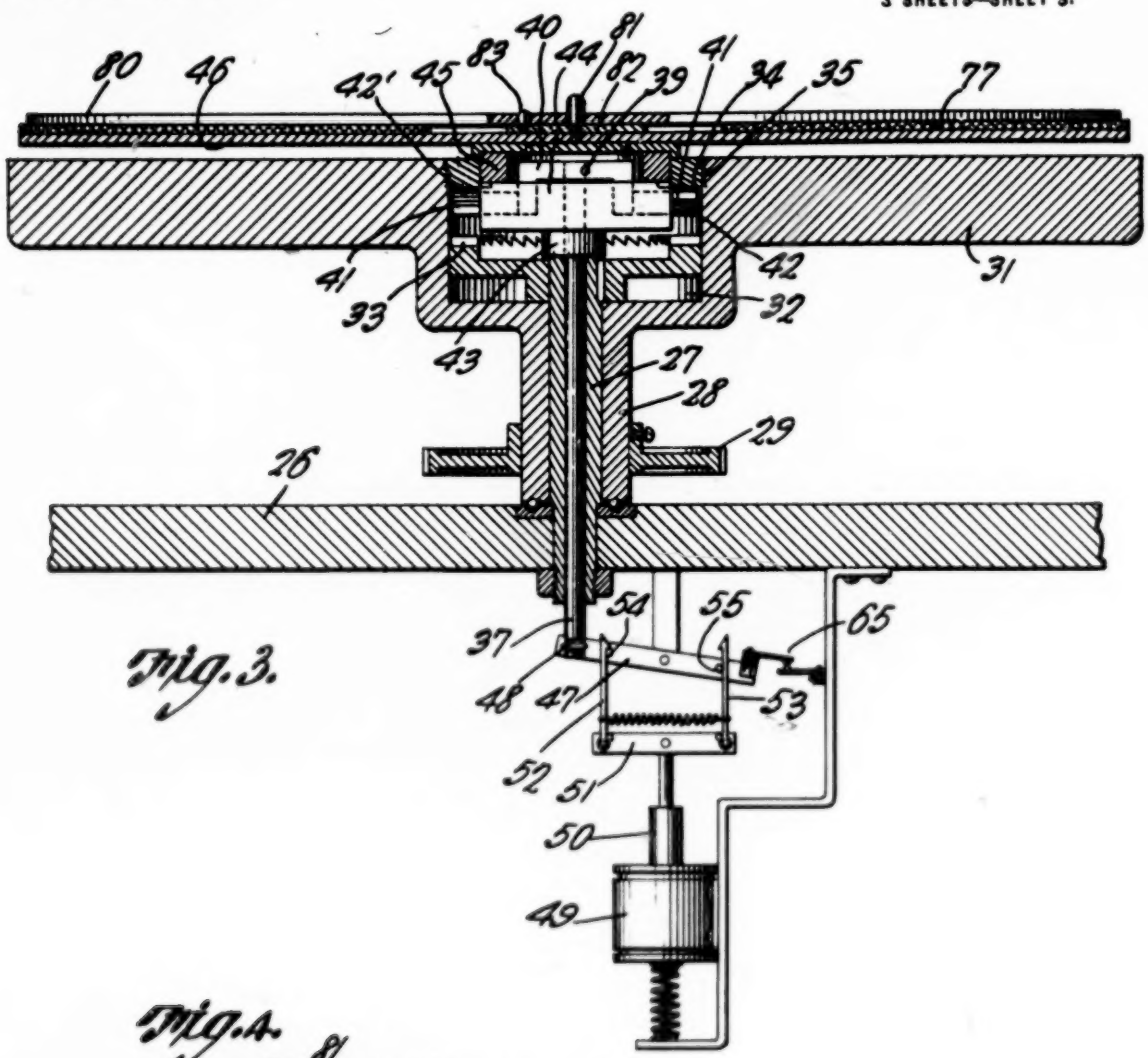

Fig. 3.

Fig. 4.

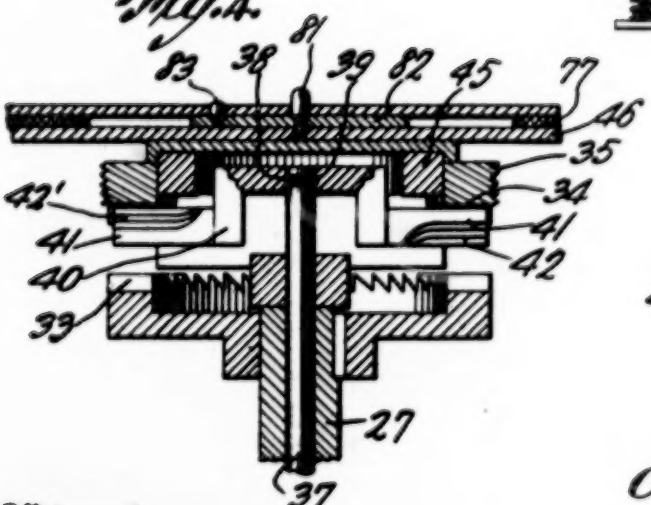

Fig. 8.

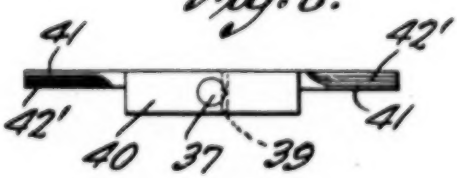

Witnesses

Ed. R. Lusby

F. W. Roberts

Inventor

Charles W. Ebeling

By Davis & Moore.

Attorneys

CHARLES W. EBELING, OF NEW YORK, N. Y.

CONTROL MEANS FOR SOUND-REPRODUCING MACHINES.

1,255,143. Specification of Letters Patent. Patented Feb. 5, 1918.

Application filed February 7, 1916, Serial No. 76,631. Renewed December 18, 1917. Serial No. 207,798.

To all whom it may concern:

Be it known that I, CHARLES W. EBELING, a citizen of the United States, residing at New York, in the county of New York and State of New York, have invented certain new and useful Improvements in Control Means for Sound-Reproducing Machines, of which the following is a specification, reference being had therein to the accompanying drawing.

In combining sound reproducing machines with motion picture mechanisms, there has been the inherent fault that the sound reproducing machine could not be started from an inert position to a full speed, and neither could such mechanism be brought to a stark standstill, to be started from such position again, and so on.

It is therefore the object of the present invention to produce a mechanism, that will start the sound reproducing mechanism from stark standstill to full or maximum speed, and without throwing any strain either upon the sound reproducing mechanism or the motion picture projecting mechanism.

To attain this object, I provide a continuously rotating momentum member, preferably a heavy disk, made in the form of a fly wheel, in combination with a record carrying member, which in turn is connected to and disconnected from the momentum member, so that it will be rotated with the momentum member from a standstill without affecting the speed of such member, it having been discovered that the sound record carried by the record carrying member can be halted in the middle of a word, and again started to continue and finish such word. The mechanism that forms the connecting link between the record carrying member and the momentum member, consists primarily of two opposed ratchets, one of which is carried by the rotating member and the other of which is stationary, in conjunction with a multiple pawl, which is provided with a plurality of oppositely disposed sets of ratchet engaging portions, whereby the ratchet will have one or more of its teeth engaged without any lost motion between the momentum and record carrying members. This feature makes it possible to stop and start the record with much precision and accuracy.

In order that the invention may be more fully understood and its numerous advantages fully appreciated, attention is invited to the accompanying drawings, in which:—

Figure 1 is a front elevation of the sound reproducing means.

Fig. 2 is a top plan view thereof, the momentum member being removed.

Fig. 3 is a vertical cross section through the momentum device and the adjacent parts including the tablet support.

Fig. 4 is an enlarged detail sectional view through the momentum member showing the connecting mechanism.

Figs. 5, 6, 7 and 8 are detail views of the pawl and its carrier.

Fig. 9 is a top plan view of the center of the momentum member.

Fig. 10 is a bottom plan view of the annulus carried upon the underside of the record carrying member.

Referring to the drawings, the numeral 21 designates a shaft which is preferably driven from the motion picture projector machine, not shown, to operate in turn through the transmission mechanism 22 the shaft 23, which is made in two sections, with the compensating spring 24 and its housing 25 forming the connection therebetween. A base 26 carries most of this mechanism, and also carries the fixed tubular upright shaft 27, upon which is journaled the sleeve 28, carrying the gear 29, which meshes with the gear 30 of the shaft 23. As the sleeve 28 is formed integral with the momentum member 31, this member is rotated from the motion picture projecting machine, and it is desirable that it be rotated all the time.

A circular chamber 32 is provided in the upper face of the member 31, and the upper end of the shaft 27 projects therein to receive the fixed lower annular ratchet 33, while fitted in the mouth of the chamber is the upper annular ratchet 34, which through the threads 35 and the lock screws 36 is fast to and rotates with the member 31.

Projecting through the shaft 27 and mounted for both longitudinal and rotary movements is a rod 37, the upper end of which is grooved at 38 to receive the locking pin 39, so that the block 40, may be secured thereto for rotary movement, but must move longitudinally with the rod. Carried by this block and extending in opposite directions are the two pawls 41, each one of which is provided with the two oppositely disposed series of teeth engaging projections or

steps 42 and 42′, the steps 42 being disposed to engage the teeth of the fixed ratchet 33, while the steps 42′ are to engage the teeth of the other ratchet 34, only one ratchtet being operated at a time.

The upper end of the rod 37 below the pawl carrying block is projected through the tubular boss 43 of the open frame 44, which in turn houses the block and also the major portion of the pawls, said frame being connected by screws or otherwise to the annulus 45 secured to the underside of the record disk or tablet carrying platform or member 46. Thus the platform or member 46 is always in position to be connected to or disconnected from the member 31. The elevating of the rod 37, moves the pawls into engagement with ratchet 34, and consequently connects the platform 46 with the member 31 through the frame 44, the block 40, the pawls 41 and the ratchet 34. The lowering of the rod 37 causes the pawls to disengage the ratchet 34 and to engage the fixed or stationary ratchet 33, thus halting the block 40, the frame 44 and the platform 46.

As each pawl is provided with the peculiarly formed ratchet teeth engaging ends, each step of which constitutes a tooth engager, it requires a very slight movement of the momentum device to cause the engagement with its ratchet 34 or the ratchet 33, to connect and disconnect the platform 46, without any perceptible lost motion. This special pawl was designed after considerable testing, and was found to accomplish the result desired.

Several mechanisms for imparting the desired longitudinal movement to the rod 37, to control, the operation of the block 40 and the pawls from the motion picture projecting machine, and thus produce the desired synchronism between the two mechanisms when "talking" or "singing" moving pictures are being produced, or where it is desired to introduce verbal explanations of the pictures being projected, as for instance inserts used in the films, may be employed.

One form is here illustrated, and comprises a rocking arm or lever 47, mounted below the base, and operably connected as at 48 to the lower end of the rod 37. The solenoid 49 has its core 50 operably connected to the arm 51, which in turn carries the two pivoted pawls 52 and 53, whose hooked terminals coöperate with the pins 54 and 55, of the arm or lever 47, so that the arm or lever may be rocked and held in such selected position, and thus impart the desired movement to the rod 37 and the pawls, so that the platform 46 will be held inert or connected for rotation with the member 31. deemed necessary to show in the present application.

As a telephone system is employed to convey the sound from the record tablet to various points in the auditorium a switch 65 is provided to open and close said circuit at the proper time, the circuit being open when the tablet is inert and closed when the tablet is revolved.

The upper surface of the platform 46 is covered with the usual sheet 77 of soft material to receive the sound record or tablet 80. The centering pin 81 is carried by the platform which has the center disk 82 held thereto by the pin 81 and also the other pin 83, which coöperates in holding the tablet 80 upon the platform 46. This arrangement of pins also assist in placing the record tablet for proper positioning in starting the same, in connection with the phonic groove of the record and the stylus of the transmitter.

What I claim as new is:—

1. In an apparatus of the character described, a continuously rotating driven member having a recess in one face thereof, and also having a clutch member, a stationary locking clutch member mounted in said recess, a driven member, and slidable means connected to the driven member and adapted to be engaged with either one of the clutch members, whereby the driven member is rotated with the driving member or held stationary.

2. In an apparatus of this character, the combination of a support, a continuously rotating member mounted thereon, a slidable member disposed axially of the rotating member, an engaging member carried thereby, a sound record support operably connected to the engaging member, two independent means, one carried by the rotating member and one stationary whereby when one means is engaged by the engaging member the record support is rotated by the rotating member and when the other means is engaged the record support is held stationary, and means for actuating the slidable member to select the position of the engaging member.

3. In an apparatus of this character, the combination of a support, a continuously rotating disk mounted thereon, a rod mounted axially of and for longitudinal sliding movement through the disk, a pawl carried by the rod, a sound record support operably connected to the pawl, two independent means one rotatable with and the other stationary relatively to the disk, whereby when one means is engaged by the engaging member the record support is rotated by the rotating member and when the other means is engaged the record support is held station-

combination of a support, a continuously rotating disk mounted thereon, a rod mounted axially of and for longitudinal sliding movement relatively to the disk, a pawl carried by the rod, a sound record support operably connected to the pawl, two oppositely disposed ratchets, one carried by the disk and the other stationary, said pawl being disposed for movement between the ratchets, and means for sliding the rod to connect the pawl with the ratchets, whereby the sound record tablet support is connected or disconnected relatively to the rotating disk.

5. In an apparatus of this character, the combination of a support, a continuously rotating disk mounted thereon, a rod mounted axially of and for longitudinal sliding movement relatively to the disk, a member connected to the rod and extending diametrically of the disk, said member being provided upon each end with two series of oppositely acting teeth, two rings, one of which is stationary and the other of which is fast to the disk, the opposed faces of said rings being toothed for coöperation with the teeth of the rod carried member, means for sliding the rod to cause either toothed ring to be engaged by the rod carried member, and a sound record tablet support connected to the rod carried member, whereby the latter is connected to or disconnected from the rotating disk.

6. In an apparatus of this character, the combination of a support, a continuously rotating disk having a concentric chamber, said disk being mounted upon the support, two rings, one made fast to the support and the other carried by the disk, both of said rings being within the chamber and the opposed faces of such rings being clutch faces, a sound record tablet support, a sliding rod mounted in the first support and connected to the record tablet support, a clutch member carried by the rod for engagement with one of the rings at a time, and means for sliding the rod to cause the clutch member to engage either ring at a time and thereby connect or disconnect the tablet support relatively to the rotating disk.

7. In an apparatus of this character, the combination of a support, a continuously rotating disk carried thereby, two rings one made fast to the support and the other carried by the disk, the opposed faces of such rings being clutch faces, a sound record tablet support, a frame carried by the tablet support, a clutch member mounted in said frame for sliding movement, a sliding rod mounted in the first support and connected to said clutch member, and means for sliding the rod to actuate said clutch member

rotating disk mounted thereon and having a concentric chamber open through the top, two rings, one made fast to the support and the other carried by the disk, both of said rings being within the chamber and the opposed faces of such rings being provided with teeth, a sound record tablet support, a sliding rod mounted in the first support and operably connected to the tablet support, a pawl connected to said rod for engaging the teeth of the respective rings, and means for sliding the rod to actuate the pawl.

9. In an apparatus of this character, the combination of a support, a continuously rotating disk mounted thereon, and having a concentric chamber open through the top, two rings, one made fast to the support and the other carried by the disk, both of said rings being within the concentric chamber and the opposed faces of such rings being provided with teeth, a sound record tablet support, a frame carried by the tablet support and projecting into said chamber, a pawl mounted in said frame for sliding movement, a sliding rod mounted in the first support and connected to said pawl, and means for sliding the rod to move the pawl into engagement with either one of the rings at a time.

10. In an apparatus of this character, the combination of a support, a continuously rotating disk mounted upon the support and having a chamber therein, two rings, one connected to the disk within the chamber and the other connected to the support and also in the chamber, the later being stationary, the opposed faces of the rings being provided with teeth, a sound record tablet support, a rod slidably mounted in the first support and operably connected to the tablet support, means carried by the rod for engaging the teeth of one of the rings at a time, and means for actuating the rod.

11. In an apparatus of this character, the combination of a support, a continuously rotating disk having a concentric chamber therein, two rings, one connected to the disk within the chamber and the other connected to the support within the chamber, the latter being stationary, the opposed faces of the rings being provided with teeth, a sound record tablet support, a frame carried by the tablet support, a pawl mounted in the frame and having its terminals disposed to engage the teeth of the rings, a rod slidably mounted in the first support and connected to the pawl, and means for actuating the rod to cause the pawl to engage one of the rings at a time.

12. A sound reproducing

while the steps 42' are to engage the teeth of the other ratchet 34, only one ratchtet being operated at a time.

The upper end of the rod 37 below the pawl carrying block is projected through the tubular boss 43 of the open frame 44, which in turn houses the block and also the major portion of the pawls, said frame being connected by screws or otherwise to the annulus 45 secured to the underside of the record disk or tablet carrying platform or member 46. Thus the platform or member 46 is always in position to be connected to or disconnected from the member 31. The elevating of the rod 37, moves the pawls into engagement with ratchet 34, and consequently connects the platform 46 with the member 31 through the frame 44, the block 40, the pawls 41 and the ratchet 34. The lowering of the rod 37 causes the pawls to disengage the ratchet 34 and to engage the fixed or stationary ratchet 33, thus halting the block 40, the frame 44 and the platform 46.

As each pawl is provided with the peculiarly formed ratchet teeth engaging ends, each step of which constitutes a tooth engager, it requires a very slight movement of the momentum device to cause the engagement with its ratchet 34 or the ratchet 33, to connect and disconnect the platform 46, without any perceptible lost motion. This special pawl was designed after considerable testing, and was found to accomplish the result desired.

Several mechanisms for imparting the desired longitudinal movement to the rod 37, to control, the operation of the block 40 and the pawls from the motion picture projecting machine, and thus produce the desired synchronism between the two mechanisms when "talking" or "singing" moving pictures are being produced, or where it is desired to introduce verbal explanations of the pictures being projected, as for instance inserts used in the films, may be employed.

One form is here illustrated, and comprises a rocking arm or lever 47, mounted below the base, and operably connected as at 48 to the lower end of the rod 37. The solenoid 49 has its core 50 operably connected to the arm 51, which in turn carries the two pivoted pawls 52 and 53, whose hooked terminals coöperate with the pins 54 and 55, of the arm or lever 47, so that the arm or lever may be rocked and held in such selected position, and thus impart the desired movement to the rod 37 and the pawls, so that the platform 46 will be held inert or connected for rotation with the member 31.

The solenoid 49 is controlled from the film in any desired manner, the detail arrangement and construction of which it is not

As a telephone system is employed to convey the sound from the record tablet to various points in the auditorium a switch 65 is provided to open and close said circuit at the proper time, the circuit being open when the tablet is inert and closed when the tablet is revolved.

The upper surface of the platform 46 is covered with the usual sheet 77 of soft material to receive the sound record or tablet 80. The centering pin 81 is carried by the platform which has the center disk 82 held thereto by the pin 81 and also the other pin 83, which coöperates in holding the tablet 80 upon the platform 46. This arrangement of pins also assist in placing the record tablet for proper positioning in starting the same, in connection with the phonic groove of the record and the stylus of the transmitter.

What I claim as new is:—

1. In an apparatus of the character described, a continuously rotating driven member having a recess in one face thereof, and also having a clutch member, a stationary locking clutch member mounted in said recess, a driven member, and slidable means connected to the driven member and adapted to be engaged with either one of the clutch members, whereby the driven member is rotated with the driving member or held stationary.

2. In an apparatus of this character, the combination of a support, a continuously rotating member mounted thereon, a slidable member disposed axially of the rotating member, an engaging member carried thereby, a sound record support operably connected to the engaging member, two independent means, one carried by the rotating member and one stationary whereby when one means is engaged by the engaging member the record support is rotated by the rotating member and when the other means is engaged the record support is held stationary, and means for actuating the slidable member to select the position of the engaging member.

3. In an apparatus of this character, the combination of a support, a continuously rotating disk mounted thereon, a rod mounted axially of and for longitudinal sliding movement through the disk, a pawl carried by the rod, a sound record support operably connected to the pawl, two independent means one rotatable with and the other stationary relatively to the disk, whereby when one means is engaged by the engaging member the record support is rotated by the rotating member and when the other means is engaged the record support is held stationary, and means for actuating the rod.

4. In an apparatus of this character, the

combination of a support, a continuously rotating disk mounted thereon, a rod mounted axially of and for longitudinal sliding movement relatively to the disk, a pawl carried by the rod, a sound record support operably connected to the pawl, two oppositely disposed ratchets, one carried by the disk and the other stationary, said pawl being disposed for movement between the ratchets, and means for sliding the rod to connect the pawl with the ratchets, whereby the sound record tablet support is connected or disconnected relatively to the rotating disk.

5. In an apparatus of this character, the combination of a support, a continuously rotating disk mounted thereon, a rod mounted axially of and for longitudinal sliding movement relatively to the disk, a member connected to the rod and extending diametrically of the disk, said member being provided upon each end with two series of oppositely acting teeth, two rings, one of which is stationary and the other of which is fast to the disk, the opposed faces of said rings being toothed for coöperation with the teeth of the rod carried member, means for sliding the rod to cause either toothed ring to be engaged by the rod carried member, and a sound record tablet support connected to the rod carried member, whereby the latter is connected to or disconnected from the rotating disk.

6. In an apparatus of this character, the combination of a support, a continuously rotating disk having a concentric chamber, said disk being mounted upon the support, two rings, one made fast to the support and the other carried by the disk, both of said rings being within the chamber and the opposed faces of such rings being clutch faces, a sound record tablet support, a sliding rod mounted in the first support and connected to the record tablet support, a clutch member carried by the rod for engagement with one of the rings at a time, and means for sliding the rod to cause the clutch member to engage either ring at a time and thereby connect or disconnect the tablet support relatively to the rotating disk.

7. In an apparatus of this character, the combination of a support, a continuously rotating disk carried thereby, two rings one made fast to the support and the other carried by the disk, the opposed faces of such rings being clutch faces, a sound record tablet support, a frame carried by the tablet support, a clutch member mounted in said frame for sliding movement, a sliding rod mounted in the first support and connected to said clutch member, and means for sliding the rod to actuate said clutch member relatively to the rings.

8. In an apparatus of this character, the combination of a support, a continuously rotating disk mounted thereon and having a concentric chamber open through the top, two rings, one made fast to the support and the other carried by the disk, both of said rings being within the chamber and the opposed faces of such rings being provided with teeth, a sound record tablet support, a sliding rod mounted in the first support and operably connected to the tablet support, a pawl connected to said rod for engaging the teeth of the respective rings, and means for sliding the rod to actuate the pawl.

9. In an apparatus of this character, the combination of a support, a continuously rotating disk mounted thereon, and having a concentric chamber open through the top, two rings, one made fast to the support and the other carried by the disk, both of said rings being within the concentric chamber and the opposed faces of such rings being provided with teeth, a sound record tablet support, a frame carried by the tablet support and projecting into said chamber, a pawl mounted in said frame for sliding movement, a sliding rod mounted in the first support and connected to said pawl, and means for sliding the rod to move the pawl into engagement with either one of the rings at a time.

10. In an apparatus of this character, the combination of a support, a continuously rotating disk mounted upon the support and having a chamber therein, two rings, one connected to the disk within the chamber and the other connected to the support and also in the chamber, the later being stationary, the opposed faces of the rings being provided with teeth, a sound record tablet support, a rod slidably mounted in the first support and operably connected to the tablet support, means carried by the rod for engaging the teeth of one of the rings at a time, and means for actuating the rod.

11. In an apparatus of this character, the combination of a support, a continuously rotating disk having a concentric chamber therein, two rings, one connected to the disk within the chamber and the other connected to the support within the chamber, the latter being stationary, the opposed faces of the rings being provided with teeth, a sound record tablet support, a frame carried by the tablet support, a pawl mounted in the frame and having its terminals disposed to engage the teeth of the rings, a rod slidably mounted in the first support and connected to the pawl, and means for actuating the rod to cause the pawl to engage one of the rings at a time.

12. A sound reproducing mechanism, including a support, a tubular shaft carried thereby, a disk having a tubular portion and a concentric recess surrounding the tubular

shaft for rotation, driving means connected thereto, a pair of oppositely disposed transmission means mounted within the recess of the disk, one being connected to the disk and the other being fast to the tubular shaft, and selectively operated means mounted in the shaft and disposed within the recess for sliding movement, whereby either one of the transmission means is engaged at a time.

13. A sound reproducing mechanism, including a support, a tubular shaft carried thereby, a disk having a tubular portion and a concentric recess surrounding the tubular shaft for rotation, driving means connected thereto, a pair of oppositely disposed transmission means mounted within the recess of the disk, one being connected to the disk and the other being fast to the tubular shaft, selectively operated means mounted in the shaft and disposed within the recess for sliding movement, whereby either one of the transmission means is engaged at a time, a sound record platform disposed above the disk for independent rotation, and means connected thereto and to the selective means, whereby the platform is held inert or rotated with the disk.

14. A sound reproducing machine, including a support, a fixed tubular shaft carried thereby, a momentum disk having a central recess and a tubular portion, said tubular portion being mounted for rotation upon the shaft, driving means connected to the tubular portion, two oppositely disposed ratchet wheels mounted within the recess, one of said wheels being fast to the fixed shaft and the other being fast to the disk, a tablet support mounted above the disk, a connecting member attached to the tablet support and projected within the recess of the disk, a longitudinally movable and rotative shaft mounted in the tubular shaft and projecting above and below the same, and means mounted upon the upper end of said last shaft and operably connected to the attaching member of the tablet support for establishing connection with either one of the ratchet wheels, whereby the tablet support is held inert when engaging the fixed ratchet wheel or is rotated with the momentum disk when engaging the other ratchet wheel.

In testimony whereof I affix my signature.

CHARLES W. EBELING.

1098

F. L. TERWILLIGER.

MOTION PICTURE PROJECTING MACHINE.

APPLICATION FILED FEB. 7, 1917.

1,256,613. Patented Feb. 19, 1918.

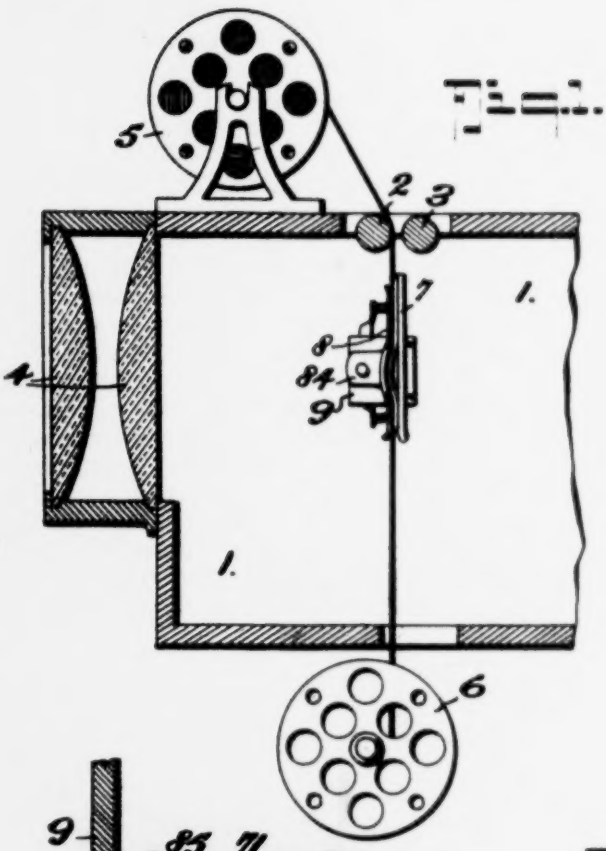

Fig. 1.

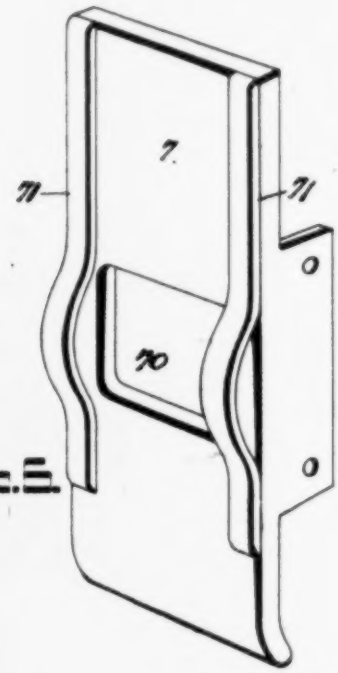

Fig. 6.

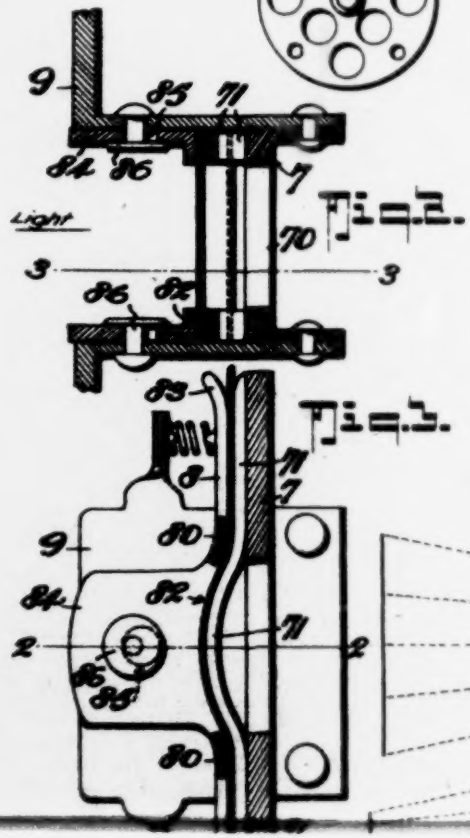

Fig. 2.

Fig. 3.

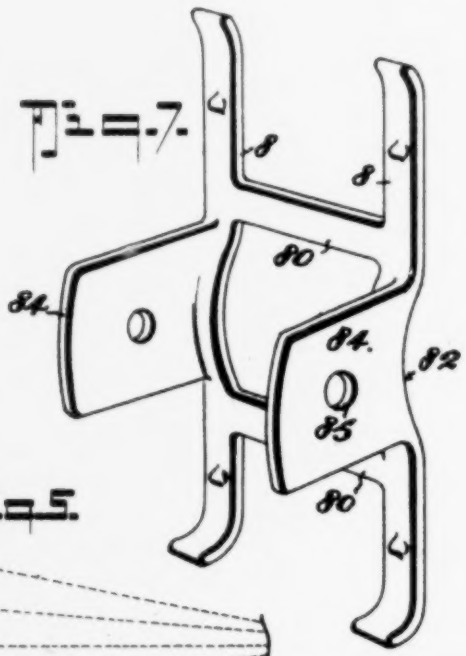

Fig. 7.

Fig. 5.

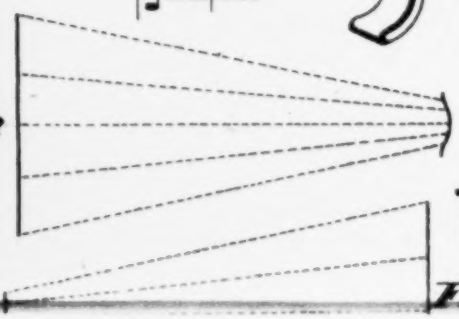

Fig. 4.

INVENTOR

F. L. Terwilliger.

UNITED STATES PATENT OFFICE.

FRANK L. TERWILLIGER, OF KLAMATH FALLS, OREGON, ASSIGNOR OF ONE-HALF TO THADDEUS G. McHATTAN, OF KLAMATH FALLS, OREGON.

MOTION-PICTURE-PROJECTING MACHINE.

1,256,613. Specification of Letters Patent. Patented Feb. 19, 1918.

Application filed February 7, 1917. Serial No. 147,083.

To all whom it may concern:

Be it known that I, FRANK L. TERWILLIGER, of Klamath Falls, in the county of Klamath and State of Oregon, have invented certain new and useful Improvements in Motion-Picture-Projecting Machines, of which the following is a specification.

This invention has reference to improvements in moving picture projecting apparatus and it more particularly has for its purpose to provide a simple, and inexpensive attachment for the conventional types of picture projecting apparatus, which, when operatively applied, tends to maintain a proper focusing of the film and in such manner that the projected picture is shown on the screen uniformly sharp from the center to the outer edges thereof.

As is well known to those skilled in the art to which this invention relates, when passing the film flatwise across the aperture in the plate through which the picture is projected, the distance lines or lines of focus from the opposite ends of the aperture to the screen are of greater length than the lines of focus from the center of the aperture to the screen, hence, resulting in sharper lines of the picture at the center of the screen than at its outer edges.

In order to properly focus the film and produce, as it were, a uniform sharpness of the picture upon the screen, I have provided an improved attachment applicable to the ordinary types of apertured projecting plates, for causing the film to present a convex contour the full width of the opening at the optical axis, whereby to render all distance lines projected from the film of uniform length and at the same time so guide the film that the danger of the curved portion of such film, warping or buckling, is prevented during the operation of passing the film over the projecting opening.

This invention also has for its purpose, to provide in an attachment of the character stated for moving picture machines, means for holding the film under a limited tension as it passes along over the projecting plate, to thereby maintain the said film in proper shape for assuming the convexed form and under relatively rigid condition when passing the projecting opening.

[illegible] combination of parts, all of which will be first described in detail, specifically pointed out in the claims and illustrated in the accompanying drawing, in which:

Figure 1 is a longitudinal section of so much of a moving picture apparatus as is necessary to illustrate a practical application of this invention.

Fig. 2 is a detail horizontal section thereof on the line 2—2 on Fig. 3.

Fig. 3 is a vertical section thereof taken on the line 3—3 on Fig. 2.

Fig. 4 is a diagram that illustrates the relative lengths of the distance lines of the picture projected through a film that passes flatwise across the opening.

Fig. 5 is a similar view that shows the distance lines as projected from a film shaped in accordance with this invention.

Fig. 6 is a detail perspective view of the apertured plate with my arrangement of film tracks.

Fig. 7 is a similar view of the tension device that coöperates with the said guides for holding the moving film from warping or buckling along its curved portion.

In the drawing, 1 designates a casing of a moving picture apparatus, 4 the condenser lenses, 5 the upper or film supply roll, 2—3 the film guide rolls, located above the apertured plate 7 over which the film passes and from which it extends down through the bottom of the casing to the take-up roll 6, the several parts so far described being shown to illustrate the practical application of this invention which will now be explained in detail, it being understood that any suitable means are included in the apparatus for advancing the film.

Referring now more particularly to Figs. 2, 3, 6 and 7, it will be noticed that the apertured plate 7 has the usual elongated aperture 70 and in my construction it has film tracks 71—71 along the opposite edges and such portions of the said tracks in transverse alinement with the aperture 70 are curved outwardly in the longitudinal plane of the tracks to form convexed surfaces relatively to the aperture 70, to provide a uniform backwardly curved or convexed film portion with respect to the said aperture 70, as is clearly shown in Fig. 5, by reference to [illegible]

APPLICATION FILED FEB. 7, 1917.

1,256,613.

Patented Feb. 19, 1918.

Fig. 1.

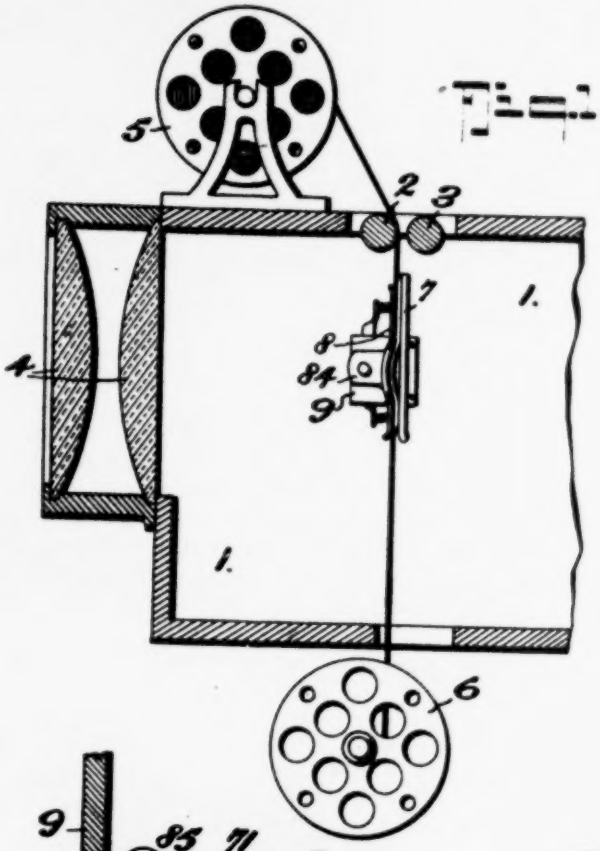

Fig. 6.

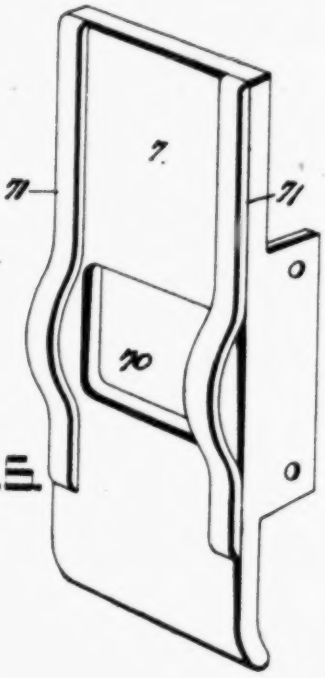

Fig. 2.

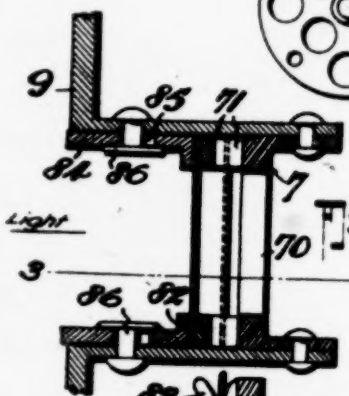

Fig. 3.

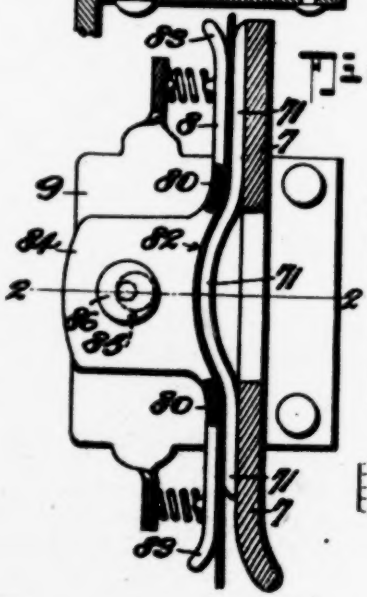

Fig. 7.

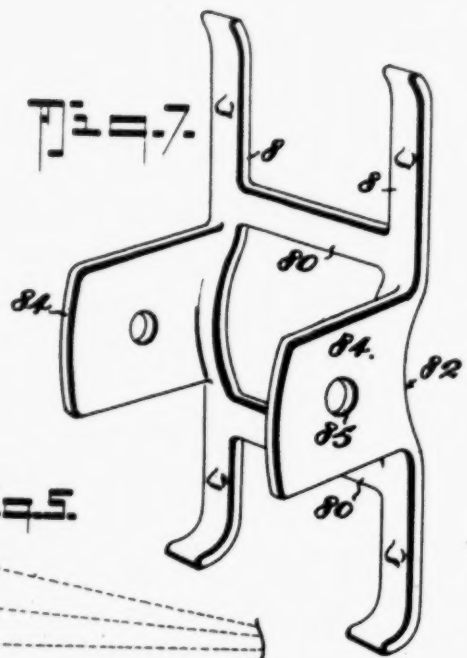

Fig. 5.

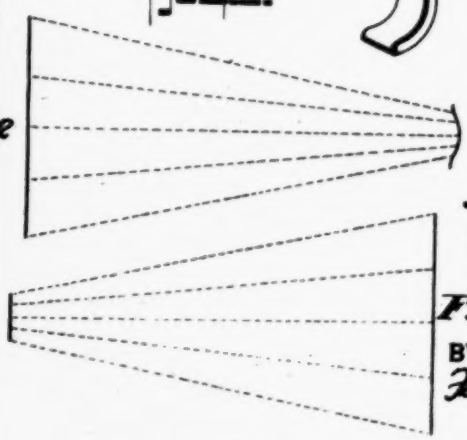

Fig. 4.

INVENTOR

F. L. Terwilliger.

BY

Fred G. Peterich & Co.

ATTORNEYS

FRANK L. TERWILLIGER, OF KLAMATH FALLS, OREGON, ASSIGNOR OF ONE-HALF TO THADDEUS G. McHATTAN, OF KLAMATH FALLS, OREGON.

MOTION-PICTURE-PROJECTING MACHINE.

1,256,613. Specification of Letters Patent. Patented Feb. 19, 1918.

Application filed February 7, 1917. Serial No. 147,083.

To all whom it may concern:

Be it known that I, FRANK L. TERWILLIGER, of Klamath Falls, in the county of Klamath and State of Oregon, have invented certain new and useful Improvements in Motion-Picture-Projecting Machines, of which the following is a specification.

This invention has reference to improvements in moving picture projecting apparatus and it more particularly has for its purpose to provide a simple, and inexpensive attachment for the conventional types of picture projecting apparatus, which, when operatively applied, tends to maintain a proper focusing of the film and in such manner that the projected picture is shown on the screen uniformly sharp from the center to the outer edges thereof.

As is well known to those skilled in the art to which this invention relates, when passing the film flatwise across the aperture in the plate through which the picture is projected, the distance lines or lines of focus from the opposite ends of the aperture to the screen are of greater length than the lines of focus from the center of the aperture to the screen, hence, resulting in sharper lines of the picture at the center of the screen than at its outer edges.

In order to properly focus the film and produce, as it were, a uniform sharpness of the picture upon the screen, I have provided an improved attachment applicable to the ordinary types of apertured projecting plates, for causing the film to present a convex contour the full width of the opening at the optical axis, whereby to render all distance lines projected from the film of uniform length and at the same time so guide the film that the danger of the curved portion of such film, warping or buckling, is prevented during the operation of passing the film over the projecting opening.

This invention also has for its purpose, to provide in an attachment of the character stated for moving picture machines, means for holding the film under a limited tension as it passes along over the projecting plate, to thereby maintain the said film in proper shape for assuming the convexed form and under relatively rigid condition when passing the projecting opening.

With other objects in view that will hereinafter appear, this invention embodies the peculiar features of construction and novel combination of parts, all of which will be first described in detail, specifically pointed out in the claims and illustrated in the accompanying drawing, in which:

Figure 1 is a longitudinal section of so much of a moving picture apparatus as is necessary to illustrate a practical application of this invention.

Fig. 2 is a detail horizontal section thereof on the line 2—2 on Fig. 3.

Fig. 3 is a vertical section thereof taken on the line 3—3 on Fig. 2.

Fig. 4 is a diagram that illustrates the relative lengths of the distance lines of the picture projected through a film that passes flatwise across the opening.

Fig. 5 is a similar view that shows the distance lines as projected from a film shaped in accordance with this invention.

Fig. 6 is a detail perspective view of the apertured plate with my arrangement of film tracks.

Fig. 7 is a similar view of the tension device that coöperates with the said guides for holding the moving film from warping or buckling along its curved portion.

In the drawing, 1 designates a casing of a moving picture apparatus, 4 the condenser lenses, 5 the upper or film supply roll, 2—3 the film guide rolls, located above the apertured plate 7 over which the film passes and from which it extends down through the bottom of the casing to the take-up roll 6, the several parts so far described being shown to illustrate the practical application of this invention which will now be explained in detail, it being understood that any suitable means are included in the apparatus for advancing the film.

Referring now more particularly to Figs. 2, 3, 6 and 7, it will be noticed that the apertured plate 7 has the usual elongated aperture 70 and in my construction it has film tracks 71—71 along the opposite edges and such portions of the said tracks in transverse alinement with the aperture 70 are curved outwardly in the longitudinal plane of the tracks to form convexed surfaces relatively to the aperture 70, to provide a uniform backwardly curved or convexed film portion with respect to the said aperture 70, as is clearly shown in Fig. 5, by reference to which it will be seen that by reason of drawing back the film on a uniform or convexed line, all of the light lines that are projected

onto the screen are of uniform length from the center to the opposite edges of the said screen and hence a uniform sharpness of the picture, across the screen at all points thereof is obtained.

It should be stated that in my means for projecting light lines of equal distances, the film is curved in the longitudinal plane to the line of movement of the film and maintains its relative flat face relation to the plate aperture over which it passes

To obtain the best results and keep the film in its uniform flat face relation and under such rigidity that side buckling or warping thereof, as it passes between the condenser and the apertured plate, is prevented, a spring tension device is provided for engaging the film under such conditions that it holds the film against warping or buckling and yet provides for the required free feeding or movement of the film, as it passes from the supply roll to the take-up devices.

For this purpose, I have provided a pressure frame that consists of opposite parallel side members 8 of resilient metal, which are held spaced apart by upper and lower cross members 80—80.

The side members 8 are so spaced as to close against the opposite film edges that move along the film tracks and, at the plate aperture, each member 8 is concaved, as at 82, to register with the convexed portions of the said track, and to provide against possible injury to the film edges, the upper and lower ends of the members 8 are gradually curved outwardly, as at 83.

The said pressure frame, formed of resilient metal, is rockably mounted upon a suitable support 9, the said frame having rearwardly projected ears 84—84 that are fulcrumed, as at 85, on studs 86, held in alinement with the central horizontal axis of the opening 70.

By reason of providing a spring tension device for holding the film against buckling or warping, as stated, the said device, while at all times operating to keep the film perfectly smooth, free of warps or irregular face surfaces, accommodates itself to intermittent interruptions of the film movement and irregular longitudinal strains on the film, as it feeds from the supply roll.

My invention is exceedingly simple in its construction and is of such a character that it may be readily applied to the conventional types of moving picture apparatus without the necessity of any material changes therein.

What I claim is:

1. In an apparatus for moving pictures; means for presenting the film in a uniform convexed surface at the optical axis and in a longitudinal plane to the movement of the said film, and means for holding the film against buckling or warping at such convexed surface, said means consisting of a resilient rockable frame adapted for being held in engagement with the opposite or track edges of the film.

2. In an apparatus for moving pictures; means for presenting the film in a uniform convexed surface at the optical axis and in a longitudinal plane to the movement of the said film, and means for holding the film against buckling or warping at such convexed surface, the said means consisting of a resilient frame adapted for being held in engagement with the opposite or track edges of the film, the said resilient frame being mounted to rock in the direction of its length and fulcrumed in alinement with the central horizontal axis of the opening in the projecting plate.

3. As a new article, a picture projecting means comprising an apertured plate having film tracks along its opposite edges, the said tracks including convexed portions in transverse alinement with the aperture in the plate and in a longitudinal plane to the line of movement of the film and a flexible tension device for holding the opposite edges of the film against the film tracks under tension.

FRANK L. TERWILLIGER.

1102

C. W. EBELING.

COMPENSATING DEVICE FOR HAND OPERATED MOTION PICTURE PROJECTORS AND THE LIKE.

APPLICATION FILED NOV. 18, 1916. RENEWED JAN. 19, 1918.

1,261,797.

Patented Apr. 9, 1918.

3 SHEETS—SHEET 1.

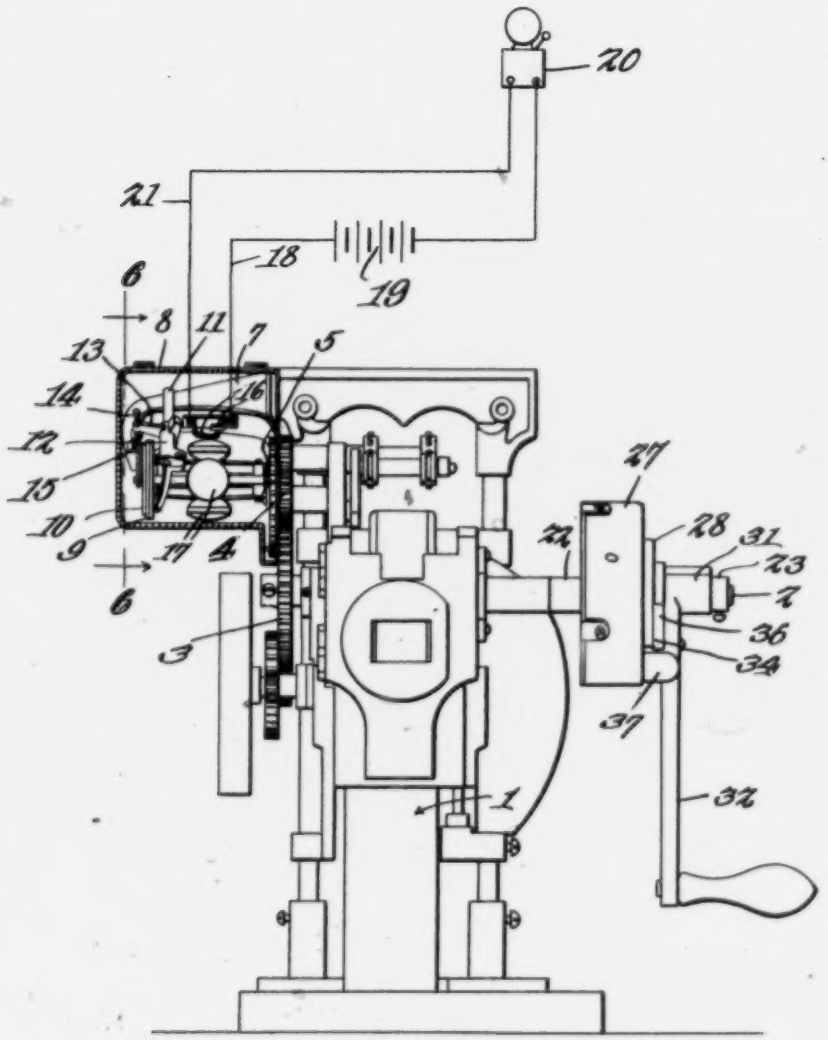

Fig. 1.

Charles W. Ebeling

Witnesses

J. R. Toulin

R. L. Parker

Inventor,

by C. A. Snow & Co.

Attorneys.

1104

C. W. EBELING.

COMPENSATING DEVICE FOR HAND OPERATED MOTION PICTURE PROJECTORS AND THE LIKE.

APPLICATION FILED NOV. 18, 1916. RENEWED JAN. 19, 1918.

1,261,797.

Patented Apr. 9, 1918.

3 SHEETS—SHEET 2.

Fig. 2.

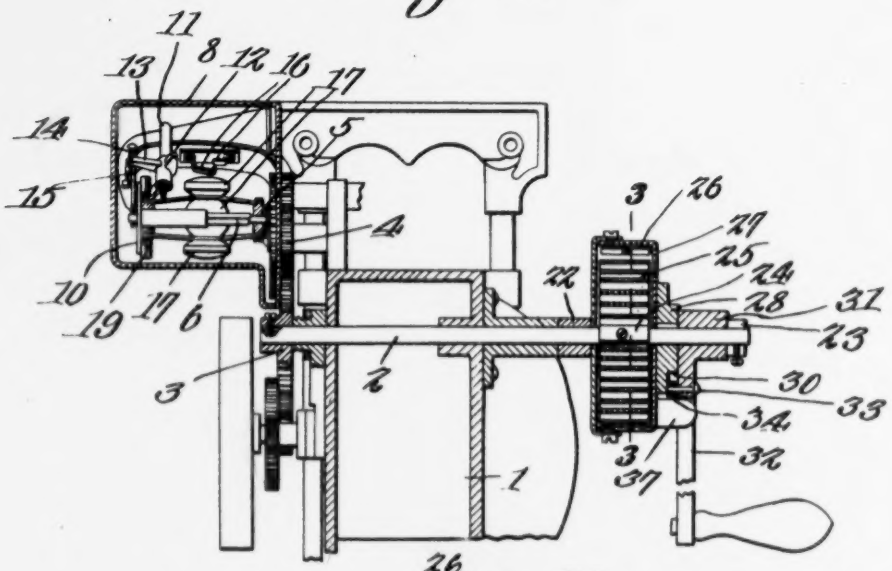

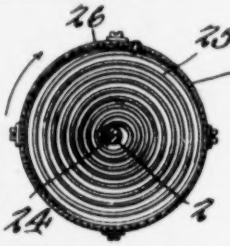

Fig. 3.

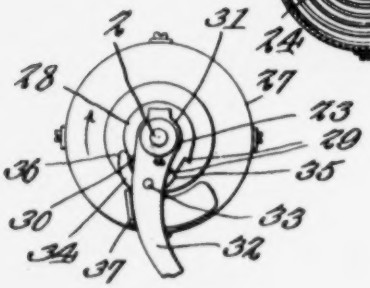

Fig. 4.

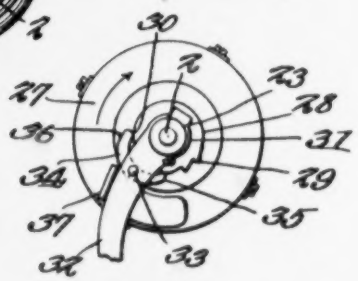

Fig. 5.

Charles W. Ebeling

Witnesses

J. R. Toner

R. L. Parker

Inventor,

by C. A. Snow & Co.

Attorneys.

1106

C. W. EBELING.

COMPENSATING DEVICE FOR HAND OPERATED MOTION PICTURE PROJECTORS AND THE LIKE.

APPLICATION FILED NOV. 18, 1916. RENEWED JAN. 19, 1918.

1,261,797.

Patented Apr. 9, 1918.

3 SHEETS—SHEET 3.

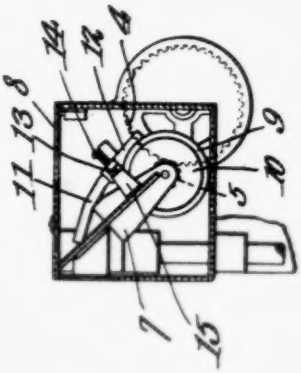

Fig. 6.

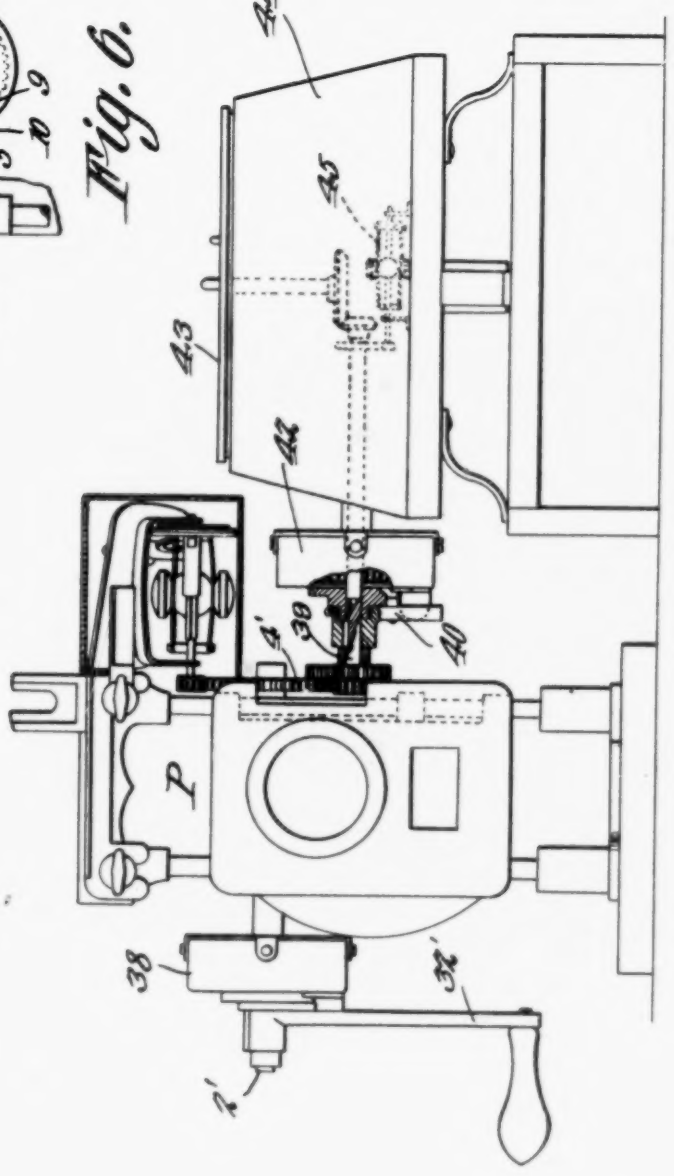

Fig. 7.

Charles W. Ebeling

Witnesses

Inventor,

UNITED STATES PATENT OFFICE.

CHARLES W. EBELING, OF NEW YORK, N Y

COMPENSATING DEVICE FOR HAND-OPERATED MOTION-PICTURE PROJECTORS AND THE LIKE.

1,261,797. Specification of Letters Patent. Patented Apr. 9, 1918.

Application filed November 18, 1916, Serial No. 132,122. Renewed January 19, 1918. Serial No. 212,837.

To all whom it may concern:

Be it known that I, CHARLES W. EBELING, a citizen of the United States, residing at New York, in the county and State of New York, have invented a new and useful Compensating Device for Hand-Operated Motion-Picture Projectors and the like, of which the following is a specification.

The present invention relates to improvements in compensating devices for hand operated motion-picture projectors and the like, one object of the present invention being the provision of means adapted to be connected to the projector when used alone and to the projector and a sound record carrier when coupled together, whereby the record of one or the records of both machines cannot be speeded regardless of the power exerted by the operator upon the crank, and also whereby an unsteady or intermittent actuation of the crank will be received in a power storing means and distributed to the record or records at a uniform rate, there being interposed between the crank and the operating shaft, a connection, which under normal conditions forms a connecting medium so that the train of gears of the projector is properly operated to feed the film at a desired speed, but when acted upon to speed the film, will permit of a certain movement of the crank without accelerating the speed of the train of gears and thus prevent the moving of the film beyond a predetermined speed.

A further object of the present invention is the provision of a governor actuated brake device operably connected to the motor mechanism of the projector, which determines the speed at which the film is to move and which if the operator attempts to speed the machine will maintain the film moving, at such predetermined speed, and to a certain extent lock the operating shaft so that the crank will move independently, to a certain degree, of the operating shaft without adding to or accelerating the movement of the film.

A still further object of the invention is the provision of means, that makes it necessary for the operator to crank the machine during the full projection operation, the only [illegible] that the operator of the projector mechanism cannot at any time tamper with the same.

In many localities it is now prohibited to use an electric motor for operating the projector, mainly for the reason that the operator becomes careless, and leaves the machine, so that should the film at any time break, there is a liability of starting fires due to the lamp heat upon the stationary film. Therefore in such localities a crank actuated projector mechanism is the only one permitted by law. In the cases where the crank is connected to the motor mechanism of the projector, in many instances the operator, especially toward the end of the performance, will speed the machine, and thus in many cases tear or break the film due to the undue strain thrown thereupon, and in any event will cause the rapid production of the images upon the screen so that the desired effect in the production thereof is not attained, and in many instances, the public displeased. The present form of device, necessitates only the attachment of a governor actuated brake device to the train of gears of the projector, and the displacement of the ordinary crank with the present crank attachment including a resilient spring connection between the crank and the main shaft, so positioned that the normal tension thrown upon the main shaft will tend to wind the spring thereof, such spring being of such stiffness as under normal conditions to form a direct connection between the crank and the shaft so that the train of gears and the film may be operated without any undue strain, similarly to the simple direct connected crank of the present machine. Should, however, the operator intentionally or otherwise force the crank to speed the mechanism, the spring will be wound and thus permit the movement of the crank without unduly affecting the main shaft of the machine, and without speeding the film, the governor being actuated to operate the brake and thus maintain the speed of the film regardless of whether the crank is operated with a steady pressure or with an intermittent pressure. With the present device it has been found even when the

APPLICATION FILED NOV. 18, 1916. RENEWED JAN. 19, 1918.

1,261,797.

Patented Apr. 9, 1918.

3 SHEETS—SHEET 3.

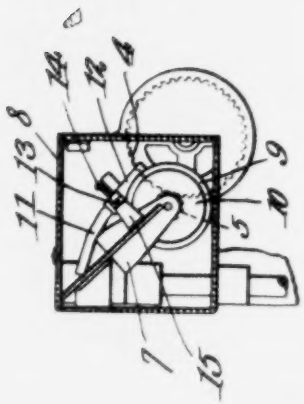

Fig. 6.

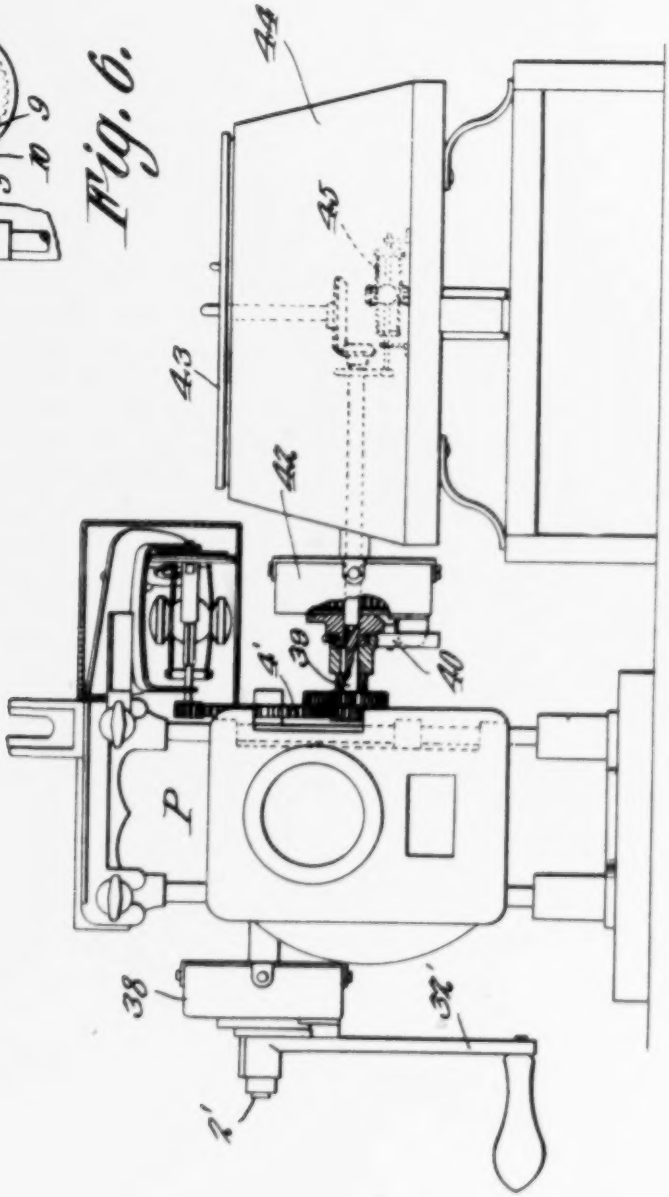

Fig. 7.

Charles W. Ebeling

Witnesses

J. R. Toulmin

R. L. Parker

Inventor,

by C. A. Snow & Co.

Attorneys.

CHARLES W. EBELING, OF NEW YORK, N Y

COMPENSATING DEVICE FOR HAND-OPERATED MOTION-PICTURE PROJECTORS AND THE LIKE.

1,261,797. Specification of Letters Patent. Patented Apr. 9, 1918.

Application filed November 18, 1916, Serial No. 132,122. Renewed January 19, 1918. Serial No. 212,837.

To all whom it may concern:

Be it known that I, CHARLES W. EBELING, a citizen of the United States, residing at New York, in the county and State of New York, have invented a new and useful Compensating Device for Hand-Operated Motion-Picture Projectors and the like, of which the following is a specification.

The present invention relates to improvements in compensating devices for hand operated motion-picture projectors and the like, one object of the present invention being the provision of means adapted to be connected to the projector when used alone and to the projector and a sound record carrier when coupled together, whereby the record of one or the records of both machines cannot be speeded regardless of the power exerted by the operator upon the crank, and also whereby an unsteady or intermittent actuation of the crank will be received in a power storing means and distributed to the record or records at a uniform rate, there being interposed between the crank and the operating shaft, a connection, which under normal conditions forms a connecting medium so that the train of gears of the projector is properly operated to feed the film at a desired speed, but when acted upon to speed the film, will permit of a certain movement of the crank without accelerating the speed of the train of gears and thus prevent the moving of the film beyond a predetermined speed.

A further object of the present invention is the provision of a governor actuated brake device operably connected to the motor mechanism of the projector, which determines the speed at which the film is to move and which if the operator attempts to speed the machine will maintain the film moving, at such predetermined speed, and to a certain extent lock the operating shaft so that the crank will move independently, to a certain degree, of the operating shaft without adding to or accelerating the movement of the film.

A still further object of the invention is the provision of means, that makes it necessary for the operator to crank the machine during its full projection operation, the governor actuated brake mechanism being concealed and locked so as to prevent access thereto except by the person in authority, so that the operator of the projector mechanism cannot at any time tamper with the same.

In many localities it is now prohibited to use an electric motor for operating the projector, mainly for the reason that the operator becomes careless, and leaves the machine, so that should the film at any time break, there is a liability of starting fires due to the lamp heat upon the stationary film. Therefore in such localities a crank actuated projector mechanism is the only one permitted by law. In the cases where the crank is connected to the motor mechanism of the projector, in many instances the operator, especially toward the end of the performance, will speed the machine, and thus in many cases tear or break the film due to the undue strain thrown thereupon, and in any event will cause the rapid production of the images upon the screen so that the desired effect in the production thereof is not attained, and in many instances, the public displeased. The present form of device, necessitates only the attachment of a governor actuated brake device to the train of gears of the projector, and the displacement of the ordinary crank with the present crank attachment including a resilient spring connection between the crank and the main shaft, so positioned that the normal tension thrown upon the main shaft will tend to wind the spring thereof, such spring being of such stiffness as under normal conditions to form a direct connection between the crank and the shaft so that the train of gears and the film may be operated without any undue strain, similarly to the simple direct connected crank of the present machine. Should, however, the operator intentionally or otherwise force the crank to speed the mechanism, the spring will be wound and thus permit the movement of the crank without unduly affecting the main shaft of the machine, and without speeding the film, the governor being actuated to operate the brake and thus maintain the speed of the film regardless of whether the crank is operated with a steady pressure or with an intermittent pressure. With the present device it has been found even when the crank is operated by intermittent movement, the governor devices maintain the film at a predetermined speed, the undue retardance of the main shaft, bringing the mechanism

to a standstill, so that the film is checked both against a too rapid or a too slow movement.

A still further object of the present invention is the provision of a yielding power storing connection interposed between a speed controlled driven element and a driving element, whereby power is received from the driving and distributed to the driven element regardless of whether the driving element is operated at a steady or pulsating speed, the driving element in this instance and preferably being manually operated and having no retarding means or retrograde movement preventing means, thereby necessitating the gripping thereof manually to insure the proper action from the power storing connection to the driven element.

With the foregoing and other objects in view which will appear as the description proceeds, the invention resides in the combination and arrangement of parts and in the details of construction hereinafter described and claimed, it being understood that changes in the precise embodiment of the invention herein disclosed, can be made within the scope of what is claimed, without departing from the spirit of the invention.

In the drawings:—

Figure 1 is a rear elevation of a projector, with the present invention in operable relation thereto.

Fig. 2 is a vertical sectional view through the governor actuated brake mechanism and through the main shaft and compensating device carried thereby with the adjacent portion of the crank also shown in section.

Fig. 3 is a section taken on line 3—3 of Fig. 2.

Figs. 4 and 5 are plan views of the compensating devices taken from the crank side, Fig. 4 showing the same in normal position when the shaft is being operated properly, and Fig. 5 illustrating the position of the crank when any undue strain is placed thereupon.

Fig. 6 is a section on line 6—6 of Fig. 1 showing the governor brake in elevation.

Fig. 7 is a view in elevation and partly in section showing the use of the present device upon a projector mechanism and a sound record carrier, both of which are connected so that the projector will operate the record carrying member.

Referring to the drawings, the numeral 1 designates the projector mechanism, which may be taken indicative of any form of machine in general use, the same being provided with the main drive shaft 2, which carries the main drive gear 3, connected through the train of gears 4 to the gear 5 the same may be connected at any point of the train or gearing that will tend to properly govern the actuation of the gear or motor, to impart the desired movement to the film (not shown).

An arm or bracket 7 in this instance properly supports the governor device and is incased in a box or casing 8, which may be of any form, but is so constructed that the person in charge may regulate the governor as will presently appear, and lock the casing, so that the operator will not have access thereto to interfere with such adjustment.

The governor actuated braking disk or member 9 is disposed for movement into and out of engagement with the braking disk 10, a support 11 being disposed for carrying the oscillatory sleeve 12, whose arm 13 carries the adjusting screw 14, which coacts with the projection 15 to thus properly support the braking member 9 so that the disk 10 will at a predetermined speed of the governor balls 17 be thrown into braking engagement with the member 9, to thus regulate the speed of the gearing 4 and consequently the film.

In order to provide a means that will automatically indicate to the proprietor or the manager of the amusement enterprise, when the operator is endeavoring to speed the machine, or when the screw 14 has, by continual use of the governor device, loosened or worn so as to permit of the speeding of the film, an alarm device is provided, the same including the two spring contacts 16, which constitute a switch, said contacts being disposed in the path to be engaged by the governor balls 17 when the same have been extended, due to centrifugal force, to such an extent as to close the contacts, and thus through the conductor 18, the battery 19, the audible alarm 20 and the conductor 21, close the alarm circuit and thus actuate the alarm 20, which is disposed at a distant point, as for instance in the office of the manager.

Connected upon the crank side of the main shaft 2 are the two spaced collars 22 and 23, while connected at one terminal 24 to the shaft 2, is the spring 25, the outer terminal 26 of which is connected to the casing 27. This casing is so disposed about the shaft, as to move independently thereof when the spring 25 is placed under undue strain, said spring 25, however, being of such a tension as to provide a resilient connecting medium between the crank 32, as will presently appear, and the shaft 2, so that under ordinary conditions, the train of gears 4 and the governor device will be operated at the desired speed so that the film will be moved without being speeded.

lar 23 and for independent movement of the shaft 2, is the sleeve 31 of the operating crank 32. It will thus be seen that the crank 32 will be capable of having movement imparted thereto independently of and without affecting the shaft 2. In order, however, to provide means for properly imparting movement to the shaft 2 through the crank 32, a lug 37 is carried by the casing 27 and is disposed in the path of the crank 32 so that when the same is moved in the direction of the arrows, as shown in Figs. 4 and 5, the casing 27 will be rotated, and through the spring 25 will impart the desired rotation to the shaft 2. Should the crank be moved in the opposite direction, the pawl 34 will have its hooked end 35 forced into engagement with one or the other of the teeth 29 of the disk 28, due to the riding of the projection 36 upon the cam portion 30 thereof and thus lock the crank 32 and the casing 27 for simultaneous movement without affecting the spring 25.

It will thus be seen that as the crank 32 is operated in the proper direction, that the lug 37, casing 27, and spring 25 will operate the shaft 2. The spring 25 is of such tension as to offer sufficient resistance during the normal actuation of the crank 32 and therefore impart to the shaft 2 and the film of the projector, the desired speed. Such speed as before noted is controlled through the governor actuated device so that the film is moved due to such adjustment of the governor actuated brake regardless of the power exerted upon the crank 32. Thus should the operator throw undue strain upon the crank 32, the lug 37 will cause the casing 27 to be rotated placing the spring 25 under tension and winding the same, such spring thus compensating for the extra exertion placed upon the crank 32 without accelerating the motion of the shaft 2 and consequently the movement of the film, the governor actuating device operating to move the disk 10 and thus maintain the proper speed in the film, even, however, should the main shaft 2 be slightly speeded or accelerated. The resilient connection, that is the spring 25 between the drum or casing 27 and the shaft 2 due to any sudden impulse imparted to the handle 32, will relieve the mechanism of the projector from any jar that would tend to tear the film, should the operator either intentionally or otherwise endeavor to speed the machine as is often the case when the last reels are being exhibited.

This mechanism also provides a means whereby the production of the images may be properly regulated so as to produce the best results and so that the movement or patrons, while the film owner is protected against the tearing and breaking of films which in many cases happen due to the undue strain thrown thereupon in speeding the machine. The resilient connection or spring 25, also provides a means which cushions the initial starting of the machine, so that even should the operator jerk the crank 32 in such initial starting, a cushioned motion will be imparted to the motor and film without throwing undue stress upon the film, that would tend in many instances to break or tear the same.

In many cases, where a sound record carrier is connected so that the disk or record platform thereof is operated from the mechanism of the projector, it is desired that the speed of the disk platform be maintained so that the same will operate in exact synchronism or consonance with the movement of the film, and in order to accomplish this, the arrangement as shown in Fig. 7, is employed.

In this instance, the compensating device 38 is mounted upon the main drive shaft 2′ of the projector mechanism P while a shaft 39 is operably connected to the train of gears 4′ of the projector, and carries an arm 40 which in reality acts similarly to the crank 32′ in transmitting motion from the projector mechanism through the compensating device 42 to the record carrying platform 43, mounted in the casing 44. A governor device 45 connected to the operating mechanism of the sound record carrier 43 operates similarly to the governor actuated brake hereinbefore described. It will also be noted that a similar governor actuated brake device is carried by the projector P and that therefore the projector P will be maintained so that its film (not shown) will be moved at the desired speed, while the compensating device 42 will form the connection between the projector and sound record carrier, said sound record carrier being controlled by the governor device 45 and in a similar manner to the governor device heretofore described for the projector.

By this means it will be seen that should the train of gears 4′ of the projector be speeded that the governor device 45 of the sound record carrier will regulate the speed of the record disk platform 43 thereof, while the governor device of the projector will control the movement of the film as in the structure heretofore described.

What is claimed is:—

1. A power storing and transmitting attachment, including a shaft, a spiral spring having one end connected thereto, a crank mounted upon the main shaft for limited independent forward and reverse movements

ment.

A still further object of the present invention is the provision of a yielding power storing connection interposed between a speed controlled driven element and a driving element, whereby power is received from the driving and distributed to the driven element regardless of whether the driving element is operated at a steady or pulsating speed, the driving element in this instance and preferably being manually operated and having no retarding means or retrograde movement preventing means, thereby necessitating the gripping thereof manually to insure the proper action from the power storing connection to the driven element.

With the foregoing and other objects in view which will appear as the description proceeds, the invention resides in the combination and arrangement of parts and in the details of construction hereinafter described and claimed, it being understood that changes in the precise embodiment of the invention herein disclosed, can be made within the scope of what is claimed, without departing from the spirit of the invention.

In the drawings:—

Figure 1 is a rear elevation of a projector, with the present invention in operable relation thereto.

Fig. 2 is a vertical sectional view through the governor actuated brake mechanism and through the main shaft and compensating device carried thereby with the adjacent portion of the crank also shown in section.

Fig. 3 is a section taken on line 3—3 of Fig. 2.

Figs. 4 and 5 are plan views of the compensating devices taken from the crank side, Fig. 4 showing the same in normal position when the shaft is being operated properly, and Fig. 5 illustrating the position of the crank when any undue strain is placed thereupon.

Fig. 6 is a section on line 6—6 of Fig. 1 showing the governor brake in elevation.

Fig. 7 is a view in elevation and partly in section showing the use of the present device upon a projector mechanism and a sound record carrier, both of which are connected so that the projector will operate the record carrying member.

Referring to the drawings, the numeral 1 designates the projector mechanism, which may be taken indicative of any form of machine in general use, the same being provided with the main drive shaft 2, which carries the main drive gear 3, connected through the train of gears 4 to the gear 5 of the governor shaft 6. This governor shaft 6 and its gear 5 are here shown as connected at the upper portion of the projector frame, but it is to be understood that erly govern the actuation of the gear or motor, to impart the desired movement to the film (not shown).

An arm or bracket 7 in this instance properly supports the governor device and is incased in a box or casing 8, which may be of any form, but is so constructed that the person in charge may regulate the governor as will presently appear, and lock the casing, so that the operator will not have access thereto to interfere with such adjustment.

The governor actuated braking disk or member 9 is disposed for movement into and out of engagement with the braking disk 10, a support 11 being disposed for carrying the oscillatory sleeve 12, whose arm 13 carries the adjusting screw 14, which coacts with the projection 15 to thus properly support the braking member 9 so that the disk 10 will at a predetermined speed of the governor balls 17 be thrown into braking engagement with the member 9, to thus regulate the speed of the gearing 4 and consequently the film.

In order to provide a means that will automatically indicate to the proprietor or the manager of the amusement enterprise, when the operator is endeavoring to speed the machine, or when the screw 14 has, by continual use of the governor device, loosened or worn so as to permit of the speeding of the film, an alarm device is provided, the same including the two spring contacts 16, which constitute a switch, said contacts being disposed in the path to be engaged by the governor balls 17 when the same have been extended, due to centrifugal force, to such an extent as to close the contacts, and thus through the conductor 18, the battery 19, the audible alarm 20 and the conductor 21, close the alarm circuit and thus actuate the alarm 20, which is disposed at a distant point, as for instance in the office of the manager.

Connected upon the crank side of the main shaft 2 are the two spaced collars 22 and 23, while connected at one terminal 24 to the shaft 2, is the spring 25, the outer terminal 26 of which is connected to the casing 27. This casing is so disposed about the shaft, as to move independently thereof when the spring 25 is placed under undue strain, said spring 25, however, being of such a tension as to provide a resilient connecting medium between the crank 32, as will presently appear, and the shaft 2, so that under ordinary conditions, the train of gears 4 and the governor device will be operated at the desired speed so that the film will be moved without being speeded.

Connected to shaft 2 beyond the casing 27 is a disk 28, provided with the teeth 29 and the cam portion 30, while mounted upon the shaft 2 between the disk 28 and the col-

crank 32. It will thus be seen that the crank 32 will be capable of having movement imparted thereto independently of and without affecting the shaft 2. In order, however, to provide means for properly imparting movement to the shaft 2 through the crank 32, a lug 37 is carried by the casing 27 and is disposed in the path of the crank 32 so that when the same is moved in the direction of the arrows, as shown in Figs. 4 and 5, the casing 27 will be rotated, and through the spring 25 will impart the desired rotation to the shaft 2. Should the crank be moved in the opposite direction, the pawl 34 will have its hooked end 35 forced into engagement with one or the other of the teeth 29 of the disk 28, due to the riding of the projection 36 upon the cam portion 30 thereof and thus lock the crank 32 and the casing 27 for simultaneous movement without affecting the spring 25.

It will thus be seen that as the crank 32 is operated in the proper direction, that the lug 37, casing 27, and spring 25 will operate the shaft 2. The spring 25 is of such tension as to offer sufficient resistance during the normal actuation of the crank 32 and therefore impart to the shaft 2 and the film of the projector, the desired speed. Such speed as before noted is controlled through the governor actuated device so that the film is moved due to such adjustment of the governor actuated brake regardless of the power exerted upon the crank 32. Thus should the operator throw undue strain upon the crank 32, the lug 37 will cause the casing 27 to be rotated placing the spring 25 under tension and winding the same, such spring thus compensating for the extra exertion placed upon the crank 32 without accelerating the motion of the shaft 2 and consequently the movement of the film, the governor actuating device operating to move the disk 10 and thus maintain the proper speed in the film, even, however, should the main shaft 2 be slightly speeded or accelerated. The resilient connection, that is the spring 25 between the drum or casing 27 and the shaft 2 due to any sudden impulse imparted to the handle 32, will relieve the mechanism of the projector from any jar that would tend to tear the film, should the operator either intentionally or otherwise endeavor to speed the machine as is often the case when the last reels are being exhibited.

This mechanism also provides a means whereby the production of the images may be properly regulated so as to produce the best results and so that the movement or passage of the film through the machine may be timed to an exactness and the proprietor thus protected as to satisfying his which in many cases happen due to the undue strain thrown thereupon in speeding the machine. The resilient connection or spring 25, also provides a means which cushions the initial starting of the machine, so that even should the operator jerk the crank 32 in such initial starting, a cushioned motion will be imparted to the motor and film without throwing undue stress upon the film, that would tend in many instances to break or tear the same.

In many cases, where a sound record carrier is connected so that the disk or record platform thereof is operated from the mechanism of the projector, it is desired that the speed of the disk platform be maintained so that the same will operate in exact synchronism or consonance with the movement of the film, and in order to accomplish this, the arrangement as shown in Fig. 7, is employed.

In this instance, the compensating device 38 is mounted upon the main drive shaft 2′ of the projector mechanism P while a shaft 39 is operably connected to the train of gears 4′ of the projector, and carries an arm 40 which in reality acts similarly to the crank 32′ in transmitting motion from the projector mechanism through the compensating device 42 to the record carrying platform 43, mounted in the casing 44. A governor device 45 connected to the operating mechanism of the sound record carrier 43 operates similarly to the governor actuated brake hereinbefore described. It will also be noted that a similar governor actuated brake device is carried by the projector P and that therefore the projector P will be maintained so that its film (not shown) will be moved at the desired speed, while the compensating device 42 will form the connection between the projector and sound record carrier, said sound record carrier being controlled by the governor device 45 and in a similar manner to the governor device heretofore described for the projector.

By this means it will be seen that should the train of gears 4′ of the projector be speeded that the governor device 45 of the sound record carrier will regulate the speed of the record disk platform 43 thereof, while the governor device of the projector will control the movement of the film as in the structure heretofore described.

What is claimed is:—

1. A power storing and transmitting attachment, including a shaft, a spiral spring having one end connected thereto, a crank mounted upon the main shaft for limited independent forward and reverse movements, and coöperable means carried by the outer end of the spring and the crank for connecting the crank and the shaft through the

spring, the tendency of the crank in normal operating direction being to wind the spring and the spring being of such a stiffness as to under normal conditions form a direct connection between the crank and the shaft.

2. A power storing and transmitting attachment, including a shaft, a spiral spring having one end secured to the shaft, a casing surrounding the shaft and independently movable relatively thereto, said casing being connected to the outer end of the spring, a crank mounted for limited independent oscillatory movement upon the main shaft, and means for connecting the crank to the casing whereby the spring forms a connecting medium between the crank and the shaft.

3. A power storing and transmitting attachment, including a shaft, a spring having one end secured to the shaft, a casing surrounding the shaft and independently movable relatively thereto, said casing being connected to the outer end of the spring, a crank mounted for limited independent oscillatory movement upon the main shaft, means for connecting the crank to the casing whereby the spring forms a connecting medium between the crank and the shaft, and coöperable means carried by the shaft and the crank to limit the unwinding movement of the spring relatively to the crank.

4. A power storing and transmitting attachment, including a shaft, a spring having one end secured to the shaft, a casing surrounding the shaft and independently movable relatively thereto, said casing being connected to the outer end of the spring, a crank mounted for independent movement upon the main shaft, means for connecting the crank to the casing whereby the spring forms a connecting medium between the crank and the shaft, a toothed cam mounted upon and rotatable with the shaft adjacent to the crank, and a pawl carried by the crank and in engagement with the toothed cam for limiting the unwinding movement of the crank and permitting a slight forward movement of the crank when undue strain is thrown thereupon.

5. The combination with a driven mechanism having a governor brake operably connected thereto, of a variable driving mechanism for the driven mechanism including a shaft, a coil spring having one end connected to the shaft, a casing rotatably mounted upon the shaft and having the opposite end of the spring connected thereto, a lug projecting from said casing, a crank mounted upon said shaft adjacent to the casing for free limited oscillatory movement, said shaft being adapted to engage the lug to connect the crank to the casing for forward movement, and coöperable means connected to the shaft and to the crank for limiting the movement of the crank in the opposite direction.

6. The combination with a driven mechanism having a governor brake operably connected thereto, of a variable driving mechanism for the driven mechanism including a shaft, a coil spring having one end connected to the shaft, a casing rotatably mounted upon the shaft and having the opposite end of the spring connected thereto, a lug projecting from said casing, a crank mounted upon said shaft adjacent to the casing for free limited oscillatory movement, said shaft being adapted to engage the lug to connect the crank to the casing for forward movement, coöperable means connected to the shaft and to the crank for limiting the movement of the crank in the opposite direction, said coöperable means including a toothed ratchet connected to the casing, and a pawl mounted upon the crank and adapted to engage the ratchet when the crank is moved away from the lug.

In testimony that I claim the foregoing as my own, I have hereto affixed my signature in the presence of two witnesses.

CHAS W. EBELING.

Witnesses:

EDWARD C. REEB,

SAMUEL RAUTENBERG.

1112

J. A. CAMERON.

MOVING PICTURE MACHINE.

APPLICATION FILED SEPT. 24, 1912. RENEWED JUNE 8, 1918.

1,273,328. Patented July 23, 1918.

4 SHEETS—SHEET 1.

Fig. 1.

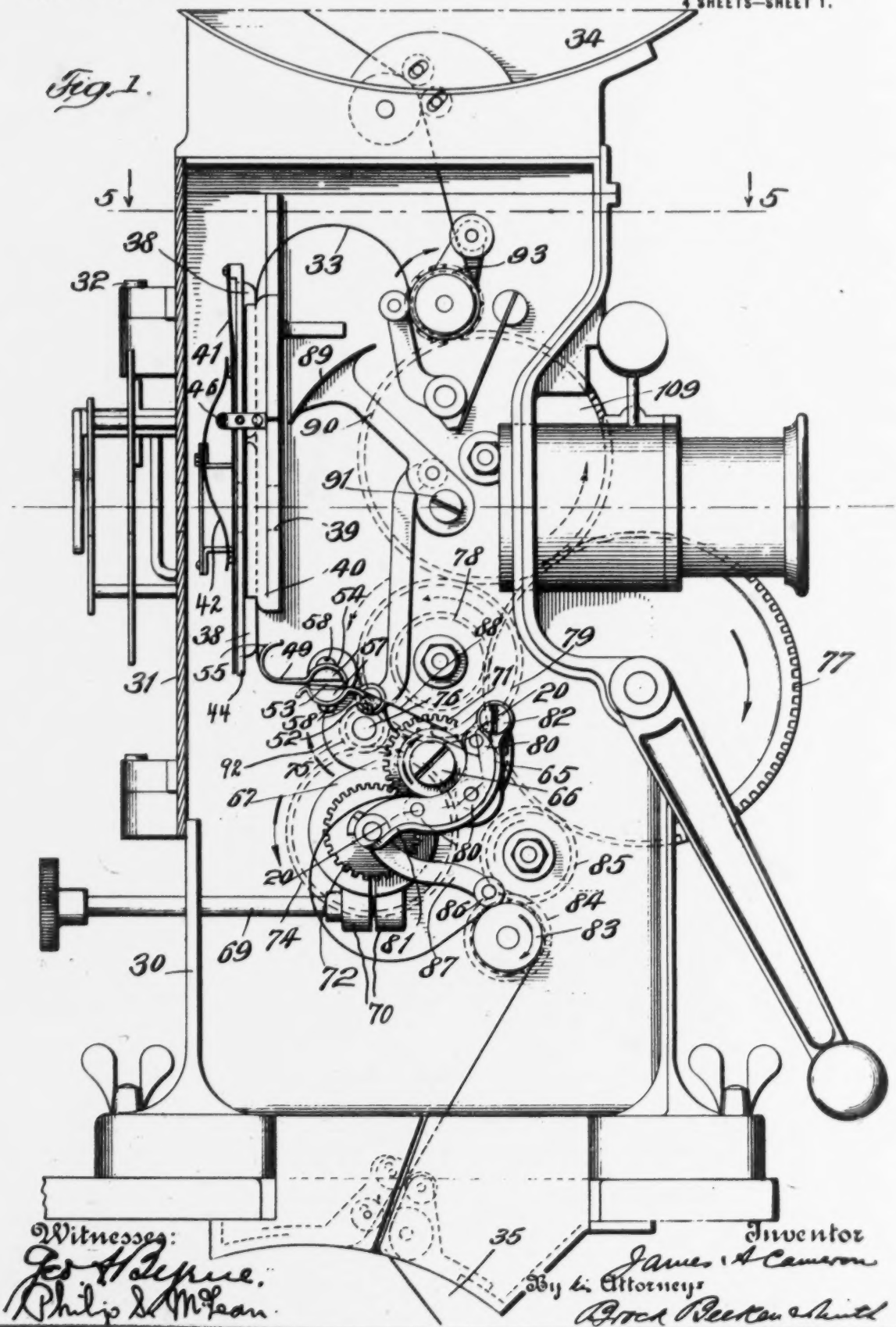

Witnesses:
Geo. A. Bryne.
Philip S. McLean

Inventor
James A. Cameron
By his Attorneys
Brock Beeken & Smith

1114

J. A. CAMERON.

MOVING PICTURE MACHINE.

APPLICATION FILED SEPT. 24, 1912. RENEWED JUNE 8, 1918.

1,273,328.

Patented July 23, 1918.

4 SHEETS—SHEET 2.

Fig: 2.

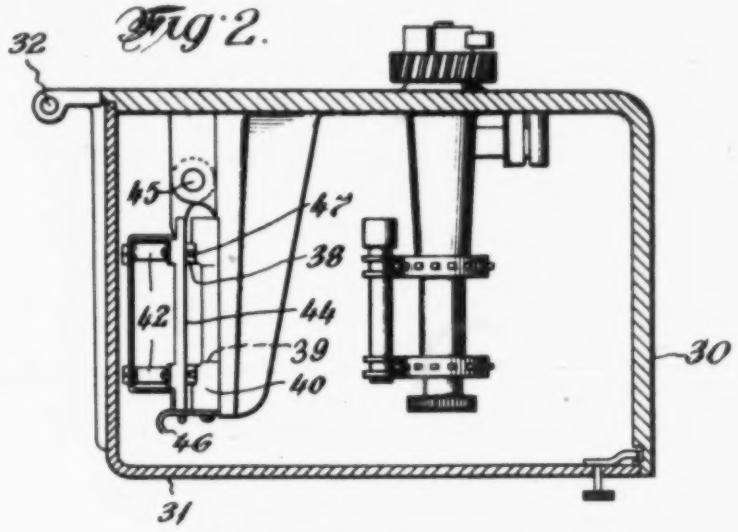

Fig: 3.

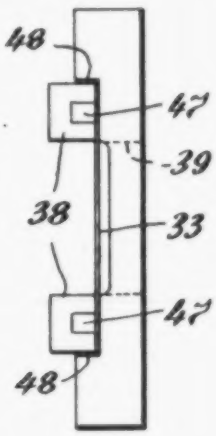

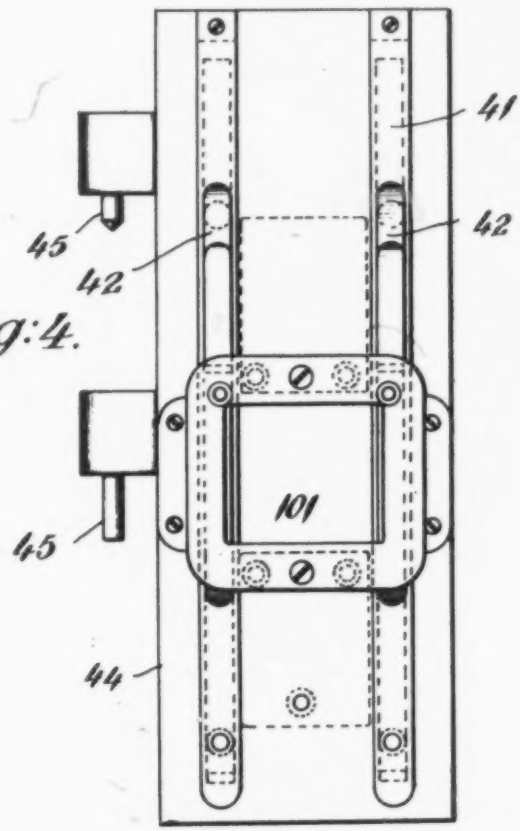

Fig: 4.

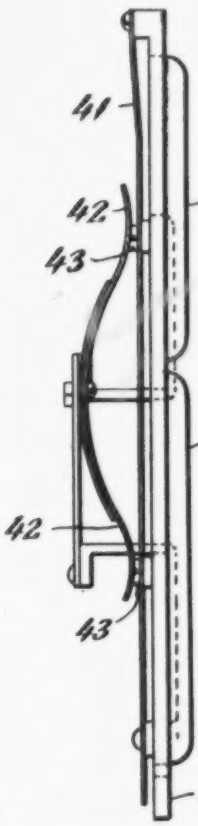

Fig: 5.

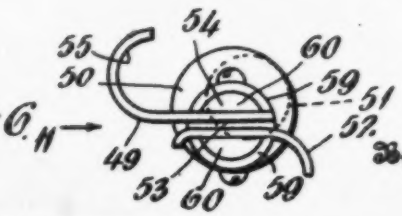

Fig: 6.

Inventor

James A Cameron

By his Attorneys

Brock Beaton & Smith

1116

J. A. CAMERON.

MOVING PICTURE MACHINE.

APPLICATION FILED SEPT. 24, 1912. RENEWED JUNE 8, 1918.

1,273,328.

Patented July 23, 1918.

4 SHEETS—SHEET 3.

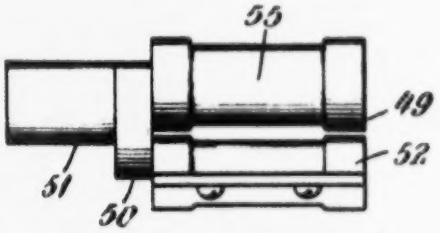

Fig: 7.

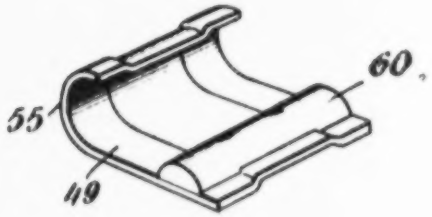

Fig: 8.

Fig: 9.

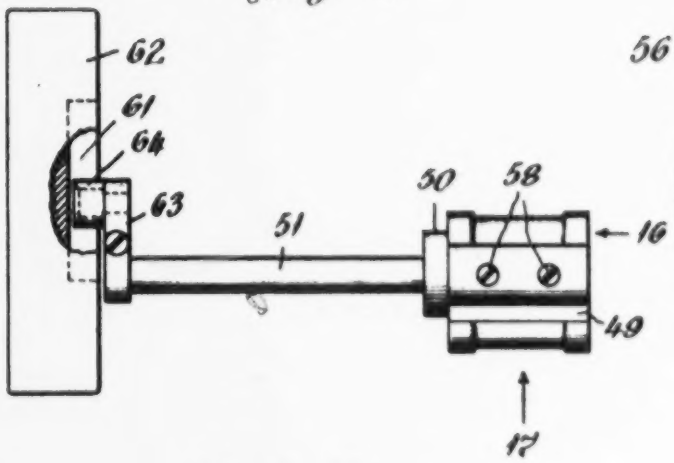

Fig: 10.

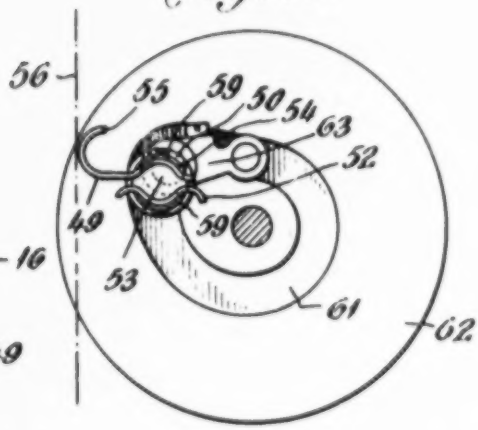

Fig: 11.

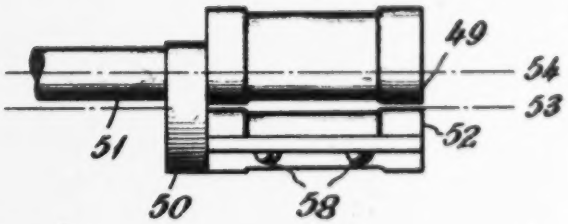

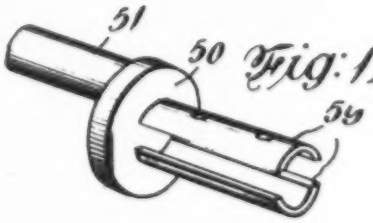

Fig: 12.

Fig: 13.

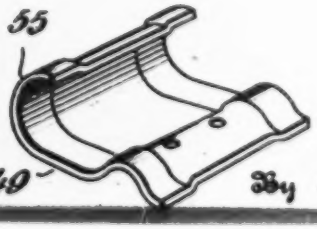

Inventor

James A Cameron

By Li Attorneys

J. A. CAMERON.

MOVING PICTURE MACHINE.

APPLICATION FILED SEPT. 24, 1912. RENEWED JUNE 8, 1918.

1,273,328.

Patented July 23, 1918.

4 SHEETS—SHEET 3.

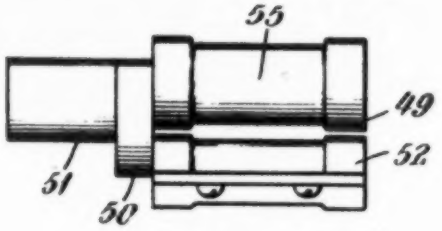

Fig: 7.

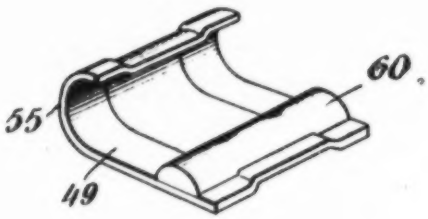

Fig: 8.

Fig: 9.

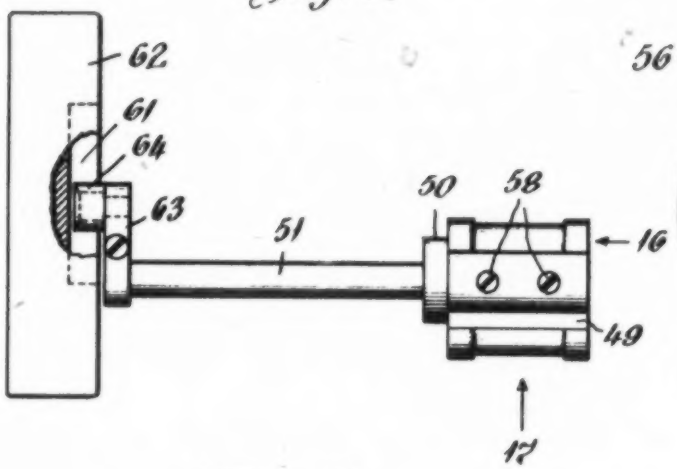

Fig: 10.

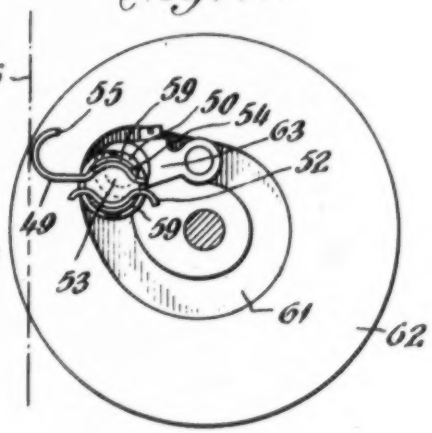

Fig: 11.

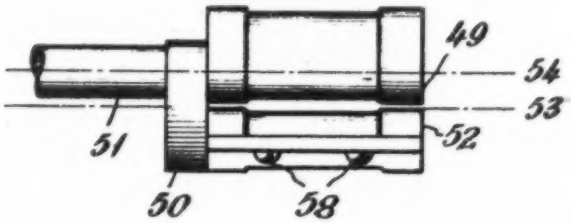

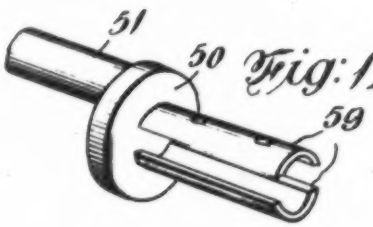

Fig: 12.

Fig: 13.

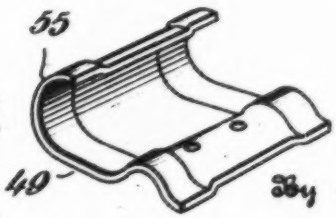

Inventor

James A Cameron

By his Attorneys

Brock Becker & Smith

J. A. CAMERON.

MOVING PICTURE MACHINE.

APPLICATION FILED SEPT. 24, 1912. RENEWED JUNE 8, 1918.

1,273,328. Patented July 23, 1918.

4 SHEETS—SHEET 4.

Fig. 14.

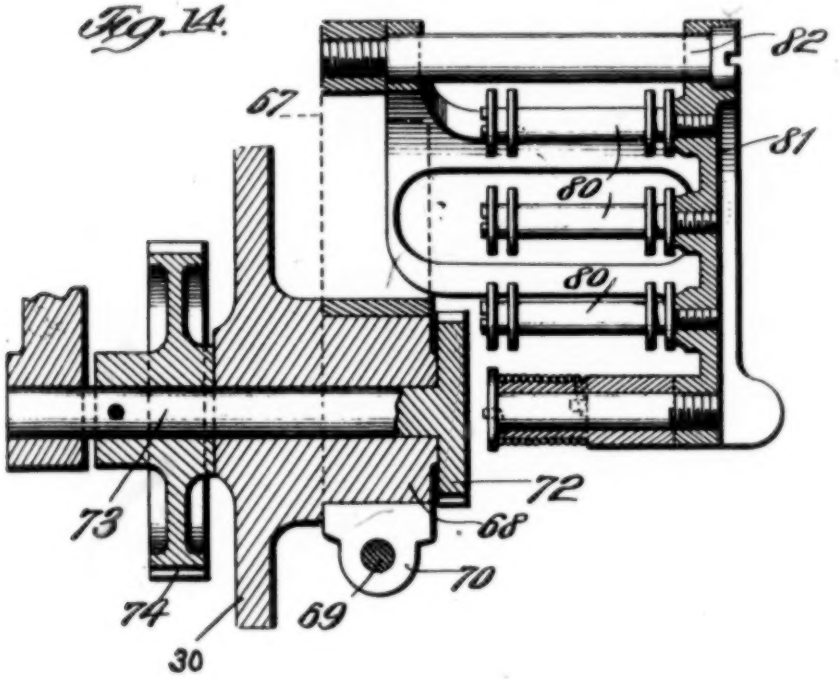

Fig. 17.

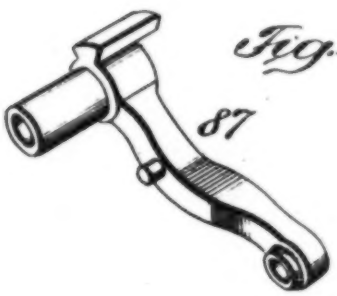

Fig. 15.

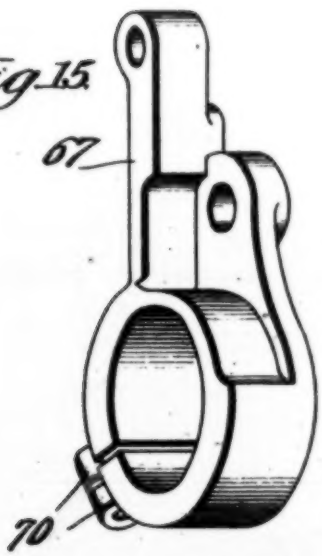

Fig. 16.

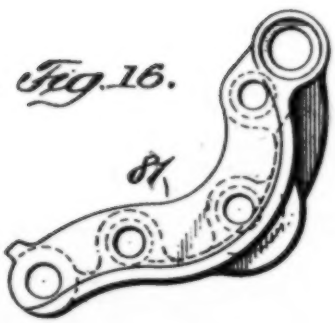

Inventor

UNITED STATES PATENT OFFICE.

JAMES A. CAMERON, OF BROOKLYN, NEW YORK, ASSIGNOR TO CAMERON PICTURE MACHINE CO., A CORPORATION OF NEW YORK.

MOVING-PICTURE MACHINE.

1,273,328. Specification of Letters Patent. Patented July 23, 1918.

Application filed September 24, 1912, Serial No. 722,009. Renewed June 8, 1918. Serial No. 239,046.

To all whom it may concern:

Be it known that I, JAMES A. CAMERON, a citizen of the United States, and a resident of the borough of Brooklyn, in the county of Kings, city and State of New York, have invented certain new and useful Improvements in Moving-Picture Machines, of which the following is a specification.

In moving picture machines the general operation both in cameras and in projectors is to intermittently advance the film past a point of exposure or "exposure opening" as it is called. For the purpose of securing uniformity in the action of the film advancing means, to smooth out wrinkles in the film and to hold the film steady while it is being exposed, the film is preferably held under tension at the exposure opening, in a tension device of some sort. This tension device may be either constant or intermittent in its action and in either event the best practice is to have the intermittent film advancing means act on the film while it is still held in the grip of the tension device, for by so doing the film is held under control at all times. The tension device by thus acting in opposition to the film advancing means serves to "retard" the advancing movement of the film. The film advancing means has a relatively quick action so as to feed the film past the exposure opening at a comparatively high rate of speed and by reason of this rapid movement, a certain "momentum" is imparted to the film which, if it is not properly checked by the tension device, is liable to permit the film to feed too far. The tension device thus bears a direct relation to the film advancing means, so that, if the tension exerted by the tension device is equal each time, then the film advancing means will advance an equal amount of film each time. If all films, or all sections of films, were alike in character it would be comparatively easy to provide a tension device which would exert a constant even tension upon the film, but different films and even different sections of the same film vary in character, some of them being rather slippery while others offer more sion upon the film and this regardless of the actual surface conditions of the film. Thus with the present type of tension device, when a piece of film is being handled which offers a moderate degree of resistance, the tension exerted upon the film may be just sufficient to overcome any momentum in the film, so that the film advancing means may act to advance an equal amount of film each time. But if a more or less "sticky" piece of film offering more than the usual frictional resistance is encountered, or if there are lumps or obstructions on the face of the film, then the tension will become greater and consequently the film advancing means may fail to advance a sufficient amount of film each time. In handling sticky films the present tension devices scrape off more or less of the sticky emulsion and this, as it accumulates in the tension device, increases the tension still further thereby further interfering with the proper operation of the film advancing means.

Having outlined the difficulties encountered with existing tension devices, I would state that one object of my invention is to overcome these various difficulties and objections and to provide a tension device which will automatically compensate for the irregularities in the surface of the film so as to exert a substantially uniform tension upon the film, regardless of surface conditions. By thus compensating for surface irregularities and keeping a constant tension on the film, the load upon the film advancing means is maintained substantially constant so that the amount of film advanced by it each time will be substantially equal.

The precise construction of my improved tension device may vary quite widely, but the same consists in general of a plurality of longitudinally arranged clamping shoes arranged to bear upon the edge portions of the film adjacent the exposure opening, which shoes are supported so as to yield freely at any point in the length thereof, together with means for forcing the shoes with a yielding pressure toward the film. In the preferred construction the clamping

J. A. CAMERON.

MOVING PICTURE MACHINE.

APPLICATION FILED SEPT. 24, 1912. RENEWED JUNE 8, 1918.

1,273,328.

Patented July 23, 1918.

4 SHEETS—SHEET 4.

Fig. 14.

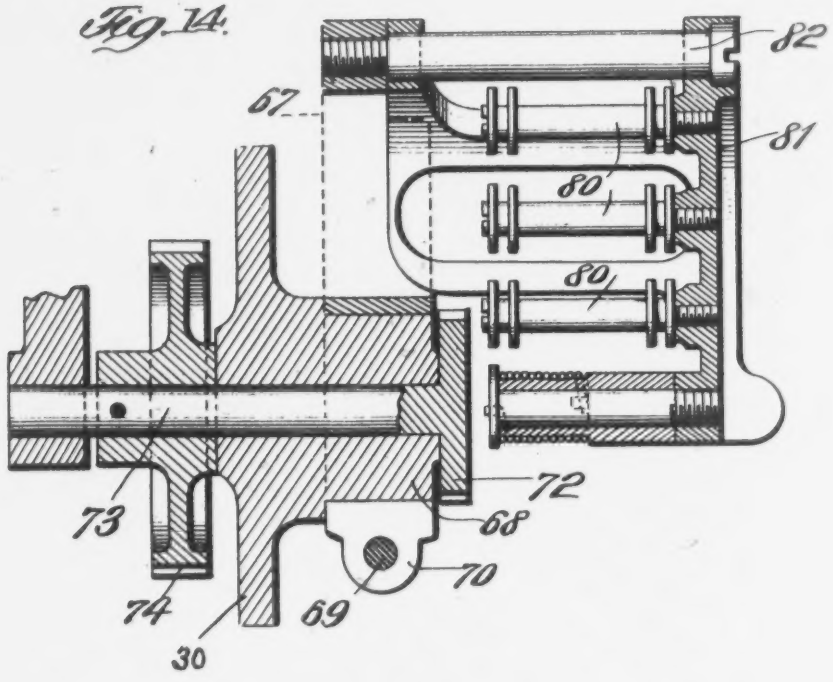

Fig. 17.

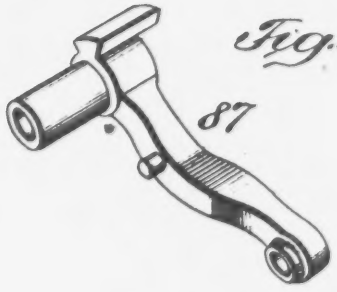

Fig. 15.

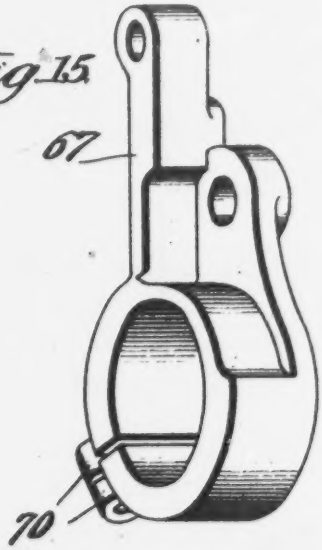

Fig. 16.

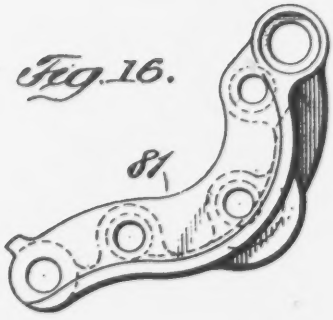

Witnesses:
Geo. H. Pegrue.
Philip S. McLean.

Inventor
James A. Cameron
By his Attorneys
Brock Becker & Arnold

UNITED STATES PATENT OFFICE.

JAMES A. CAMERON, OF BROOKLYN, NEW YORK, ASSIGNOR TO CAMERON PICTURE MACHINE CO., A CORPORATION OF NEW YORK.

MOVING-PICTURE MACHINE.

1,273,328. Specification of Letters Patent. Patented July 23, 1918.

Application filed September 24, 1912, Serial No. 722,009. Renewed June 8, 1918. Serial No. 239,046.

To all whom it may concern:

Be it known that I, JAMES A. CAMERON, a citizen of the United States, and a resident of the borough of Brooklyn, in the county of Kings, city and State of New York, have invented certain new and useful Improvements in Moving-Picture Machines, of which the following is a specification.

In moving picture machines the general operation both in cameras and in projectors is to intermittently advance the film past a point of exposure or "exposure opening" as it is called. For the purpose of securing uniformity in the action of the film advancing means, to smooth out wrinkles in the film and to hold the film steady while it is being exposed, the film is preferably held under tension at the exposure opening, in a tension device of some sort. This tension device may be either constant or intermittent in its action and in either event the best practice is to have the intermittent film advancing means act on the film while it is still held in the grip of the tension device, for by so doing the film is held under control at all times. The tension device by thus acting in opposition to the film advancing means serves to "retard" the advancing movement of the film. The film advancing means has a relatively quick action so as to feed the film past the exposure opening at a comparatively high rate of speed and by reason of this rapid movement, a certain "momentum" is imparted to the film which, if it is not properly checked by the tension device, is liable to permit the film to feed too far. The tension device thus bears a direct relation to the film advancing means, so that, if the tension exerted by the tension device is equal each time, then the film advancing means will advance an equal amount of film each time. If all films, or all sections of films, were alike in character it would be comparatively easy to provide a tension device which would exert a constant even tension upon the film, but different films and even different sections of the same film vary in character, some of them being rather slippery while others offer more resistance to movement, fresh films in particular being quite sticky. The tension devices in use at the present time have been designed to always exert a predetermined tension upon the film and this regardless of the actual surface conditions of the film. Thus with the present type of tension device, when a piece of film is being handled which offers a moderate degree of resistance, the tension exerted upon the film may be just sufficient to overcome any momentum in the film, so that the film advancing means may act to advance an equal amount of film each time. But if a more or less "sticky" piece of film offering more than the usual frictional resistance is encountered, or if there are lumps or obstructions on the face of the film, then the tension will become greater and consequently the film advancing means may fail to advance a sufficient amount of film each time. In handling sticky films the present tension devices scrape off more or less of the sticky emulsion and this, as it accumulates in the tension device, increases the tension still further thereby further interfering with the proper operation of the film advancing means.

Having outlined the difficulties encountered with existing tension devices, I would state that one object of my invention is to overcome these various difficulties and objections and to provide a tension device which will automatically compensate for the irregularities in the surface of the film so as to exert a substantially uniform tension upon the film, regardless of surface conditions. By thus compensating for surface irregularities and keeping a constant tension on the film, the load upon the film advancing means is maintained substantially constant so that the amount of film advanced by it each time will be substantially equal.

The precise construction of my improved tension device may vary quite widely, but the same consists in general of a plurality of longitudinally arranged clamping shoes arranged to bear upon the edge portions of the film adjacent the exposure opening, which shoes are supported so as to yield freely at any point in the length thereof, together with means for forcing the shoes with a yielding pressure toward the film. In the preferred construction the clamping shoes are arranged in two sets, one set at each side of the exposure opening, and each set consists of two or more independently movable clamping members. A preferred

method of mounting the clamping shoes is to support them at points intermediate the ends thereof so that they may freely rock upon such centers of support and to cause the tension means to bear upon the shoes at points intermediate the ends thereof whereby the shoes may readily yield at any point in the length of the same so as to accommodate themselves automatically to the irregularities and varying degrees of frictional resistance in the surface of the film.

Another feature of my invention resides in an improved type of beater for intermittently advancing the film. Beaters heretofore constructed, whether of the rotary or of the oscillatory type, have acted by reason of their arcuate swinging movement about their centers of support, during and at the time of advancing the film, to deflect the film more or less from its true path.

This deflection of the film out of its true path imparts additional resistance to the movement of the film and is therefore a further source of inequality in film movement. A feature of this invention consists in so designing and constructing the beater that it will, while advancing the film, move the film forwardly in a direct path without substantially deflecting the same laterally from such direct path. This feature has a direct bearing on the tension device. By my improved construction the tension device exerts a substantially uniform tension on the film. The beater in furtherance of this idea of maintaining a uniform tension, by advancing the film substantially without deflection, adds no further resistance and therefore serves to assist in maintaining the uniformity of tension exerted on the film by the tension device. The uniformity of tension thus maintained by the coöperative action of the tension device and beater insures an equal amount of film being advanced by the beater at each stroke. In combination with the beater there is preferably provided means for guiding the film in a predetermined path, and the beater is so arranged that it will advance the film in a continuation of the same path.

The film is advanced in the present machine by the coöperative action of the beater and a take-up device, which winds in the film and holds the film to prevent retrograde movement of the same while the beater is acting. This take-up device in the present instance takes the form of a film-engaging sprocket. A special feature of my invention consists in placing this take-up sprocket relatively close to the beater and without any intervening mechanism. This materially shortens the length of film between the tension means and the beater, thereby reducing to a minimum the amount of film which is not positively controlled. The tension device is preferably adjusted toward and from the beater for the purpose of "framing" the film with respect to the exposure opening.

Various other features of the invention will appear as the specification proceeds.

In the drawings accompanying this specification I have shown preferred embodiments of my invention but I would have it understood that various changes and modifications may be made therein without departing from the legitimate and intended scope of the invention.

In the drawings:

Figure 1 is an enlarged view looking at the opposite side of the machine, the hinged door appearing in section.

Fig. 2 is a plan view of the tension device, this view being taken substantially on the line 5—5 of Fig. 1.

Fig. 3 is an enlarged detail view illustrating the operation of the clamping shoes of the tension device.

Fig. 4 is an outside elevation of the clamping gate which forms a part of the tension device.

Fig. 5 is an edge view of the same.

Fig. 6 is a detail end elevation of the film-advancing beater.

Fig. 7 is an other detail view looking in the direction of arrow 11 in Fig. 6.

Fig. 8 is a detached detail view of the upper film-engaging plate of the beater.

Fig. 9 is a more or less detached view looking down on the beater and the cam for operating the same.

Fig. 10 is another view of these parts looking in the direction of the arrow 16 in Fig. 9.

Fig. 11 is an enlarged detail view of the beater looking in the direction of arrow 17 in Fig. 9.

Figs. 12 and 13 are detached detail views of the oscillating support and the upper beater arm of the beater.

Fig. 14 is a detail sectional view illustrating the manner in which the arm which carries the adjustable take-up sprocket is pivotally supported. This view is taken substantially on the line 20—20 of Fig. 1.

Figs. 15 and 16 are detail views of the swinging arm which carries the take-up sprocket and the support for the guard rolls of the sprocket.

Fig. 17 is a detail view of the link which carries the guard roll for the feeding-off sprocket.

Like reference characters refer to corresponding parts throughout the several views.

The numeral 30 designates the frame of the machine, upon which the various parts are mounted. This frame as best shown in Fig. 2, is preferably made in the form of an

The unused portion of the film 33 is supported in any suitable fashion, such support in the present instance being in the shape of a reel inclosed within the housing 34 which is secured upon the top of the frame 30. The exhibited or used portion of the film is here taken care of by being wound up on a reel inclosed within the housing 35 which housing and inclosed reel is supported on a bracket 36 dependent from the stand 37 on which the machine is mounted.

Taking up first the consideration of the tension or "retarding" device, the same consists preferably of a series of longitudinally alined shoes 38 which are disposed to engage the edge portions of the film at opposite sides of the exposure opening 39. These shoes clamp the film against a backing 40 and this backing is here the member in which the exposure opening is formed and serves as a support over the face of which the film passes. In order that the clamping shoes may accommodate themselves to varying inequalities in the surface of the film, they are so mounted that they may yield at any point in their length. For this reason they are preferably supported at a point intermediate their ends and are pressed toward the backing with a yielding pressure. This feature is best illustrated in Figs. 1, 4 and 5 wherein the clamping shoes are shown as suspended by flexible hanger straps 41, and acted upon by the ends of the double-ended flexible springs 42. The shoes are secured to the supporting straps by screws 43 or other fastenings, so located at points intermediate the ends of the shoes as to permit the shoes to rock about such centers of support. The yielding pressure may be imparted to the shoes by causing the ends of the springs to bear upon the heads of these fastenings, as shown. The tension device is preferably made so that it may be readily opened up to permit the insertion of the film and this is accomplished in a preferred form by supporting the pressure bars or shoes on a gate 44, which, being hinged at 45, may be swung to carry the tension means to operative or inoperative position. This gate may be caused to exert either a continuous or an intermittent tension on the film. In the present instance it is intended that the gate shall exert a continuous tension on the film. A spring catch 46, or like fastening device is here provided for securing the gate in its closed operative position.

In order that the operation of my improved tension device may be fully understood, it may be well to first explain the operation of the tension devices in present use. The usual tension device consists of springs bearing upon opposite ends of the bar. If the surface of the film is uniform, and even in character, a tension device of this sort will exert a practically constant tension upon the film. If, however, the surface is uneven, say by reason of a clot of emulsion on the face of the film, when this inequality reaches the foremost end of the pressure bar, it will force this end of the bar back, against the tension of the spring at that end of the bar, and will, as the film moves down, wedge the pressure bar farther out until at an intermediate point it forces both the tension springs out. The result of this is that the actual tension on the film increases from the time the obstruction enters beneath the pressure bar and places the spring at the entering end under greater tension, up to the point where the both springs are placed under greater tension. With my improvement when an obstruction enters beneath the front end of the foremost one of the clamping shoes it merely serves to rock or tilt the shoe about the center from which it is supported. And since the pressure is applied at this intermediate point of support, the rocking of the shoe does not affect the tension on the film. When the obstruction passes under the point at which the pressure is applied, the spring bearing at this point may be forced to yield somewhat, but the spring is made of sufficient flexibility and length to allow of this yielding movement without varying the tension to any sensible extent. And by breaking up the clamping device into a series of shoes in place of the one long pressure bar heretofore used, any possible inequalities are so broken up and distributed as not to vary to any appreciable extent the general uniformity of tension exerted upon the film. This has the further advantage that while the one shoe may be acting upon an irregular piece of film the other clamping shoes will be unaffected and will continue to exert their own proper tension upon the film regardless of the action of the first clamping shoe. It will thus be clear from the foregoing explanation, that the tension device will exert a substantially even and uniform tension upon the film regardless of various inequalities in the surface of the film. The tension of the pressure springs is preferably sufficient to cause the clamping shoes to iron out any wrinkles there may be in the film.

To further preserve the uniformity of tension exerted by the tension device, provision is preferably made to prevent the emulsion which may possibly be scraped from a sticky or "fresh" film from adhering to the clamping shoes and thereby increasing the tension on the film.

method of mounting the clamping shoes is to support them at points intermediate the ends thereof so that they may freely rock upon such centers of support and to cause the tension means to bear upon the shoes at points intermediate the ends thereof whereby the shoes may readily yield at any point in the length of the same so as to accommodate themselves automatically to the irregularities and varying degrees of frictional resistance in the surface of the film.

Another feature of my invention resides in an improved type of beater for intermittently advancing the film. Beaters heretofore constructed, whether of the rotary or of the oscillatory type, have acted by reason of their arcuate swinging movement about their centers of support, during and at the time of advancing the film, to deflect the film more or less from its true path.

This deflection of the film out of its true path imparts additional resistance to the movement of the film and is therefore a further source of inequality in film movement. A feature of this invention consists in so designing and constructing the beater that it will, while advancing the film, move the film forwardly in a direct path without substantially deflecting the same laterally from such direct path. This feature has a direct bearing on the tension device. By my improved construction the tension device exerts a substantially uniform tension on the film. The beater in furtherance of this idea of maintaining a uniform tension, by advancing the film substantially without deflection, adds no further resistance and therefore serves to assist in maintaining the uniformity of tension exerted on the film by the tension device. The uniformity of tension thus maintained by the coöperative action of the tension device and beater insures an equal amount of film being advanced by the beater at each stroke. In combination with the beater there is preferably provided means for guiding the film in a predetermined path, and the beater is so arranged that it will advance the film in a continuation of the same path.

The film is advanced in the present machine by the coöperative action of the beater and a take-up device, which winds in the film and holds the film to prevent retrograde movement of the same while the beater is acting. This take-up device in the present instance takes the form of a film-engaging sprocket. A special feature of my invention consists in placing this take-up sprocket relatively close to the beater and without any intervening mechanism. This materially shortens the length of film between the tension device and the sprocket thereby further reducing the chance of irregularities in handling the film. Also the take-up sprocket is preferably so mounted that it may be adjusted toward and from the beater for the purpose of "framing" the film with respect to the exposure opening.

Various other features of the invention will appear as the specification proceeds.

In the drawings accompanying this specification I have shown preferred embodiments of my invention but I would have it understood that various changes and modifications may be made therein without departing from the legitimate and intended scope of the invention.

In the drawings:

Figure 1 is an enlarged view looking at the opposite side of the machine, the hinged door appearing in section.

Fig. 2 is a plan view of the tension device, this view being taken substantially on the line 5—5 of Fig. 1.

Fig. 3 is an enlarged detail view illustrating the operation of the clamping shoes of the tension device.

Fig. 4 is an outside elevation of the clamping gate which forms a part of the tension device.

Fig. 5 is an edge view of the same.

Fig. 6 is a detail end elevation of the film-advancing beater.

Fig. 7 is an other detail view looking in the direction of arrow 11 in Fig. 6.

Fig. 8 is a detached detail view of the upper film-engaging plate of the beater.

Fig. 9 is a more or less detached view looking down on the beater and the cam for operating the same.

Fig. 10 is another view of these parts looking in the direction of the arrow 16 in Fig. 9.

Fig. 11 is an enlarged detail view of the beater looking in the direction of arrow 17 in Fig. 9.

Figs. 12 and 13 are detached detail views of the oscillating support and the upper beater arm of the beater.

Fig. 14 is a detail sectional view illustrating the manner in which the arm which carries the adjustable take-up sprocket is pivotally supported. This view is taken substantially on the line 20—20 of Fig. 1.

Figs. 15 and 16 are detail views of the swinging arm which carries the take-up sprocket and the support for the guard rolls of the sprocket.

Fig. 17 is a detail view of the link which carries the guard roll for the feeding-off sprocket.

Like reference characters refer to corresponding parts throughout the several views.

The numeral 30 designates the frame of the machine, upon which the various parts are mounted. This frame as best shown in Fig. 2, is preferably made in the form of an angular casing which incloses the various working parts, access being had to such parts by means of an angular-sided door 31, hinged at 32 to the side wall of the casing.

The unused portion of the film 33 is supported in any suitable fashion, such support in the present instance being in the shape of a reel inclosed within the housing 34 which is secured upon the top of the frame 30. The exhibited or used portion of the film is here taken care of by being wound up on a reel inclosed within the housing 35 which housing and inclosed reel is supported on a bracket 36 dependent from the stand 37 on which the machine is mounted.

Taking up first the consideration of the tension or "retarding" device, the same consists preferably of a series of longitudinally alined shoes 38 which are disposed to engage the edge portions of the film at opposite sides of the exposure opening 39. These shoes clamp the film against a backing 40 and this backing is here the member in which the exposure opening is formed and serves as a support over the face of which the film passes. In order that the clamping shoes may accommodate themselves to varying inequalities in the surface of the film, they are so mounted that they may yield at any point in their length. For this reason they are preferably supported at a point intermediate their ends and are pressed toward the backing with a yielding pressure. This feature is best illustrated in Figs. 1, 4 and 5 wherein the clamping shoes are shown as suspended by flexible hanger straps 41, and acted upon by the ends of the double-ended flexible springs 42. The shoes are secured to the supporting straps by screws 43 or other fastenings, so located at points intermediate the ends of the shoes as to permit the shoes to rock about such centers of support. The yielding pressure may be imparted to the shoes by causing the ends of the springs to bear upon the heads of these fastenings, as shown. The tension device is preferably made so that it may be readily opened up to permit the insertion of the film and this is accomplished in a preferred form by supporting the pressure bars or shoes on a gate 44, which, being hinged at 45, may be swung to carry the tension means to operative or inoperative position. This gate may be caused to exert either a continuous or an intermittent tension on the film. In the present instance it is intended that the gate shall exert a continuous tension on the film. A spring catch 46, or like fastening device is here provided for securing the gate in its closed operative position.

In order that the operation of my improved tension device may be fully understood, it may be well to first explain the operation of the tension devices in present use. The usual tension device consists of a single long pressure bar disposed one at each side of the exposure opening and pressed against the film by spiral or other springs bearing upon opposite ends of the bar. If the surface of the film is uniform, and even in character, a tension device of this sort will exert a practically constant tension upon the film. If, however, the surface is uneven, say by reason of a clot of emulsion on the face of the film, when this inequality reaches the foremost end of the pressure bar, it will force this end of the bar back, against the tension of the spring at that end of the bar, and will, as the film moves down, wedge the pressure bar farther out until at an intermediate point it forces both the tension springs out. The result of this is that the actual tension on the film increases from the time the obstruction enters beneath the pressure bar and places the spring at the entering end under greater tension, up to the point where the both springs are placed under greater tension. With my improvement when an obstruction enters beneath the front end of the foremost one of the clamping shoes it merely serves to rock or tilt the shoe about the center from which it is supported. And since the pressure is applied at this intermediate point of support, the rocking of the shoe does not affect the tension on the film. When the obstruction passes under the point at which the pressure is applied, the spring bearing at this point may be forced to yield somewhat, but the spring is made of sufficient flexibility and length to allow of this yielding movement without varying the tension to any sensible extent. And by breaking up the clamping device into a series of shoes in place of the one long pressure bar heretofore used, any possible inequalities are so broken up and distributed as not to vary to any appreciable extent the general uniformity of tension exerted upon the film. This has the further advantage that while the one shoe may be acting upon an irregular piece of film the other clamping shoes will be unaffected and will continue to exert their own proper tension upon the film regardless of the action of the first clamping shoe. It will thus be clear from the foregoing explanation, that the tension device will exert a substantially even and uniform tension upon the film regardless of various inequalities in the surface of the film. The tension of the pressure springs is preferably sufficient to cause the clamping shoes to iron out any wrinkles there may be in the film.

To further preserve the uniformity of tension exerted by the tension device, provision is preferably made to prevent the emulsion which may possibly be scraped from a sticky or "fresh" film from adhering to the clamping shoes and thereby increasing the tension on the film. This is done in the present instance by grooving the contact face of the clamping shoes, as best shown at 47 in Figs. 2 and 3. By this con-

struction, any loose emulsion or other foreign material coming in contatct with the clamping shoes, is carried on into these grooves in the face of the shoes where it can have no injurious effect. The side edges of the film are preferably guided during passage past the exposure opening by coming into contact with the guiding surfaces 48 on the face of the support 40.

Taking up now the means for intermittently advancing the film, the same consists in the present instance of a take-up device which is adapted to take up a predetermined amount of film once to each cycle of the machine, and a pivoted beater which acts upon the film to intermittently advance a picture-length of film past the exposure opening. The beater is shown located below the tension device and is constructed and arranged to advance the film in a path forming a continuation of the path in which it is guided by the tension device. Specifically it consists of a film-engaging plate 49, carried by the support 50 on the end of the oscillating shaft 51. Coöperating with this upper film-engaging plate there is preferably a lower plate 52 extending rearwardly from the point of support, the film being passed between the two plates in the manner illustrated in Fig. 1. The means by which the beater is caused to advance the film in a direct path without deflecting it from such path, here consists in making the beater of a particular conformation and in placing the center 53, corresponding to the center of support for the blades, eccentric with respect to the center 54 of the supporting shaft, which latter center corresponds to and forms the center of oscillation. This eccentricity existing between the centers of support and oscillation is best illustrated in Figs. 1, 6, 7 and 10. The operation will be understood from this latter figure, wherein it will be clear that during the active downward stroke of the beater, the eccentric mounting will cause the beater to have a bodily sidewise sweeping movement rearwardly and in the direction of advancing movement of the film. The outward active end 55 of the beater is of such a curvature and is so designed that it will, during this bodily movement of the beater, carry the film in substantially the same direct path. This line of advancement represented by the line 56, corresponds to and in fact forms a substantial continuation of the path in which the film is guided by the retarding or tension device, as will be clear from Fig. 1. The beater therefore by thus advancing the film in substantially the same path in which it exerted by the tension device. It will further be seen that upon the down stroke of the beater the lower rearwardly-extending blade of the beater acts as a fulcrum to support the film at that point, while the active forwardly-extending blade is pulling down on the film to advance the same past the exposure opening. At the same time that the lower rear blade is serving as a fulcrum, it is also, by reason of the eccentric bodily movement of the beater, shifting over laterally in the same direction of movement with the film. So that at the same time the beater is drawing on the film to advance the same, it is also moving along bodily with the film. There is thus comparatively slight relative movement between the beater and the film which it is advancing, so that the friction of the film in passing through the beater is reduced to a minimum and the objectionable "crawl"—which this relative movement between the beater and film has been termed—is practically eliminated.

The film-engaging plates may be made integral with the oscillating support which carries them, and if not made integral may be secured in place in various ways. In Fig. 1 for instance they are secured to the spaced supporting members 57 carried by the oscillating support, by having their inner ends shaped to fit around such supporting members and secured thereto by fastening screws 58. A reverse construction is employed in Figs. 9 to 13, wherein the film-engaging blades are shaped to fit the inside of the somewhat curved supporting members 59, while in Figs. 6, 7 and 8, instead of shaping the blades to fit the curved supporting members 59, filler pieces 60 are attached to the blades which are shaped to fit the curved supporting members.

The beater is operated by any suitable means. In the present case the rock shaft which carries the beater is oscillated by means of a cam groove 61 in the face of the balance wheel 62, the rock shaft carrying at its end a rocker arm 63, bearing a cam roll 64, engaging in such cam groove. Figs. 9 and 10 best show this feature.

The take-up device in the present embodiment consists of a continuously rotating sprocket 65 arranged immediately in rear of the beater. By placing this take-up sprocket as close as possible to the beater and without any intervening mechanism, the length of film between the tension device and the take-up device is reduced to a minimum and this reduction in the stretch of film between these two points materially reduces the chance for inaccuracy in feeding of the film.

down more film or to release the film. To this end it is here shown as journaled at 66 on the free end of an arm 67 which is pivoted to swing on a supporting hub 68. This arm when once adjusted may be suitably held in such adjusted position, the holding means in this instance taking the form of a clamping screw 69, which may be operated to clamp the split sleeve portions 70 of the sprocket-carrying arm upon the supporting hub.

The gearing for operating the take-up sprocket is arranged to drive the sprocket regardless of its adjusted position, and this is here accomplished by causing the gear 71, carried by the sprocket to mesh with a driving gear 72 concentric with the hub around which the sprocket is adjusted. This driving gear 72 is carried on the inner end of the shaft 73 which extends concentrically through the hub and carries on its outer end the gear 74 which meshes with the pinion 75 on the balance wheel shaft 76. The balance wheel shaft is in turn driven from the main drive gear 77 through the medium of pinion 78 which is in mesh with the drive gear, and gear 79 which moves with pinion 78 and meshes with the pinion 75 on the balance wheel shaft.

The film is held in proper engagement with the take-up sprocket by suitable guide rolls 80, which rolls are preferably mounted on an arm 81 pivoted at 82, so that it may be swung to throw the guide rolls out of the way when first threading the film through the machine. Associated with the take-up device there may be a feeding-off device for advancing the film to the lower reel or film receiver. Such a feeding-off device is here shown in the form of a continuously rotating sprocket 83, operated from the main drive gear by gears 84 and 85. A guard roll 86 may be utilized to hold the film in proper engagement with the feeding-off sprocket and by connecting the link 87, which carries this guard roll, with the pivoted arm 81 carrying the guard rolls of the take-up device, the guard rolls of both take-up and feeding-off devices may be simultaneously thrown to inoperative position.

It will be noticed that the center of pivotal support about which the take-up sprocket swings, is located below the beater at such a point that the shifting of the sprocket toward and away from the beater will be accomplished without substantially varying the angle of the section of film 88, issuing from the beater at any given time in the stroke of the beater. This prevents the adjustment of the take-up from affecting the timing of the beater in any way. This point will be clear from Fig. 1.

shown, the same consisting of a blade 89, carried on the end of a pivoted arm 90, which swings upon the center 91. The means for vibrating this arm to carry the shutter past the exposure opening is here a crank disk 92 on the inner end of the balance wheel shaft.

For the purpose of withdrawing the film from the supply reel or other film support a feed sprocket 93 is preferably employed.

To further insure of the absolute and accurate control of the film, it is preferably guided right down to the point where it is acted upon by the beater. This guiding is accomplished in the present instance by extending the lowermost of the clamping shoes down to a point substantially in line with the beater, as indicated in Fig. 1.

While I have, for illustrative purposes, shown and described my invention as a projector for exhibiting pictures, I would have it understood that the invention as a whole or the various features thereof may equally as well be applied to a camera for taking the pictures, and the claims will be construed accordingly.

The construction of the fireshield and the arrangement thereof relative to other parts is not claimed herein but is claimed in my copending application filed January 3, 1916, Ser. No. 69,731.

The construction relating to the hinged door and casing, shown more particularly in Fig. 2, is claimed in my copending application filed January 3, 1916, Ser. No. 69,732.

What is claimed, is:

1. The combination in a moving picture machine provided with an exposure opening, of a take-up device for taking up an equal amount of film once to each cycle of the machine, a tension device exerting a substantially uniform tension on the film and guiding the film in a predetermined path, and a beater movable in a substantial continuation of said predetermined path, said beater acting upon the film to intermittently advance the same in said continuation of the path in which the film is guided by the tension device, whereby to maintain the uniformity of the tension exerted by the tension device.

2. The combination in a moving picture machine provided with an exposure opening, of a retarding device exerting a substantially uniform tension on the film, arranged to guide the film in a substantially straight path past the exposure opening, and a beater, movable to and fro in a substantially straight path, said beater acting on the film to intermittently advance the same in said substantially straight

struction, any loose emulsion or other foreign material coming in contatct with the clamping shoes, is carried on into these grooves in the face of the shoes where it can have no injurious effect. The side edges of the film are preferably guided during passage past the exposure opening by coming into contact with the guiding surfaces 48 on the face of the support 40.

Taking up now the means for intermittently advancing the film, the same consists in the present instance of a take-up device which is adapted to take up a predetermined amount of film once to each cycle of the machine, and a pivoted beater which acts upon the film to intermittently advance a picture-length of film past the exposure opening. The beater is shown located below the tension device and is constructed and arranged to advance the film in a path forming a continuation of the path in which it is guided by the tension device. Specifically it consists of a film-engaging plate 49, carried by the support 50 on the end of the oscillating shaft 51. Coöperating with this upper film-engaging plate there is preferably a lower plate 52 extending rearwardly from the point of support, the film being passed between the two plates in the manner illustrated in Fig. 1. The means by which the beater is caused to advance the film in a direct path without deflecting it from such path, here consists in making the beater of a particular conformation and in placing the center 53, corresponding to the center of support for the blades, eccentric with respect to the center 54 of the supporting shaft, which latter center corresponds to and forms the center of oscillation. This eccentricity existing between the centers of support and oscillation is best illustrated in Figs. 1, 6, 7 and 10. The operation will be understood from this latter figure, wherein it will be clear that during the active downward stroke of the beater, the eccentric mounting will cause the beater to have a bodily sidewise sweeping movement rearwardly and in the direction of advancing movement of the film. The outward active end 55 of the beater is of such a curvature and is so designed that it will, during this bodily movement of the beater, carry the film in substantially the same direct path. This line of advancement represented by the line 56, corresponds to and in fact forms a substantial continuation of the path in which the film is guided by the retarding or tension device, as will be clear from Fig. 1. The beater therefore by thus advancing the film in substantially the same path in which it is previously guided, imparts no further resistance, by bending or otherwise, to the film, and hence actually serves to assist in maintaining the same uniformity of tension exerted by the tension device. It will further be seen that upon the down stroke of the beater the lower rearwardly-extending blade of the beater acts as a fulcrum to support the film at that point, while the active forwardly-extending blade is pulling down on the film to advance the same past the exposure opening. At the same time that the lower rear blade is serving as a fulcrum, it is also, by reason of the eccentric bodily movement of the beater, shifting over laterally in the same direction of movement with the film. So that at the same time the beater is drawing on the film to advance the same, it is also moving along bodily with the film. There is thus comparatively slight relative movement between the beater and the film which it is advancing, so that the friction of the film in passing through the beater is reduced to a minimum and the objectionable "crawl"—which this relative movement between the beater and film has been termed—is practically eliminated.

The film-engaging plates may be made integral with the oscillating support which carries them, and if not made integral may be secured in place in various ways. In Fig. 1 for instance they are secured to the spaced supporting members 57 carried by the oscillating support, by having their inner ends shaped to fit around such supporting members and secured thereto by fastening screws 58. A reverse construction is employed in Figs. 9 to 13, wherein the film-engaging blades are shaped to fit the inside of the somewhat curved supporting members 59, while in Figs. 6, 7 and 8, instead of shaping the blades to fit the curved supporting members 59, filler pieces 60 are attached to the blades which are shaped to fit the curved supporting members.

The beater is operated by any suitable means. In the present case the rock shaft which carries the beater is oscillated by means of a cam groove 61 in the face of the balance wheel 62, the rock shaft carrying at its end a rocker arm 63, bearing a cam roll 64, engaging in such cam groove. Figs. 9 and 10 best show this feature.

The take-up device in the present embodiment consists of a continuously rotating sprocket 65 arranged immediately in rear of the beater. By placing this take-up sprocket as close as possible to the beater and without any intervening mechanism, the length of film between the tension device and the take-up device is reduced to a minimum and this reduction in the stretch of film between these two points materially reduces the chance for inaccuracy in feeding of the film.

For the purpose of framing the pictures on the film with respect to the exposure opening, the take-up sprocket is preferably mounted so that it may be adjusted to draw

down more film or to release the film. To this end it is here shown as journaled at 66 on the free end of an arm 67 which is pivoted to swing on a supporting hub 68. This arm when once adjusted may be suitably held in such adjusted position, the holding means in this instance taking the form of a clamping screw 69, which may be operated to clamp the split sleeve portions 70 of the sprocket-carrying arm upon the supporting hub.

The gearing for operating the take-up sprocket is arranged to drive the sprocket regardless of its adjusted position, and this is here accomplished by causing the gear 71, carried by the sprocket to mesh with a driving gear 72 concentric with the hub around which the sprocket is adjusted. This driving gear 72 is carried on the inner end of the shaft 73 which extends concentrically through the hub and carries on its outer end the gear 74 which meshes with the pinion 75 on the balance wheel shaft 76. The balance wheel shaft is in turn driven from the main drive gear 77 through the medium of pinion 78 which is in mesh with the drive gear, and gear 79 which moves with pinion 78 and meshes with the pinion 75 on the balance wheel shaft.

The film is held in proper engagement with the take-up sprocket by suitable guide rolls 80, which rolls are preferably mounted on an arm 81 pivoted at 82, so that it may be swung to throw the guide rolls out of the way when first threading the film through the machine. Associated with the take-up device there may be a feeding-off device for advancing the film to the lower reel or film receiver. Such a feeding-off device is here shown in the form of a continuously rotating sprocket 83, operated from the main drive gear by gears 84 and 85. A guard roll 86 may be utilized to hold the film in proper engagement with the feeding-off sprocket and by connecting the link 87, which carries this guard roll, with the pivoted arm 81 carrying the guard rolls of the take-up device, the guard rolls of both take-up and feeding-off devices may be simultaneously thrown to inoperative position.

It will be noticed that the center of pivotal support about which the take-up sprocket swings, is located below the beater at such a point that the shifting of the sprocket toward and away from the beater will be accomplished without substantially varying the angle of the section of film 88, issuing from the beater at any given time in the stroke of the beater. This prevents the adjustment of the take-up from affecting the timing of the beater in any way. This point will be clear from Fig. 1.

A shutter may or may not be used, as found necessary or desirable. In the illustration a shutter of the oscillating type is shown, the same consisting of a blade 89, carried on the end of a pivoted arm 90, which swings upon the center 91. The means for vibrating this arm to carry the shutter past the exposure opening is here a crank disk 92 on the inner end of the balance wheel shaft.

For the purpose of withdrawing the film from the supply reel or other film support a feed sprocket 93 is preferably employed.

To further insure of the absolute and accurate control of the film, it is preferably guided right down to the point where it is acted upon by the beater. This guiding is accomplished in the present instance by extending the lowermost of the clamping shoes down to a point substantially in line with the beater, as indicated in Fig. 1.

While I have, for illustrative purposes, shown and described my invention as a projector for exhibiting pictures, I would have it understood that the invention as a whole or the various features thereof may equally as well be applied to a camera for taking the pictures, and the claims will be construed accordingly.

The construction of the fireshield and the arrangement thereof relative to other parts is not claimed herein but is claimed in my copending application filed January 3, 1916, Ser. No. 69,731.

The construction relating to the hinged door and casing, shown more particularly in Fig. 2, is claimed in my copending application filed January 3, 1916, Ser. No. 69,732.

What is claimed, is:

1. The combination in a moving picture machine provided with an exposure opening, of a take-up device for taking up an equal amount of film once to each cycle of the machine, a tension device exerting a substantially uniform tension on the film and guiding the film in a predetermined path, and a beater movable in a substantial continuation of said predetermined path, said beater acting upon the film to intermittently advance the same in said continuation of the path in which the film is guided by the tension device, whereby to maintain the uniformity of the tension exerted by the tension device.

2. The combination in a moving picture machine provided with an exposure opening, of a retarding device exerting a substantially uniform tension on the film, arranged to guide the film in a substantially straight path past the exposure opening, and a beater, movable to and fro in a substantially straight path, said beater acting on the film to intermittently advance the same in said substantially straight path from the point where it issues from the retarding device, and in substantial alinement with the path of the film past the exposure

opening whereby to maintain the uniformity of tension exerted upon the film by the retarding device.

3. The combination in a moving picture machine provided with an exposure opening, of a take-up device for taking up an equal amount of film once to each cycle of the machine, a retarding device exerting a substantially uniform tension on the film, and a beater movable to and fro and acting upon the film to intermittently advance the same past the exposure opening, the said beater having a bodily movement in the direction of movement of the film past the exposure opening so as to present no additional sliding resistance to the passage of the film.

4. The combination in a moving picture machine provided with an exposure opening, of a take-up device for taking up an equal amount of film once to each cycle of the machine, a retarding device exerting a substantially uniform tension on the film, and a beater movable to and fro and acting upon the film to intermittently advance the same past the exposure opening, the said beater having a bodily movement in the direction of movement of the film so as to present no additional sliding resistance to the passage of the film and further arranged to advance the film without substantially deflecting it from the path in which it is guided by the retarding device, whereby the tension exerted upon the film by the retarding device will be maintained substantially uniform irrespective of the action of the beater.

5. The combination in a moving picture machine, of means for guiding the film in a predetermined path, a beater movable in a substantially undeflected path and acting on the film to advance the film on a line forming a substantial continuation of the path in which the film is guided, and means for operating the beater.

6. The combination in a moving picture machine, of means for guiding the film in a substantially straight path, a pivoted beater acting on the film, and having a film engaging part arranged to move in a substantially straight line, said beater arranged to advance the film in a substantially straight line, forming a substantial continuation of the path in which the film is guided, and means for operating the beater.

7. Film advancing mechanism for moving picture machines comprising means for guiding the film in a straight line path, a pivoted beater acting on the film and arranged during a portion of the movement around its pivotal center to exert a pull on

8. In a moving picture machine, the combination with a film support provided with a plane surface over which the film is guided, of a pivoted beater located to one side of the film support and having a part adapted to move substantially in a plane and to engage the film issuing from said support, the said beater arranged to exert a pull on the film substantially in continuance of the plane of the support, and means for operating the beater.

9. Film advancing mechanism for moving picture machines comprising a beater arm extending forwardly from a given center, a pivotal support for the beater arm eccentrically disposed with respect to the said center, and means for rocking the beater arm upon the pivotal support.

10. The combination in a moving picture machine provided with an exposure opening, of means for guiding the film in a predetermined path past the exposure opening, and means for intermittently advancing the film in a line forming a substantial continuation of the path in which the film is guided, comprising a beater extending from a given center forwardly toward the path of the film, a pivotal support for the beater offset eccentrically with respect to the center aforesaid, and means for oscillating the beater about the center of pivotal support.

11. Film advancing mechanism for moving picture machines comprising an upper member extending forwardly from a given center, a lower member spaced from the upper member and extending rearwardly from the given center, a pivotal support for said members offset eccentrically with respect to the center aforesaid, and means for rocking the members about the pivotal support.

12. In a moving picture machine, the combination with means for guiding the film in a predetermined path, of means for intermittently advancing the film in substantially a continuation of the same path, comprising a beater pivoted at one end and having its free end curved to exert a substantially straight pull on the film during a portion of the movement of the beater, and means for oscillating the beater about its pivotal center.

13. In a moving picture machine, the combination with means for guiding the film in a predetermined path, of means for intermittently advancing the film in a substantial continuation of the same path, comprising a beater extending forwardly from a given center and terminating in a film engaging portion curved to exert a straight pull on the film during a portion of the movement of the beater, a pivot supporting the beater and

picture machines comprising a rock shaft, a supporting member carried at one end of the rock-shaft and eccentrically disposed with respect to the same, a film-engaging plate secured to the supporting member, and means for oscillating the rock shaft.

15. Film advancing means for moving picture machines comprising a rock shaft, a pair of spaced supporting members eccentrically carried at one end of the rock shaft, a film engaging plate secured to one of the supporting members and extending forwardly from the same, a film-engaging plate secured to the other supporting member and extending rearwardly from the same, and means for oscillating the rock shaft.

16. Film advancing means for moving picture machines comprising a pivoted support, a forwardly-extending film-engaging plate carried by the pivoted support, a fulcrum carried by the pivoted support and located in rear of and below the film-engaging plate so as to support the film while it is being acted upon by the film-engaging plate, and means for oscillating the pivoted support, the fulcrum being mounted eccentrically upon the pivoted support so as to move during the active portion of the stroke in the direction of movement of the film.

17. Film advancing means for moving picture machines comprising a pivoted support, means for oscillating the pivoted support, a film-engaging plate carried by the pivoted support constructed and arranged during a portion of its stroke to advance the film in a relatively straight path, and a fulcrum carried by the pivoted support, arranged to support the film while it is being acted upon by the film-engaging plate and having during the active stroke of the film-engaging plate, a bodily movement in the direction of movement of the film.

18. The combination in a moving picture machine provided with an exposure opening, of a take-up device, means for guiding the film with relation to the take-up device, a beater interposed between the exposure opening and the take-up device for intermittently advancing the film past the exposure opening, and means for bodily shifting the take-up device and the guiding means to adjust the film with respect to the exposure opening.

19. The combination with a moving picture machine provided with an exposure opening, of a beater for intermittently advancing the film past the exposure opening, a combined guide and take-up over which the film passes after leaving the beater, and means for shifting the combined guide and take-up with respect to the beater to adjust the film with

machine provided with an exposure opening, of means for guiding the film past the exposure opening, a take-up device spaced from the guiding means aforesaid, means for guiding the film with relation to the take-up device, a beater arranged to act on the stretch of film between the guiding means and the take-up device and the coöperating guiding means, and means for bodily shifting the take-up device with respect to the beater to adjust the film with relation to the exposure opening.

21. In a moving picture machine, the combination with a film support provided with an exposure opening, a take-up sprocket at the lower end of the film support, means for guiding the film with relation to the take-up sprocket, a beater engaging the stretch of film between the take-up sprocket and the lower end of the film support, and means for bodily shifting the take-up sprocket and the guiding means toward and away from the beater.

22. The combination in a moving picture machine provided with an exposure opening, and means for guiding the film past the exposure opening, of a beater located below said guiding means and arranged to engage the film after it leaves the guiding means, a take-up sprocket located in rear of the beater, arranged to take up and hold the film advanced by said beater, and means for bodily shifting the take-up sprocket with relation to the beater without substantially varying the angle of the film at any definite point in the cycle of the machine, extending from the beater to the take-up sprocket.

23. The combination in a moving picture machine provided with an exposure opening, of means for intermittently advancing the film past the exposure opening, a take-up sprocket arranged to take up the film advanced by the intermittent film advancing means, means for guiding the film with relation to the take-up sprocket, and means for bodily shifting the take-up sprocket and the guiding means with respect to the intermittent film advancing means.

24. The combination in a moving picture machine, of film advancing means, a pivoted arm, a take-up sprocket mounted on said arm, means for guiding the film with relation to the sprocket also mounted on said arm, means for adjusting the arm upon its pivot to shift the take-up sprocket and the guiding means with respect to the film advancing means, and means for rotating the take-up sprocket irrespective of its adjusted position.

25. The combination in a moving picture machine, of means for intermittently ad-

opening whereby to maintain the uniformity of tension exerted upon the film by the retarding device.

3. The combination in a moving picture machine provided with an exposure opening, of a take-up device for taking up an equal amount of film once to each cycle of the machine, a retarding device exerting a substantially uniform tension on the film, and a beater movable to and fro and acting upon the film to intermittently advance the same past the exposure opening, the said beater having a bodily movement in the direction of movement of the film past the exposure opening so as to present no additional sliding resistance to the passage of the film.

4. The combination in a moving picture machine provided with an exposure opening, of a take-up device for taking up an equal amount of film once to each cycle of the machine, a retarding device exerting a substantially uniform tension on the film, and a beater movable to and fro and acting upon the film to intermittently advance the same past the exposure opening, the said beater having a bodily movement in the direction of movement of the film so as to present no additional sliding resistance to the passage of the film and further arranged to advance the film without substantially deflecting it from the path in which it is guided by the retarding device, whereby the tension exerted upon the film by the retarding device will be maintained substantially uniform irrespective of the action of the beater.

5. The combination in a moving picture machine, of means for guiding the film in a predetermined path, a beater movable in a substantially undeflected path and acting on the film to advance the film on a line forming a substantial continuation of the path in which the film is guided, and means for operating the beater.

6. The combination in a moving picture machine, of means for guiding the film in a substantially straight path, a pivoted beater acting on the film, and having a film engaging part arranged to move in a substantially straight line, said beater arranged to advance the film in a substantially straight line, forming a substantial continuation of the path in which the film is guided, and means for operating the beater.

7. Film advancing mechanism for moving picture machines comprising means for guiding the film in a straight line path, a pivoted beater acting on the film and arranged during a portion of the movement around its pivotal center to exert a pull on the film in a substantially straight line in alinement with the guiding means, and means for operating the beater about its pivotal center.

8. In a moving picture machine, the combination with a film support provided with a plane surface over which the film is guided, of a pivoted beater located to one side of the film support and having a part adapted to move substantially in a plane and to engage the film issuing from said support, the said beater arranged to exert a pull on the film substantially in continuance of the plane of the support, and means for operating the beater.

9. Film advancing mechanism for moving picture machines comprising a beater arm extending forwardly from a given center, a pivotal support for the beater arm eccentrically disposed with respect to the said center, and means for rocking the beater arm upon the pivotal support.

10. The combination in a moving picture machine provided with an exposure opening, of means for guiding the film in a predetermined path past the exposure opening, and means for intermittently advancing the film in a line forming a substantial continuation of the path in which the film is guided, comprising a beater extending from a given center forwardly toward the path of the film, a pivotal support for the beater offset eccentrically with respect to the center aforesaid, and means for oscillating the beater about the center of pivotal support.

11. Film advancing mechanism for moving picture machines comprising an upper member extending forwardly from a given center, a lower member spaced from the upper member and extending rearwardly from the given center, a pivotal support for said members offset eccentrically with respect to the center aforesaid, and means for rocking the members about the pivotal support.

12. In a moving picture machine, the combination with means for guiding the film in a predetermined path, of means for intermittently advancing the film in substantially a continuation of the same path, comprising a beater pivoted at one end and having its free end curved to exert a substantially straight pull on the film during a portion of the movement of the beater, and means for oscillating the beater about its pivotal center.

13. In a moving picture machine, the combination with means for guiding the film in a predetermined path, of means for intermittently advancing the film in a substantial continuation of the same path, comprising a beater extending forwardly from a given center and terminating in a film engaging portion curved to exert a straight pull on the film during a portion of the movement of the beater, a pivot supporting the beater and offset eccentrically with respect to the center aforesaid, and means for oscillating the beater about its pivotal center.

14. Film advancing means for moving

picture machines comprising a rock shaft, a supporting member carried at one end of the rock-shaft and eccentrically disposed with respect to the same, a film-engaging plate secured to the supporting member, and means for oscillating the rock shaft.

15. Film advancing means for moving picture machines comprising a rock shaft, a pair of spaced supporting members eccentrically carried at one end of the rock shaft, a film engaging plate secured to one of the supporting members and extending forwardly from the same, a film-engaging plate secured to the other supporting member and extending rearwardly from the same, and means for oscillating the rock shaft.

16. Film advancing means for moving picture machines comprising a pivoted support, a forwardly-extending film-engaging plate carried by the pivoted support, a fulcrum carried by the pivoted support and located in rear of and below the film-engaging plate so as to support the film while it is being acted upon by the film-engaging plate, and means for oscillating the pivoted support, the fulcrum being mounted eccentrically upon the pivoted support so as to move during the active portion of the stroke in the direction of movement of the film.

17. Film advancing means for moving picture machines comprising a pivoted support, means for oscillating the pivoted support, a film-engaging plate carried by the pivoted support constructed and arranged during a portion of its stroke to advance the film in a relatively straight path, and a fulcrum carried by the pivoted support, arranged to support the film while it is being acted upon by the film-engaging plate and having during the active stroke of the film-engaging plate, a bodily movement in the direction of movement of the film.

18. The combination in a moving picture machine provided with an exposure opening, of a take-up device, means for guiding the film with relation to the take-up device, a beater interposed between the exposure opening and the take-up device for intermittently advancing the film past the exposure opening, and means for bodily shifting the take-up device and the guiding means to adjust the film with respect to the exposure opening.

19. The combination with a moving picture machine provided with an exposure opening, of a beater for intermittently advancing the film past the exposure opening, a combined guide and take-up over which the film passes after leaving the beater, and means for shifting the combined guide and take-up with respect to the beater to adjust the film with relation to the exposure opening.

20. The combination in a moving picture machine provided with an exposure opening, of means for guiding the film past the exposure opening, a take-up device spaced from the guiding means aforesaid, means for guiding the film with relation to the take-up device, a beater arranged to act on the stretch of film between the guiding means and the take-up device and the coöperating guiding means, and means for bodily shifting the take-up device with respect to the beater to adjust the film with relation to the exposure opening.

21. In a moving picture machine, the combination with a film support provided with an exposure opening, a take-up sprocket at the lower end of the film support, means for guiding the film with relation to the take-up sprocket, a beater engaging the stretch of film between the take-up sprocket and the lower end of the film support, and means for bodily shifting the take-up sprocket and the guiding means toward and away from the beater.

22. The combination in a moving picture machine provided with an exposure opening, and means for guiding the film past the exposure opening, of a beater located below said guiding means and arranged to engage the film after it leaves the guiding means, a take-up sprocket located in rear of the beater, arranged to take up and hold the film advanced by said beater, and means for bodily shifting the take-up sprocket with relation to the beater without substantially varying the angle of the film at any definite point in the cycle of the machine, extending from the beater to the take-up sprocket.

23. The combination in a moving picture machine provided with an exposure opening, of means for intermittently advancing the film past the exposure opening, a take-up sprocket arranged to take up the film advanced by the intermittent film advancing means, means for guiding the film with relation to the take-up sprocket, and means for bodily shifting the take-up sprocket and the guiding means with respect to the intermittent film advancing means.

24. The combination in a moving picture machine, of film advancing means, a pivoted arm, a take-up sprocket mounted on said arm, means for guiding the film with relation to the sprocket also mounted on said arm, means for adjusting the arm upon its pivot to shift the take-up sprocket and the guiding means with respect to the film advancing means, and means for rotating the take-up sprocket irrespective of its adjusted position.

25. The combination in a moving picture machine, of means for intermittently advancing the film, a film feeding roll adjacent the intermittent film advancing means, means for guiding the film with relation to

the roll, and means for bodily shifting the film feeding roll and the guiding means with respect to the intermittent film advancing means.

26. In a moving picture machine, the combination with a film support provided with an exposure opening therein, a beater located below the film support for intermittently advancing the film past the exposure opening, a film feeding roll located in rear of the beater, means for guiding the film with relation to the roll, an adjustable arm on which the film feeding roll and the guiding means are mounted, and means for shifting the said arm to carry the film engaged by the roll toward or away from the beater.

27. The combination in a moving picture machine provided with an exposure opening, of a beater located below the exposure opening, a combined framing and take-up sprocket, a pivoted arm on which the said sprocket is mounted, means for shifting said arm to adjust the sprocket with relation to the beater, means for rotating the sprocket irrespective of its adjusted position, and releasable means also carried on the pivoted arm for holding the film in engagement with the sprocket.

28. The combination in a moving picture machine, of a pivoted arm, a driving gear concentric with the pivot on which said arm is mounted, a film-engaging sprocket carried on the free end of the arm, a gear carried by the sprocket engaging at all times with the driving gear aforesaid, means for guiding the film with relation to the sprocket also carried by the arm, and means for securing the pivoted arm in adjusted position.

29. The combination in a moving picture machine, of a supporting frame provided with a hub, an arm pivotally engaged on said hub, a driving gear concentric with the hub, a film engaging sprocket mounted on the free end of the adjustable arm, a gear carried by said sprocket in engagement with the driving gear, means for guiding the film with relation to the sprocket also mounted on the arm and means for securing the arm in adjusted position upon the hub.

30. The combination in a moving picture machine, of a supporting frame provided with a hub, an arm having a split portion pivotally engaged upon the hub, a driving gear concentric with the hub, a film-engaging sprocket mounted on the free end of the arm, a gear carried by said sprocket engaging the driving gear aforesaid, and a clamping screw engaging the split portions of the arm for clamping the same in adjusted position upon the hub.

31. The combination in a moving picture machine, of a film support over which the film is guided, a beater below the film support, and a guide arranged to engage the outer face of the film and extending from the lower edge of the film support to a point substantially in line with the beater.

32. The combination in a moving picture machine, of a film support over which the film is guided, a beater below the film support, and clamping shoes bearing upon the film passing across the face of the film support, the said clamping shoes projecting downwardly from the lower edge of the film support to a point substantially in line with the beater.

33. The combination in a moving picture machine, of a film support over which the film is guided in a substantially straight path, a dependent guide overhanging the lower edge of the film support for directing the film downward in a substantial continuation of the path in which the film is guided, a beater below the film support arranged to advance the film in a line forming a substantial continuation of the path in which the film is guided, and means for operating the beater.

Signed at New York city, in the county of New York, and State of New York, this 17th day of September, A. D. 1912.

JAMES A. CAMERON.

Witnesses:
LOUISA E. SIMSON,
AXEL V. BEEKER.

1128

I. LANGMUIR.

METHOD OF AND MEANS FOR CONTROLLING ELECTRIC CURRENTS OR POTENTIALS.

APPLICATION FILED FEB. 5, 1914.

1,273,627. Patented July 23, 1918

Fig. 1.

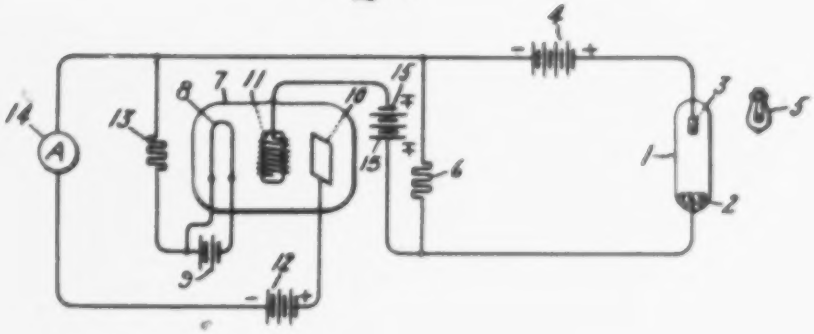

Fig. 2

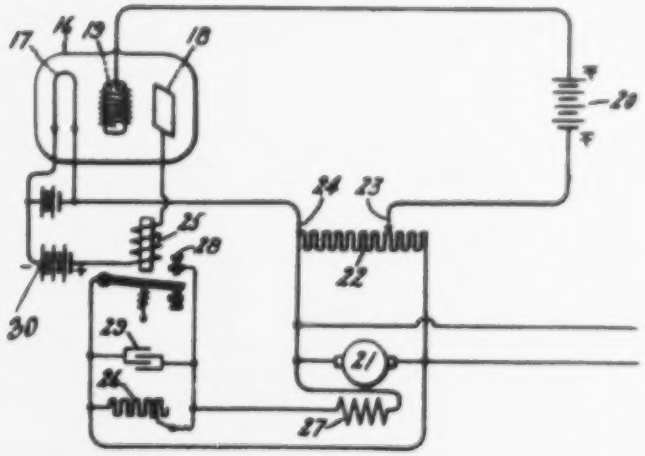

Fig. 3.

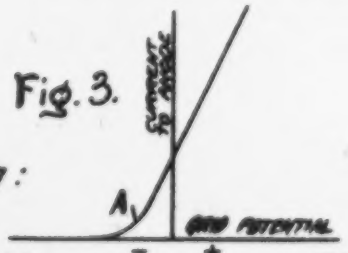

WITNESSES:
J. Ellis Glen
Anthony Wurt

INVENTOR:
IRVING LANGMUIR,
BY Albert G. Davis
HIS ATTORNEY.

UNITED STATES PATENT OFFICE.

IRVING LANGMUIR, OF SCHENECTADY, NEW YORK, ASSIGNOR TO GENERAL ELECTRIC COMPANY, A CORPORATION OF NEW YORK.

METHOD OF AND MEANS FOR CONTROLLING ELECTRIC CURRENTS OR POTENTIALS.

1,273,627. Specification of Letters Patent. Patented July 23, 1918.

Application filed February 5, 1914. Serial No. 816,236.

To all whom it may concern:

Be it known that I, IRVING LANGMUIR, a citizen of the United States, residing at Schenectady, county of Schenectady, State of New York, have invented certain new and useful Improvements in Methods of and Means for Controlling Electric Currents or Potentials, of which the following is a specification.

My present invention relates to means for controlling and regulating electric currents or potentials. I employ various and diverse agencies in such a way that variations of potential or current of one circuit are utilized to produce desired changes in the potential or current of another circuit suitably coupled with the first.

In one modification this effect may be employed in a system for controlling the value of a direct current of constant or slowly varying amplitude in the second circuit by means of a current of the same nature in the first circuit, in contra-distinction to the large class of devices which are in common use and which accomplish this result only in the case of alternating currents or pulsating direct currents.

In another modification variations in the potential of a source of electromotive force are utilized to produce variations in the current flow from another source. The variable current flow thus produced may be utilized in turn to operate suitable regulating means to maintain a constant potential in the first source.

In carrying my invention into effect I make use of some form of electron discharge apparatus arranged in coöperative relation with the source of potential or current which is to be controlled or regulated. I am not limited to the use of any particular form of electron discharge apparatus.

In the accompanying drawings in which Figure 1 shows diagrammatically one way in which my invention may be utilized for the amplification of electric currents, Fig. 2 shows a second modification thereof adapted to the operation of a constant potential regulator, and Fig. 3 shows a characteristic current curve of an electron discharge device which may be employed.

3. A battery 4 is placed in circuit with this cell and the current which passes through the cell when exposed to the influence of a light source 5 is caused to flow through the high resistance 6. In conjunction with this source of small currents I employ an electron discharge tube 7 comprising a cathode 8 of filamentary form provided with means for heating, consisting of a battery 9, an anode 10 and a conducting body 11 in the form of a grid interposed between the cathode and the anode. In circuit with the cathode and anode is placed a battery or other source of current 12 and a resistance 13, the value of which bears a given ratio to that of the resistance 6. In this circuit I may also place a suitable measuring instrument 14 for the purpose of measuring the amplified current.

The curve shown in Fig. 3 illustrates the relation between current between cathode and anode and grid potential in an electron discharge device which is suitable for my purpose. From this it will be seen that with a certain negative potential on the grid no appreciable current will flow between the electrodes. As this negative potential becomes less, current starts to flow and increases with decrease in the negative potential. Beyond a point A the curve becomes a straight line, that is, the change in current is directly proportional to the change in the grid potential and small changes in the grid potential produce large changes in the current.

Considering now the system shown in Fig. 1 and assuming that no current is flowing through the photo-electric cell 1, if current flows through the tube 7 there will be a drop of potential through the resistance 13 and this will cause the grid 11 to become negative with respect to the cathode 8. The greater the current the greater the drop in potential in the resistance 13 and the greater the difference in potential between the grid and cathode. Thus as the current increases the grid becomes more negative until a current value is reached at which further increase is prevented by the negative potential on the grid. The circuit should preferably

METHOD OF AND MEANS FOR CONTROLLING ELECTRIC CURRENTS OR POTENTIALS.

APPLICATION FILED FEB. 5, 1914.

1,273,627. Patented July 23, 1918

Fig. 1.

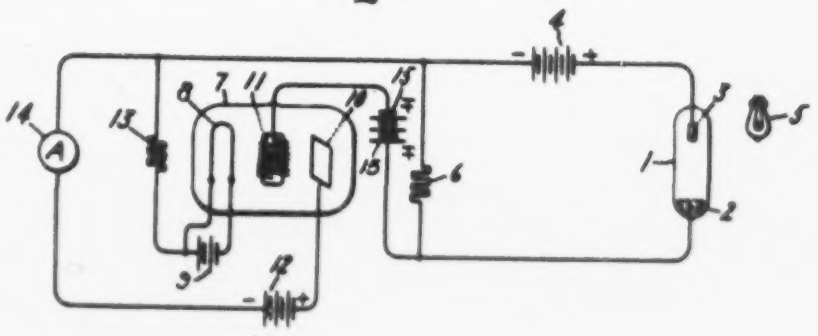

Fig. 2

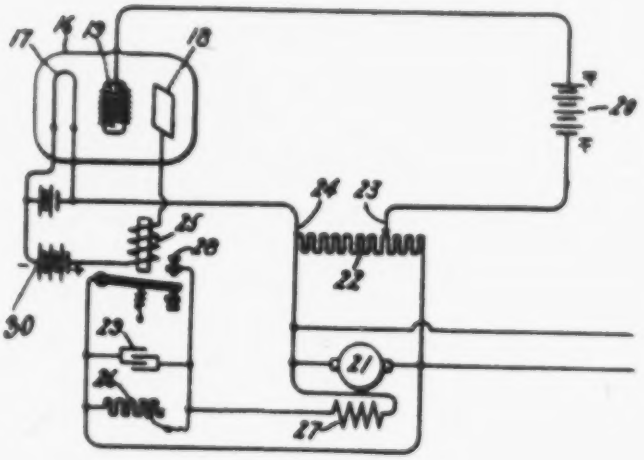

Fig. 3.

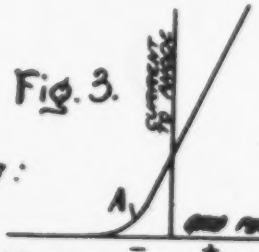

WITNESSES:

J. Ellis Glen

Anthony Wait

INVENTOR:

IRVING LANGMUIR,

BY Albert G. Davis

HIS ATTORNEY.

IRVING LANGMUIR, OF SCHENECTADY, NEW YORK, ASSIGNOR TO GENERAL ELECTRIC COMPANY, A CORPORATION OF NEW YORK.

METHOD OF AND MEANS FOR CONTROLLING ELECTRIC CURRENTS OR POTENTIALS.

1,273,627. Specification of Letters Patent. Patented July 23, 1918.

Application filed February 5, 1914. Serial No. 816,836.

To all whom it may concern:

Be it known that I, IRVING LANGMUIR, a citizen of the United States, residing at Schenectady, county of Schenectady, State of New York, have invented certain new and useful Improvements in Methods of and Means for Controlling Electric Currents or Potentials, of which the following is a specification.

My present invention relates to means for controlling and regulating electric currents or potentials. I employ various and diverse agencies in such a way that variations of potential or current of one circuit are utilized to produce desired changes in the potential or current of another circuit suitably coupled with the first.

In one modification this effect may be employed in a system for controlling the value of a direct current of constant or slowly varying amplitude in the second circuit by means of a current of the same nature in the first circuit, in contra-distinction to the large class of devices which are in common use and which accomplish this result only in the case of alternating currents or pulsating direct currents.

In another modification variations in the potential of a source of electromotive force are utilized to produce variations in the current flow from another source. The variable current flow thus produced may be utilized in turn to operate suitable regulating means to maintain a constant potential in the first source.

In carrying my invention into effect I make use of some form of electron discharge apparatus arranged in coöperative relation with the source of potential or current which is to be controlled or regulated. I am not limited to the use of any particular form of electron discharge apparatus.

In the accompanying drawings in which Figure 1 shows diagrammatically one way in which my invention may be utilized for the amplification of electric currents, Fig. 2 shows a second modification thereof adapted to the operation of a constant potential regulator, and Fig. 3 shows a characteristic current curve of an electron discharge device which may be employed.

1 indicates a photo-electric cell having a cathode 2 of sodium, potassium or other metal which gives off electrons when subjected to the influence of light, and an anode 3. A battery 4 is placed in circuit with this cell and the current which passes through the cell when exposed to the influence of a light source 5 is caused to flow through the high resistance 6. In conjunction with this source of small currents I employ an electron discharge tube 7 comprising a cathode 8 of filamentary form provided with means for heating, consisting of a battery 9, an anode 10 and a conducting body 11 in the form of a grid interposed between the cathode and the anode. In circuit with the cathode and anode is placed a battery or other source of current 12 and a resistance 13, the value of which bears a given ratio to that of the resistance 6. In this circuit I may also place a suitable measuring instrument 14 for the purpose of measuring the amplified current.

The curve shown in Fig. 3 illustrates the relation between current between cathode and anode and grid potential in an electron discharge device which is suitable for my purpose. From this it will be seen that with a certain negative potential on the grid no appreciable current will flow between the electrodes. As this negative potential becomes less, current starts to flow and increases with decrease in the negative potential. Beyond a point A the curve becomes a straight line, that is, the change in current is directly proportional to the change in the grid potential and small changes in the grid potential produce large changes in the current.

Considering now the system shown in Fig. 1 and assuming that no current is flowing through the photo-electric cell 1, if current flows through the tube 7 there will be a drop of potential through the resistance 13 and this will cause the grid 11 to become negative with respect to the cathode 8. The greater the current the greater the drop in potential in the resistance 13 and the greater the difference in potential between the grid and cathode. Thus as the current increases the grid becomes more negative until a current value is reached at which further increase is prevented by the negative potential on the grid. The circuit should preferably be so adjusted that this value of the current will be small but will fall upon the straight portion of the current curve at some value above that represented by the point A. In order to keep the current in the tube at the

value desired it may sometimes be necessary to employ a battery 15 to impose an extra potential on the grid 11 though if the tube is properly designed this may not be necessary.

If now current starts to flow through the photo-electric cell there will be a drop in potential through the high resistance 6 and this difference of potential will oppose that through the resistance 13; that is, the potential of the grid 11 will become less negative or positive with respect to that of the cathode 8. As a result more current will flow through the tube. This increased current in turn causes an increased drop in potential through resistance 13. A point is finally reached at which further increase in current is limited by the grid potential. When this point is reached the increase in the drop through resistance 13 is substantially equal to the drop through the resistance 6 and the increase in current through resistance 13 will bear a fixed ratio to the current through resistance 6, which ratio is approximately the same as the ratio between the resistances. Assume for example that the drop through resistance 6 is 25 volts. If the current curve of the device were perfectly vertical the current through resistance 13 would increase until the drop therethrough had increased 25 volts so that the grid potential would be the same as before. Since, however, the current curve has a certain slant the current may increase only to a point where the increased drop through resistance 13 is 24 volts, making the grid 11 one volt less negative or more positive than before. It will be apparent that the ratio between the current through resistance 6 and the increase in current through resistance 13 will be substantially the same as the ratio of resistance 13 to the resistance 6. If now the current through the photo-electric cell is increased so that the drop through resistance 6 increases to 50 volts the current through resistance 13 will increase until the drop therethrough has increased 48 volts from what it was originally and the grid will be two volts less negative or more positive than before. It will be apparent that there will be the same proportionality between the two currents as before and that this ratio will remain the same as long as the current falls on the straight portion of the curve.

If the system is to be used for photometric purposes the measuring device 14 may be calibrated to read directly in candle power or any suitable unit desired. It will of course be understood that this form of my sources. It will also be apparent that many modifications of the system shown may be made without departing from the scope of my invention.

While my invention as illustrated in Fig. 1 is especially suitable for the amplification of feeble currents the principle involved in carrying it into effect may equally well be applied to the operation of a device for constant potential regulation. In Fig. 2 I have illustrated an organization whereby such a result may be accomplished. In this case I provide an electron discharge tube 16 with the usual cathode 17 and anode 18, and in circuit with the grid 19 of this tube may be connected two equal and opposing sources of electromotive force. The first of these, 20, consists preferably of a battery of standard cells the electromotive force of which is constant. The second source of electromotive force is the generator 21, the potential of which it is desired to maintain at a constant value. It may be desirable in some cases to use enough standard cells so that the constant electromotive force of the source 20 is substantially equal to the electromotive force of the generator 21. If this is not expedient, however, a resistance 22 may be connected across the terminals of the generator and a portion of this resistance shunted in such a way that the drop of potential between the shunt connections 23 and 24 is normally equal to the electromotive force of the source 20. As long as the drop in potential through the shunted resistance is equal to the electromotive force of the source 20 the current flow through the plate circuit of the electron discharge tube from a battery 30 will be constant. As soon, however, as this drop in potential varies there will be a change in the potential of the grid 19 with respect to the cathode 17. If the positive pole of battery 20 is connected to the grid more or less current will flow in the plate circuit of the tube according as to whether the drop of potential decreases or increases. If the negative pole of battery 20 is connected to the grid, an increase in the electromotive force of the generator will cause an increase in the plate current and vice versa. While it is not necessary that the electromotive force of the battery 20 should have the same value as the drop of potential in the shunted resistance 22, it should preferably have very nearly the same value in order that the grid 19 may normally be at substantially zero potential. In this case variations in the voltage of the generator 21 above or below normal produce corresponding positive or negative poten-

preciably greater or less than that of the normal potential drop through the shunted resistance 22 the grid 19 would normally have an appreciable voltage impressed thereon and the effect of small voltage variations of the generator 21 would be much less proportionally than before. This current variation may readily be caused to operate upon any suitable regulating means by means of a relay 25 in the plate circuit of the tube.

While my invention is not limited to any particular form of regulating device, I have indicated one simple way in which the regulation of the generator may be accomplished. A variable resistance 26 is normally in series with the shunt field 27 of the generator 21. The apparatus is so arranged, however, that when the voltage of the generator falls below the desired value the current through the plate circuit of the electron discharge tube increases, enabling the relay 25 to pick up its armature and make contact with the upper stop 28, thereby short circuiting all of the resistance and thus increasing the field strength of the generator. A condenser 29 may be connected across the relay contacts to prevent sparking when the relay drops its armature, by reason of the increase in voltage of the generator and the corresponding decrease in the current in the plate circuit.

What I claim as new and desire to secure by Letters Patent of the United States, is:—

1. The combination of an electron discharge tube having therein a cathode, an anode and a conducting grid, two sources of electromotive force connected in opposition to each other in an external circuit between the grid and the cathode, and means cooperating therewith whereby the two forces are maintained substantially equal to each other.

2. The combination of an electron discharge tube having therein a cathode, an anode and a conducting grid, two sources of electromotive force connected in opposition to each other in an external circuit between the grid and the cathode, and means cooperating therewith rendered operative by a change in one of the electromotive forces whereby the two forces are maintained substantially equal to each other.

3. The method of operating an electron discharge device comprising a cathode, anode and conducting grid which consists in causing current to flow in an external circuit between the anode and cathode of said device, applying two substantially equal and opposing potentials to the conducting grid, varying one of the potentials and utilizing [illegible]

tional electric currents, comprising an electron discharge tube having grid and plate circuits, a resistance which is included in both of said circuits, and means coöperating therewith whereby an increase of current is produced in the plate circuit of an amount substantially equal to a given multiple of the value of the current to be amplified.

5. Means for amplifying small electric currents, comprising an electron discharge tube, a resistance in series therewith, and means coöperating with the tube and resistance to cause an increase in current flowing through the tube, which increase bears a predetermined definite ratio to the current which is to be amplified, which ratio is substantially independent of the operating characteristic of the tube.

6. Means for amplifying small electric currents, comprising an electron discharge tube and a resistance in series therewith, a second resistance through which the current to be amplified may be caused to flow, and means coöperating with the tube and resistances to cause an increase in the current flowing through the tube having a ratio to the current to be amplified substantially equal to the ratio of the second resistance to the first.

7. Photometric means comprising a photoelectric cell and an amplifying device electrically associated with and coöperating therewith whereby an increase in a normally small current in said device is produced of an amount equal to a given multiple of the value of the current flowing through the photoelectric cell.

8. Photometric means comprising a photoelectric cell, an electron discharge tube and means electrically associated with and coöperating therewith whereby an increase in current is produced in the tube of an amount equal to a given multiple of the value of the current in the photoelectric cell.

9. Means for amplifying small electric currents comprising an electron discharge tube, a resistance through which the current to be amplified may be caused to flow, and means coöperating with the resistance and the tube whereby an increase in current is produced in the tube of an amount equal to a predetermined given multiple of the value of the current to be amplified, which multiple is substantially independent of the operating characteristic of the tube.

10. Means for amplifying small electric currents comprising an electron discharge device having grid and plate circuits, a resistance which is included in both of said circuits, and a second resistance through

value desired it may sometimes be necessary to employ a battery 15 to impose an extra potential on the grid 11 though if the tube is properly designed this may not be necessary.

If now current starts to flow through the photo-electric cell there will be a drop in potential through the high resistance 6 and this difference of potential will oppose that through the resistance 13; that is, the potential of the grid 11 will become less negative or positive with respect to that of the cathode 8. As a result more current will flow through the tube. This increased current in turn causes an increased drop in potential through resistance 13. A point is finally reached at which further increase in current is limited by the grid potential. When this point is reached the increase in the drop through resistance 13 is substantially equal to the drop through the resistance 6 and the increase in current through resistance 13 will bear a fixed ratio to the current through resistance 6, which ratio is approximately the same as the ratio between the resistances. Assume for example that the drop through resistance 6 is 25 volts. If the current curve of the device were perfectly vertical the current through resistance 13 would increase until the drop therethrough had increased 25 volts so that the grid potential would be the same as before. Since, however, the current curve has a certain slant the current may increase only to a point where the increased drop through resistance 13 is 24 volts, making the grid 11 one volt less negative or more positive than before. It will be apparent that the ratio between the current through resistance 6 and the increase in current through resistance 13 will be substantially the same as the ratio of resistance 13 to the resistance 6. If now the current through the photo-electric cell is increased so that the drop through resistance 6 increases to 50 volts the current through resistance 13 will increase until the drop therethrough has increased 48 volts from what it was originally and the grid will be two volts less negative or more positive than before. It will be apparent that there will be the same proportionality between the two currents as before and that this ratio will remain the same as long as the current falls on the straight portion of the curve.

If the system is to be used for photometric purposes the measuring device 14 may be calibrated to read directly in candle power or any suitable unit desired. It will of course be understood that this form of my invention is by no means limited to the measuring of currents derived from the photo-electric cell but will be useful in many cases for amplifying or measuring small electrical currents derived from other sources. It will also be apparent that many modifications of the system shown may be made without departing from the scope of my invention.

While my invention as illustrated in Fig. 1 is especially suitable for the amplification of feeble currents the principle involved in carrying it into effect may equally well be applied to the operation of a device for constant potential regulation. In Fig. 2 I have illustrated an organization whereby such a result may be accomplished. In this case I provide an electron discharge tube 16 with the usual cathode 17 and anode 18, and in circuit with the grid 19 of this tube may be connected two equal and opposing sources of electromotive force. The first of these, 20, consists preferably of a battery of standard cells the electromotive force of which is constant. The second source of electromotive force is the generator 21, the potential of which it is desired to maintain at a constant value. It may be desirable in some cases to use enough standard cells so that the constant electromotive force of the source 20 is substantially equal to the electromotive force of the generator 21. If this is not expedient, however, a resistance 22 may be connected across the terminals of the generator and a portion of this resistance shunted in such a way that the drop of potential between the shunt connections 23 and 24 is normally equal to the electromotive force of the source 20. As long as the drop in potential through the shunted resistance is equal to the electromotive force of the source 20 the current flow through the plate circuit of the electron discharge tube from a battery 30 will be constant. As soon, however, as this drop in potential varies there will be a change in the potential of the grid 19 with respect to the cathode 17. If the positive pole of battery 20 is connected to the grid more or less current will flow in the plate circuit of the tube according as to whether the drop of potential decreases or increases. If the negative pole of battery 20 is connected to the grid, an increase in the electromotive force of the generator will cause an increase in the plate current and vice versa. While it is not necessary that the electromotive force of the battery 20 should have the same value as the drop of potential in the shunted resistance 22, it should preferably have very nearly the same value in order that the grid 19 may normally be at substantially zero potential. In this case variations in the voltage of the generator 21 above or below normal produce corresponding positive or negative potentials on the grid 19 and a small change of potential will cause a large variation in the current flowing through the plate circuit of the tube. If, however, the value of the electromotive force of the battery 20 was ap-

previously greater or less than that of the normal potential drop through the shunted resistance 22 the grid 19 would normally have an appreciable voltage impressed thereon and the effect of small voltage variations of the generator 21 would be much less proportionally than before. This current variation may readily be caused to operate upon any suitable regulating means by means of a relay 25 in the plate circuit of the tube.

While my invention is not limited to any particular form of regulating device, I have indicated one simple way in which the regulation of the generator may be accomplished. A variable resistance 26 is normally in series with the shunt field 27 of the generator 21. The apparatus is so arranged, however, that when the voltage of the generator falls below the desired value the current through the plate circuit of the electron discharge tube increases, enabling the relay 25 to pick up its armature and make contact with the upper stop 28, thereby short circuiting all of the resistance and thus increasing the field strength of the generator. A condenser 29 may be connected across the relay contacts to prevent sparking when the relay drops its armature, by reason of the increase in voltage of the generator and the corresponding decrease in the current in the plate circuit.

What I claim as new and desire to secure by Letters Patent of the United States, is:—

1. The combination of an electron discharge tube having therein a cathode, an anode and a conducting grid, two sources of electromotive force connected in opposition to each other in an external circuit between the grid and the cathode, and means cooperating therewith whereby the two forces are maintained substantially equal to each other.

2. The combination of an electron discharge tube having therein a cathode, an anode and a conducting grid, two sources of electromotive force connected in opposition to each other in an external circuit between the grid and the cathode, and means cooperating therewith rendered operative by a change in one of the electromotive forces whereby the two forces are maintained substantially equal to each other.

3. The method of operating an electron discharge device comprising a cathode, anode and conducting grid which consists in causing current to flow in an external circuit between the anode and cathode of said device, applying two substantially equal and opposing potentials to the conducting grid, varying one of the potentials and utilizing the resulting current variations in the external circuit to maintain the two potentials substantially equal to each other.

4. Means for amplifying small unidirectional electric currents, comprising an electron discharge tube having grid and plate circuits, a resistance which is included in both of said circuits, and means coöperating therewith whereby an increase of current is produced in the plate circuit of an amount substantially equal to a given multiple of the value of the current to be amplified.

5. Means for amplifying small electric currents, comprising an electron discharge tube, a resistance in series therewith, and means coöperating with the tube and resistance to cause an increase in current flowing through the tube, which increase bears a predetermined definite ratio to the current which is to be amplified, which ratio is substantially independent of the operating characteristic of the tube.

6. Means for amplifying small electric currents, comprising an electron discharge tube and a resistance in series therewith, a second resistance through which the current to be amplified may be caused to flow, and means coöperating with the tube and resistances to cause an increase in the current flowing through the tube having a ratio to the current to be amplified substantially equal to the ratio of the second resistance to the first.

7. Photometric means comprising a photoelectric cell and an amplifying device electrically associated with and coöperating therewith whereby an increase in a normally small current in said device is produced of an amount equal to a given multiple of the value of the current flowing through the photoelectric cell.

8. Photometric means comprising a photoelectric cell, an electron discharge tube and means electrically associated with and cooperating therewith whereby an increase in current is produced in the tube of an amount equal to a given multiple of the value of the current in the photoelectric cell.

9. Means for amplifying small electric currents comprising an electron discharge tube, a resistance through which the current to be amplified may be caused to flow, and means coöperating with the resistance and the tube whereby an increase in current is produced in the tube of an amount equal to a predetermined given multiple of the value of the current to be amplified, which multiple is substantially independent of the operating characteristic of the tube.

10. Means for amplifying small electric currents comprising an electron discharge device having grid and plate circuits, a resistance which is included in both of said circuits, and a second resistance through which the current to be amplified may be caused to flow, and which is also included in said grid circuit.

11. Means for amplifying small electric currents comprising an electron discharge

device having grid and plate circuits, a resistance which is included in both of said circuits, and a second resistance, through which the current to be amplified is caused to flow, said second resistance being included in the grid circuit in such a way that the drop in potential between its terminals opposes the drop in potential between the terminals of the first resistance when current is flowing therein.

12. Means for amplifying small electric currents comprising an electron discharge device having grid and plate circuits, a resistance which is included in both of said circuits, and a second resistance through which the current to be amplified may be caused to flow and which is also included in said grid circuit, said resistances being so related to each other that when the current to be amplified flows through the second resistance it will cause an increase in current through the first resistance of an amount equal to a given multiple of the value of the current to be amplified.

13. An electrical amplifying system comprising an electron discharge device having an incandescent cathode, an anode and a grid inclosed in an evacuated envelop, an external circuit connecting said cathode and said anode, a second external circuit connecting said cathode and said grid, means for impressing potential variations produced by the current to be amplified upon the second circuit and connections for impressing upon the second circuit potential variations produced by current changes in the first circuit, said connections being so arranged that the two sets of potential variations act in opposition to each other.

14. Means for amplifying electric currents comprising an electron discharge device having grid and plate circuits, means for impressing upon the grid circuit potential variations produced by the current to be amplified and a coupling between the two circuits whereby potential variations produced by changes in the current in the plate circuit act in opposition to the potential variations impressed upon the grid circuit by means of the current to be amplified.

15. Means for amplifying electric currents comprising an electron discharge device having a cathode adapted to be heated to incandescence, an anode and a grid inclosed in an evacuated receptacle, an external circuit connecting the cathode and grid, means for impressing a potential upon this circuit which is produced by the current to be amplified, and a second external circuit connecting the cathode and anode, and an ohmic resistance which is common to both circuits whereby current changes in the second circuit are effective in producing potential variations in the first circuit.

16. Means for amplifying small unidirectional currents comprising an electron discharge device having plate and grid circuits and an ohmic resistance included in the grid circuit through which the unidirectional current to be amplified is caused to flow.

17. The method of operating an electron discharge device comprising a cathode, anode and conducting grid which consists in causing current to flow in an external circuit between the anode and cathode of said device, and causing a small unidirectional current which is to be amplified to flow through an ohmic resistance which is included in an external circuit between the cathode and grid of said device.

In witness whereof I have hereunto set my hand this 4th day of February, 1914.

IRVING LANGMUIR.

Witnesses:
WILLIAM C. WHITE,
BENJAMIN B. HULL.

H. H. MOMYER.

MOVING PICTURE PROJECTOR.

APPLICATION FILED OCT. 27, 1915.

1,317,450.

Patented Sept. 30, 1919.

2 SHEETS—SHEET 1.

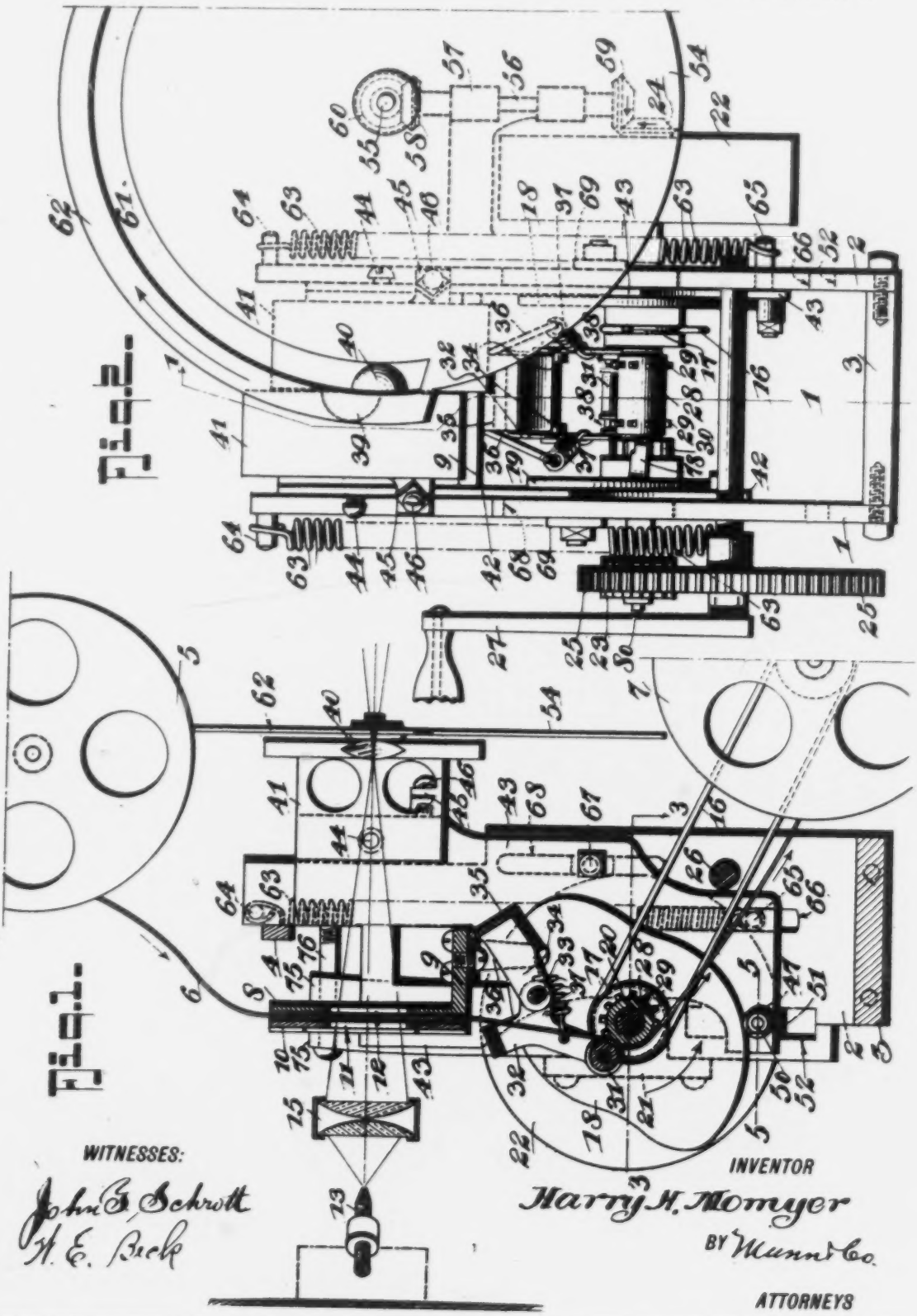

Fig. 2.

Fig. 1.

WITNESSES:

John G. Schrott

H. E. Beck

INVENTOR

Harry H. Momyer

BY Munn & Co.

ATTORNEYS

H. H. MOMYER.

MOVING PICTURE PROJECTOR.

APPLICATION FILED OCT. 27, 1915.

1,317,450.

Patented Sept. 30, 1919.

2 SHEETS—SHEET 2.

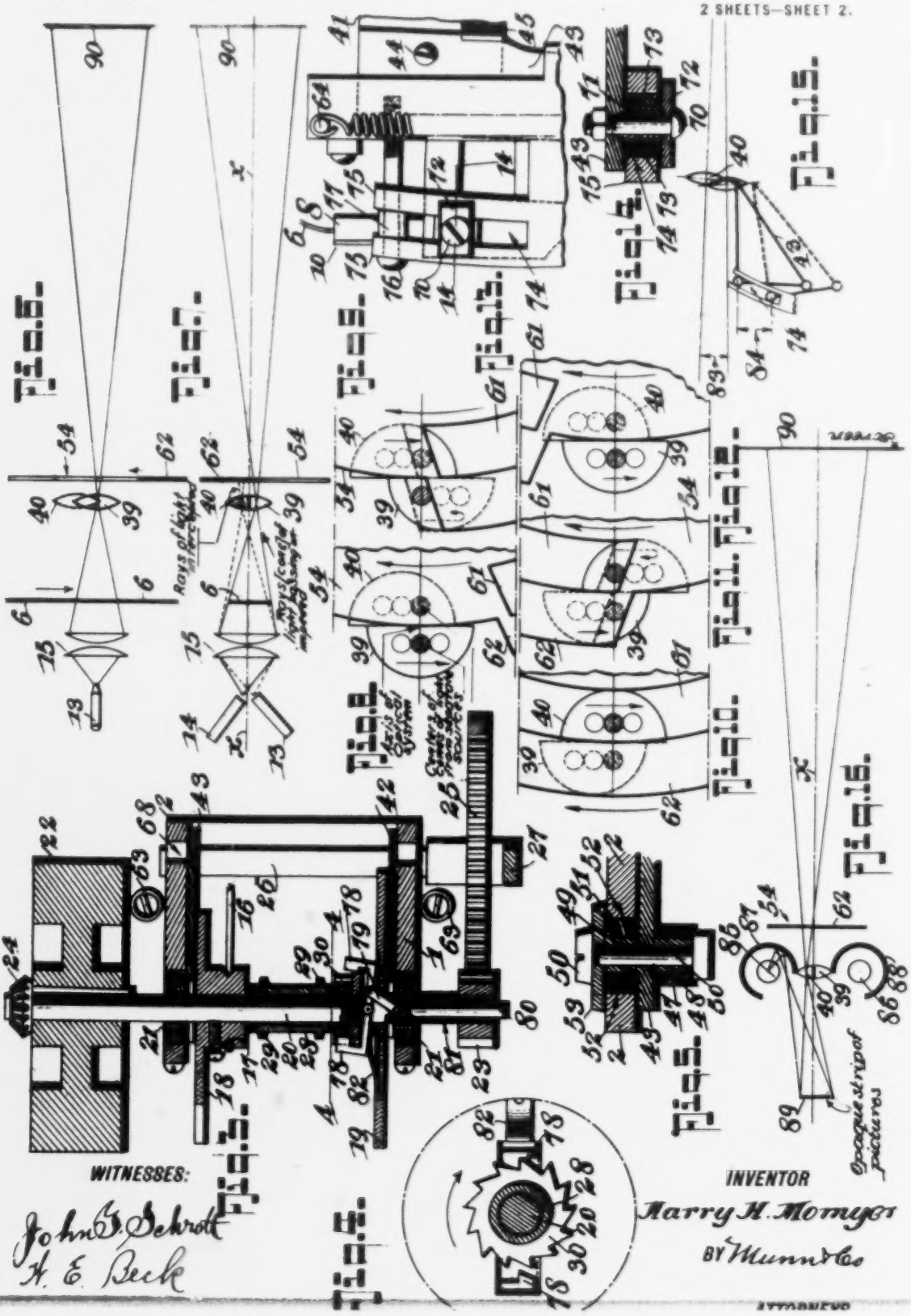

WITNESSES:

John D. Schrott

H. E. Beck

INVENTOR

Harry H. Momyer

BY Munn & Co

UNITED STATES PATENT OFFICE.

HARRY H. MOMYER, OF DODGE CITY, KANSAS.

MOVING-PICTURE PROJECTOR.

1,317,450. Specification of Letters Patent. Patented Sept. 30, 1919.

Application filed October 27, 1915. Serial No. 58,139.

To all whom it may concern:

Be it known that I, HARRY H. MOMYER, a citizen of the United States, and a resident of Dodge City, in the State of Kansas, have invented a new and useful Improvement in Moving-Picture Projectors, of which the following is a specification.

This invention is an improvement in an apparatus for projecting moving pictures and consists in certain novel constructions, combinations and arrangements of parts that will hereinafter be described and claimed.

The principal object of the invention is to provide a device in which there is a two-part lens, one half of which is adapted to be covered while the other half which performs the function of a whole lens being uncovered, is adapted to travel with the continuously moving film and at the same speed during such an interval of time in which one picture may be projected onto the screen. At the end of this time interval, the thin covered lens is uncovered and the next image on the film is exposed and projected onto the screen the effect being to dissolve one picture into the other and thus eliminate flickering of the picture.

Another object of the invention is to provide a motion picture projector having a source of light including horizontally disposed alternating current arc light carbons each having a crater, the two craters constituting two light spots which in effect are the apices of cones of light, the light spots being focused on the optical centers of a pair of half lenses.

Another object consists in the provision of a cam drive for each lens so that the lens exposed to the rays of light is made to travel at the same speed as the film is traveling, the same cam being cut in such manner as to permit the lens to return to its starting place when the lens becomes covered and the opposite lens is uncovered.

Another object lies in the provision of a guide which causes the exposed lens to move a proportional distance with the film so as to keep the lens at right angles with the rays of light and to keep the projected image centered on the screen.

Other objects of the invention will appear in the following description [illegible]

Fig. 3 is a cross section on line 3—3 of Fig. 1.

Fig. 4 is a section on line 4—4 on Fig. 3.

Fig. 5 is a section on line 5—5 on Fig. 1.

Figs. 6 and 7 are diagrammatic views hereinafter described.

Figs. 8, 9, 10, 11 and 12 are diagrammatic views hereinafter described.

Fig. 13 is a detail view of the upper lens guide.

Fig. 14 is a section on line 14—14 on Fig. 13.

Fig. 15 is a diagrammatic view hereinafter described.

Fig. 16 is a diagrammatic view of a modification.

In the drawings, the supporting frame of the device consists of two side plates 1 and 2 which are spaced apart by a bottom plate 3 and a spacer or brace 4 at the top, the distance that the plates 1 and 2 are spaced apart being sufficient for the assembling of the working mechanism of the device, within them.

Mounted on a suitable support above the frame, is a film reel 5 from which the film strip 6 is unwound onto a take-up reel 7 which is mounted on a suitable support near the bottom of the frame as shown in Fig. 1. The film 6 passes through a straight film guide 8 which is secured to the frame side plates 1 and 2 by a foot 9 which extends laterally and is bolted into place as shown. A door 10 is hinged at one side of the guide 8, which when opened admits of placing the film in position, light openings 11 and 12 being provided in the door and the film guide through which the light passes from the carbons 13 and 14 to project the image from the film 6 onto the screen 90 (see Figs. 6 and 7). A condenser lens 15 concentrates the rays of light from the carbons 13 and 14 through the film on the projection lens, hereinafter to be described, the condenser 15 being located between the source of light and the film as shown in Figs. 1, 6 and 7.

The take-up reel 7 is driven by a belt 16 which receives its motion from a grooved pulley 17 which is formed on the hub of a cam 18 this cam being similar in shape to another cam 19 on the opposite side of the

MOVING PICTURE PROJECTOR.

APPLICATION FILED OCT. 27, 1915.

1,317,450.

Patented Sept. 30, 1919.

2 SHEETS—SHEET 2.

WITNESSES:

John G. Schmidt

H. E. Beck

INVENTOR

Harry M. Momyer

BY Munn & Co

ATTORNEYS

HARRY H. MOMYER, OF DODGE CITY, KANSAS.

MOVING-PICTURE PROJECTOR.

1,317,450. Specification of Letters Patent. Patented Sept. 30, 1919.

Application filed October 27, 1915. Serial No. 58,139.

To all whom it may concern:

Be it known that I, HARRY H. MOMYER, a citizen of the United States, and a resident of Dodge City, in the State of Kansas, have invented a new and useful Improvement in Moving-Picture Projectors, of which the following is a specification.

This invention is an improvement in an apparatus for projecting moving pictures and consists in certain novel constructions, combinations and arrangements of parts that will hereinafter be described and claimed.

The principal object of the invention is to provide a device in which there is a two-part lens, one half of which is adapted to be covered while the other half which performs the function of a whole lens being uncovered, is adapted to travel with the continuously moving film and at the same speed during such an interval of time in which one picture may be projected onto the screen. At the end of this time interval, the thin covered lens is uncovered and the next image on the film is exposed and projected onto the screen the effect being to dissolve one picture into the other and thus eliminate flickering of the picture.

Another object of the invention is to provide a motion picture projector having a source of light including horizontally disposed alternating current arc light carbons each having a crater, the two craters constituting two light spots which in effect are the apices of cones of light, the light spots being focused on the optical centers of a pair of half lenses.

Another object consists in the provision of a cam drive for each lens so that the lens exposed to the rays of light is made to travel at the same speed as the film is traveling, the same cam being cut in such manner as to permit the lens to return to its starting place when the lens becomes covered and the opposite lens is uncovered.

Another object lies in the provision of a guide which causes the exposed lens to move a proportional distance with the film so as to keep the lens at right angles with the rays of light and to keep the projected image centered on the screen.

Other objects of the invention will appear in the following description the mechanism being illustrated in the accompanying drawings, in which—

Figure 1 is a vertical section through the device.

Fig. 2 is a front elevation thereof.

Fig. 3 is a cross section on line 3—3 of Fig. 1.

Fig. 4 is a section on line 4—4 on Fig. 3.

Fig. 5 is a section on line 5—5 on Fig. 1.

Figs. 6 and 7 are diagrammatic views hereinafter described.

Figs. 8, 9, 10, 11 and 12 are diagrammatic views hereinafter described.

Fig. 13 is a detail view of the upper lens guide.

Fig. 14 is a section on line 14—14 on Fig. 13.

Fig. 15 is a diagrammatic view hereinafter described.

Fig. 16 is a diagrammatic view of a modification.

In the drawings, the supporting frame of the device consists of two side plates 1 and 2 which are spaced apart by a bottom plate 3 and a spacer or brace 4 at the top, the distance that the plates 1 and 2 are spaced apart being sufficient for the assembling of the working mechanism of the device, within them.

Mounted on a suitable support above the frame, is a film reel 5 from which the film strip 6 is unwound onto a take-up reel 7 which is mounted on a suitable support near the bottom of the frame as shown in Fig. 1. The film 6 passes through a straight film guide 8 which is secured to the frame side plates 1 and 2 by a foot 9 which extends laterally and is bolted into place as shown. A door 10 is hinged at one side of the guide 8, which when opened admits of placing the film in position, light openings 11 and 12 being provided in the door and the film guide through which the light passes from the carbons 13 and 14 to project the image from the film 6 onto the screen 90 (see Figs. 6 and 7). A condenser lens 15 concentrates the rays of light from the carbons 13 and 14 through the film on the projection lens, hereinafter to be described, the condenser 15 being located between the source of light and the film as shown in Figs. 1, 6 and 7.

The take-up reel 7 is driven by a belt 16 which receives its motion from a grooved pulley 17 which is formed on the hub of a cam 18 this cam being similar in shape to another cam 19 on the opposite side of the machine as shown in Fig. 2. The cams 18 and 19 are secured to and are in consequence rotated by a driven shaft 20 which is mounted in suitable bearings 21 in the side plates 1 and 2 as shown in Fig. 4.

The shaft 20 extends laterally beyond the

frame a fly-wheel 22 being mounted on one end and a pinion 23 on the other a bevel pinion 24 being fixed on the shaft 20 adjacent the fly-wheel. A drive-gear 25 which is mounted on a shaft 26, meshes with the pinion 23 which is rotated when the operating handle 27 on the shaft 26, is turned the shaft 26 being suitably mounted in bearings on the side plates 1 and 2.

The film 6 in passing from the guide 8 to the take-up reel 7, passes over a double sprocket wheel 28 which has sprocket teeth 29 at each end the purpose of the teeth 29 being to engage the sprocket holes on each side of the commercial picture film and pull it through the guide after which it is wound on the reel 7.

The sprocket 28 is loosely mounted on the shaft 20 but is caused to travel with the shaft at the same speed, by a pawl and ratchet device the ratchet 30 being an integral part of the sprocket as shown in Fig. 3.

The film 6 is held into engagement with the sprocket by a roller 31 which is mounted on a cross shaft in the lower arms of a frame 32 these arms being connected by a bridge at the top as shown in Fig. 1. The arms 32 have forwardly extending ears which are pivotally mounted on a rod 33 the rod being held in the depending arms 34 of the frame support 35. The support 35 is secured beneath the lateral portion 9 of the guide 8 and has diagonally extending arms 36 on each side which are apertured to receive one end of a coiled spring 37. The spring 37 is also joined with the adjacent arm 32 of the roller frame and serves to hold the roller 31 against the film 6 so that there will be no likelihood of the film becoming disengaged from the sprocket. The roller 31 has grooves 38 at each end (see Fig. 2) which correspond in depth to the height of the teeth 29 of the sprocket, enabling the roller to readily move with the film.

The pictures on the film 6 are projected onto a screen 90 (see Figs. 6 and 7) through a projection lens which is divided on its vertical center so that the halves of the lens may be reciprocated vertically independently of each other. One of the halves is indicated by 39, the other by 40 each of the half lens being suitably mounted in a lens holder 41 each being of like construction.

Each lens holder 41 is mounted on a lens carrier plate 42 and 43 by a screw 44 which forms a means of securing the holder to the carrier plate and also as a fulcrum when it becomes necessary to adjust the lenses. Each lens holder has a diagonally projecting ear 45 near its lower edge in which an adjusting screw 46 is threaded the ends of

When either lens holder 41 is to be shifted to aline the focal plane of that lens 39 or 40 to a true right angular relationship with the axis of the optical system, then the screw 46 is adjusted against the edge of the carrier plate to which adjustment the screw is held by a lock nut.

The film 6 travels past the light openings 11 and 12 (see Fig. 1) at a uniform and relatively low speed, the speed being such that approximately but four separate images on the film pass the light openings in the duration of one second of time in contradistinction to the rapidly and intermittently moving film in machines of the types now known in which sixteen pictures are moved past the light opening in the same interval of time. The latter types of machines embody a fixed lens and the film moves a head one picture at a time, the shutter cutting off the light from the screen while the change takes place and since this occurs sixteen times per second, as above stated, an annoying "flicker" is caused which I avoid with my device.

In my machine each of the half lens 39 and 40 travels with the film at the same speed as the film for three-fourths of the time interval taken for the projection of one picture the remaining quarter of the same time interval being consumed in returning the lens to its original position and dissolving the one picture into the next.

Thus it will be seen that the film has a constant motion and each lens returns to position and projects alternate pictures.

The lens 39 and 40 are moved up and down by the cams 18 and 19 and by referring to Fig. 1 it will be seen that the cam 18 which is similar to 19 is a double one having two opposite high places as well as low places. The cam 18 engages a roller 47 which is mounted on a collar 48 which with a similar collar 49 is mounted on a bolt 50 (see Fig. 5) the collars 48 and 49 serving as clamping members and spacers for the roller 47 and a sliding block 51 which moves in a slot 52 in the side plates 1 or 2. The collars 48 and 49 are clamped against the faces of the lens carrier 43 as shown in Fig. 5, a washer 53 being placed under the head of the bolt 50 to prevent the block 51 from slipping from the slot 52.

As the cam rotates in the direction of the arrow in Fig. 1 lens carrier 43 will be moved downwardly, the lens 40 being carried with it. In Fig. 1 the cam 18 has carried the lens 40 through one half of its downward travel the lens being now positioned on the optical axis as shown in Figs. 2 and 11, the picture on the film 6 being now projected through this lens 40 onto the screen. When the lens is centered on the optical axis as shown in Fig. 11 it will have traveled two-fourths of

being projected, is dissolved into the next picture through the lens 39.

The pictures are dissolved one into the other by a circular shutter 54. This shutter is mounted on a shaft 55 which is supported in suitable bearings. The shutter is rotated in the direction of the arrow in Fig. 2 by a shaft 56 which is mounted in a bearing 57 and has bevel pinions 58 and 59 on its upper and lower ends respectively. The pinion 58 meshes with a similar pinion 60 on the shutter shaft 55 while on the pinion 59 meshes with the pinion 24 on the shaft 20 from which motion is derived.

The normal periphery of the shutter coincides with the division line of the half lenses as shown in Figs. 2 and 8, a slot 61 being formed in the shutter below the periphery, an enlargement 62 being formed above the periphery, the slot and enlargement extending approximately over one half of the circumference of the shutter. When the picture is being projected through the lens 40 and the slot 61, as explained above and when the lens, completes its travel and reaches the bottom of its stroke then at that moment the lens 40 is covered by the body of the shutter 54 and the lens 39 is uncovered by the enlargement 62 the next picture on the film being then thrown onto the screen. The dissolving of one picture into the other in the manner just described is rendered possible since each half of the lens is constantly projecting pictures but their position is so regulated that both pictures center on the screen, the dissolving shutter cutting the light from the lower picture on the film off, as the upper picture comes into position.

The rollers 47 of the lens carriers 42 and 43 are held against the cams 18 and 19 by springs 63 which are hooked over a stud 64 at the top of frame, and another stud 65 which projects from each one of the lens carriers 42 and 43 through slots 66 in the side plates.

The lens carriers are guided in a vertical movement by bolts 67 which are secured to each carrier and pass loosely through slots 68 in the side plates 1 and 2. A washer 69 is fitted on the bolt against the outer face of each side plate and the washer is held in place by a suitable nut as shown in Fig. 2. The lens carriers are further guided by a bolt 70 of which there is one for each carrier.

The bolt 70 passes through a collar 71, a washer 72 and the body of the lens carrier, the collar 71 being clamped between the washer 72 and the lens carrier when the nut on the bolt is tightened (see Fig. 14). A block 73 is mounted on the collar 71 and slides in the slot 74 formed by the [illegible]

at the same speed as the film this travel being caused by the action of the respective cams on the respective lens carrier. In order that the picture may not shift its position on the screen as the lens and film move, a curved guide has been provided for the lens which will keep the picture centered on the screen.

The curved guide consists of the two arms 75 which are apertured at the top for the passage of an adjusting screw 76 which is threaded into the body of the side plate. A collar 77 is fitted on the screw 76 between the arms 75 to preserve the space 74; as the screw 76 is turned inwardly the arms 75 are bent to the desirable degree which then forms the curved guide for the block 73 on the upper end of the lens carrier. Thus by passing the film 6 through a straight guide 8 causing the roller 47 against which the cam operates to move in a straight vertical plane and by curving the edge against which the upper end of the lens carrier is guided, sufficient swing is given the lens to keep it at a true right angular relationship between the moving film and the center of the lens. By tightening or loosening the screw 76 the arms 75 may be bent to give them more or less curvature which will effect a rocking motion on the lens to a greater or lesser degree as may be required. The shift of the lenses 39 and 40 is scarcely perceptible but is illustrated in Fig. 15 in which 83 designates the relatively small movement of the center of the lens in comparison with the greater movement 84 of the lens carrier.

The "framing" of the picture on the screen is accomplished through the use of the ratchet 30 on the sprocket 28 with which ratchet 30 a double pawl 78 coöperates. The pawl 78 is pivoted in a slotted portion of the shaft 20 a link 79 being connected to the pawl adjacent the pivot, the link being connected to a push rod 80 which slides in an opening 81 in the shaft 20 and extends beyond the shaft so as to be accessible by the operator. A leaf spring 82 presses the pawl 78 in one direction so that one of its teeth always engages the teeth of the ratchet 30 as shown in Fig. 3.

If the projected picture is not centered on the screen or in alinement with the then exposed lens, it may be properly centered or "framed" by pressing on the rod 80 which will allow the ratchet 30 to be moved backwardly or forwardly as desired.

Since an alternating current is used to form the arc between the separated carbons 13 and 14 the ends of the carbons remain substantially flat or form into shallow crater shapes at the ends. These craters virtually

[illegible]

end and a pinion 23 on the other a bevel pinion 24 being fixed on the shaft 20 adjacent the fly-wheel. A drive-gear 25 which is mounted on a shaft 26, meshes with the pinion 23 which is rotated when the operating handle 27 on the shaft 26, is turned the shaft 26 being suitably mounted in bearings on the side plates 1 and 2.

The film 6 in passing from the guide 8 to the take-up reel 7, passes over a double sprocket wheel 28 which has sprocket teeth 29 at each end the purpose of the teeth 29 being to engage the sprocket holes on each side of the commercial picture film and pull it through the guide after which it is wound on the reel 7.

The sprocket 28 is loosely mounted on the shaft 20 but is caused to travel with the shaft at the same speed, by a pawl and ratchet device the ratchet 30 being an integral part of the sprocket as shown in Fig. 3.

The film 6 is held into engagement with the sprocket by a roller 31 which is mounted on a cross shaft in the lower arms of a frame 32 these arms being connected by a bridge at the top as shown in Fig. 1. The arms 32 have forwardly extending ears which are pivotally mounted on a rod 33 the rod being held in the depending arms 34 of the frame support 35. The support 35 is secured beneath the lateral portion 9 of the guide 8 and has diagonally extending arms 36 on each side which are apertured to receive one end of a coiled spring 37. The spring 37 is also joined with the adjacent arm 32 of the roller frame and serves to hold the roller 31 against the film 6 so that there will be no likelihood of the film becoming disengaged from the sprocket. The roller 31 has grooves 38 at each end (see Fig. 2) which correspond in depth to the height of the teeth 29 of the sprocket, enabling the roller to readily move with the film.

The pictures on the film 6 are projected onto a screen 90 (see Figs. 6 and 7) through a projection lens which is divided on its vertical center so that the halves of the lens may be reciprocated vertically independently of each other. One of the halves is indicated by 39, the other by 40 each of the half lens being suitably mounted in a lens holder 41 each being of like construction.

Each lens holder 41 is mounted on a lens carrier plate 42 and 43 by a screw 44 which forms a means of securing the holder to the carrier plate and also as a fulcrum when it becomes necessary to adjust the lenses. Each lens holder has a diagonally projecting ear 45 near its lower edge in which an adjusting screw 46 is threaded the ends of the screw 46 having bearing against the edge of that lens carrier plate which it adjoins. to aline the focal plane of that lens 39 or 40 to a true right angular relationship with the axis of the optical system, then the screw 46 is adjusted against the edge of the carrier plate to which adjustment the screw is held by a lock nut.

The film 6 travels past the light openings 11 and 12 (see Fig. 1) at a uniform and relatively low speed, the speed being such that approximately but four separate images on the film pass the light openings in the duration of one second of time in contradistinction to the rapidly and intermittently moving film in machines of the types now known in which sixteen pictures are moved past the light opening in the same interval of time. The latter types of machines embody a fixed lens and the film moves a head one picture at a time, the shutter cutting off the light from the screen while the change takes place and since this occurs sixteen times per second, as above stated, an annoying "flicker" is caused which I avoid with my device.

In my machine each of the half lens 39 and 40 travels with the film at the same speed as the film for three-fourths of the time interval taken for the projection of one picture the remaining quarter of the same time interval being consumed in returning the lens to its original position and dissolving the one picture into the next.

Thus it will be seen that the film has a constant motion and each lens returns to position and projects alternate pictures.

The lens 39 and 40 are moved up and down by the cams 18 and 19 and by referring to Fig. 1 it will be seen that the cam 18 which is similar to 19 is a double one having two opposite high places as well as low places. The cam 18 engages a roller 47 which is mounted on a collar 48 which with a similar collar 49 is mounted on a bolt 50 (see Fig. 5) the collars 48 and 49 serving as clamping members and spacers for the roller 47 and a sliding block 51 which moves in a slot 52 in the side plates 1 or 2. The collars 48 and 49 are clamped against the faces of the lens carrier 43 as shown in Fig. 5, a washer 53 being placed under the head of the bolt 50 to prevent the block 51 from slipping from the slot 52.

As the cam rotates in the direction of the arrow in Fig. 1 lens carrier 43 will be moved downwardly, the lens 40 being carried with it. In Fig. 1 the cam 18 has carried the lens 40 through one half of its downward travel the lens being now positioned on the optical axis as shown in Figs. 2 and 11, the picture on the film 6 being now projected through this lens 40 onto the screen. When the lens is centered on the optical axis as shown in Fig. 11 it will have traveled two-fourths of its stroke there being yet one-fourth of the stroke to be traveled before the picture now

being projected, is dissolved into the next picture through the lens 39.

The pictures are dissolved one into the other by a circular shutter 54. This shutter is mounted on a shaft 55 which is supported in suitable bearings. The shutter is rotated in the direction of the arrow in Fig. 2 by a shaft 56 which is mounted in a bearing 57 and has bevel pinions 58 and 59 on its upper and lower ends respectively. The pinion 58 meshes with a similar pinion 60 on the shutter shaft 55 while on the pinion 59 meshes with the pinion 24 on the shaft 20 from which motion is derived.

The normal periphery of the shutter coincides with the division line of the half lenses as shown in Figs. 2 and 8, a slot 61 being formed in the shutter below the periphery, an enlargement 62 being formed above the periphery, the slot and enlargement extending approximately over one half of the circumference of the shutter. When the picture is being projected through the lens 40 and the slot 61, as explained above and when the lens, completes its travel and reaches the bottom of its stroke then at that moment the lens 40 is covered by the body of the shutter 54 and the lens 39 is uncovered by the enlargement 62 the next picture on the film being then thrown onto the screen. The dissolving of one picture into the other in the manner just described is rendered possible since each half of the lens is constantly projecting pictures but their position is so regulated that both pictures center on the screen, the dissolving shutter cutting the light from the lower picture on the film off, as the upper picture comes into position.

The rollers 47 of the lens carriers 42 and 43 are held against the cams 18 and 19 by springs 63 which are hooked over a stud 64 at the top of frame, and another stud 65 which projects from each one of the lens carriers 42 and 43 through slots 66 in the side plates.

The lens carriers are guided in a vertical movement by bolts 67 which are secured to each carrier and pass loosely through slots 68 in the side plates 1 and 2. A washer 69 is fitted on the bolt against the outer face of each side plate and the washer is held in place by a suitable nut as shown in Fig. 2. The lens carriers are further guided by a bolt 70 of which there is one for each carrier.

The bolt 70 passes through a collar 71, a washer 72 and the body of the lens carrier, the collar 71 being clamped between the washer 72 and the lens carrier when the nut on the bolt is tightened (see Fig. 14). A block 73 is mounted on the collar 71 and slides in the slot 74 formed by the semi-resilient arms 75 which may be a portion of the side plates 1 and 2. As before stated, each lens when exposed, travels downwardly at the same speed as the film this travel being caused by the action of the respective cams on the respective lens carrier. In order that the picture may not shift its position on the screen as the lens and film move, a curved guide has been provided for the lens which will keep the picture centered on the screen.

The curved guide consists of the two arms 75 which are apertured at the top for the passage of an adjusting screw 76 which is threaded into the body of the side plate. A collar 77 is fitted on the screw 76 between the arms 75 to preserve the space 74; as the screw 76 is turned inwardly the arms 75 are bent to the desirable degree which then forms the curved guide for the block 73 on the upper end of the lens carrier. Thus by passing the film 6 through a straight guide 8 causing the roller 47 against which the cam operates to move in a straight vertical plane and by curving the edge against which the upper end of the lens carrier is guided, sufficient swing is given the lens to keep it at a true right angular relationship between the moving film and the center of the lens. By tightening or loosening the screw 76 the arms 75 may be bent to give them more or less curvature which will effect a rocking motion on the lens to a greater or lesser degree as may be required. The shift of the lenses 39 and 40 is scarcely perceptible but is illustrated in Fig. 15 in which 83 designates the relatively small movement of the center of the lens in comparison with the greater movement 84 of the lens carrier.

The "framing" of the picture on the screen is accomplished through the use of the ratchet 30 on the sprocket 28 with which ratchet 30 a double pawl 78 coöperates. The pawl 78 is pivoted in a slotted portion of the shaft 20 a link 79 being connected to the pawl adjacent the pivot, the link being connected to a push rod 80 which slides in an opening 81 in the shaft 20 and extends beyond the shaft so as to be accessible by the operator. A leaf spring 82 presses the pawl 78 in one direction so that one of its teeth always engages the teeth of the ratchet 30 as shown in Fig. 3.

If the projected picture is not centered on the screen or in alinement with the then exposed lens, it may be properly centered or "framed" by pressing on the rod 80 which will allow the ratchet 30 to be moved backwardly or forwardly as desired.

Since an alternating current is used to form the arc between the separated carbons 13 and 14 the ends of the carbons remain substantially flat or form into shallow crater shapes at the ends. These craters virtually form two sources of light.

This same idea is substantially carried out by the use of separate sources of light 85 and 86 as shown in the modified form in

Fig. 16. The light from the lamps 85 and 86 is reflected by curved reflectors 87 and 88 onto an opaque picture strip 89 from which the pictures are projected by the same shutter device as described and illustrated for the principal form. It will be seen that when the lens 39 is covered by the part 62 of the shutter, then only the rays of light reflected from the reflector 87 are projected onto the screen 90.

Having thus described the mechanism, the manner in which it operates is as follows:

The carbons 13 and 14 of the arc light are adjusted to a distance of about one-eighth of an inch apart the light being transmitted, through the condenser lens 15 and film 6, to the projection lenses 39 and 40. The carbon sticks are arranged horizontally as shown in Fig. 7 each carbon lying at either side of the horizontal center line x, the crater shaped ends of the opposing carbons constituting theoretically separate sources of light the rays of which are gathered by the condenser 15, and transmitted to that lens which happens to be uncovered by the dissolving shutter 54, at the time. The rays of light from each carbon converge at a point at the center of each lens as shown in Fig. 7, in which the rays or "cone" of light is shown as coming to a point at the lens 39.

After adjusting the carbons as described, the lens holders 41 are adjusted on their pivots 44 in such manner that the rays of light projected by both lenses will coincide on the screen, this adjustment being accomplished by the screws 46.

Let it be assumed that an image on the film 6 is just coming into proper registration with the light openings in the fixed guide 8 the dissolving shutter moving upwardly and just about to dissolve the new picture into the previous one on the film. At this time the light from the carbon 13 is passing through the lens 39 which has reached the limit of its three-fourths travel but is still projecting the picture on the screen.

Now when the next picture comes into view the enlargement 62 of the shutter will gradually cover up the lens 39 as the opening 61 uncovers the lens 40. This position of parts is clearly shown in Fig. 9 from which it will also be noticed that the act of covering the lens 39 simultaneously uncovers the lens 40 which is at the top of its stroke and beginning to move downwardly as indicated by the arrow. The darkened area on the lens 40 indicates where the new picture is being projected through the lens by the light from the carbon 14.

The lens 40 is now traveling downwardly at the same speed as the film 6 is traveling, the screen 90 since the lens carrier 18 receives its downwardly curved movement by means of the guide 75 as previously explained.

The lens 39 does not immediately return, however as soon as the lens 40 is uncovered as shown in Fig. 9, and as previously described, but the lens 39 travels with the film until the dissolving of the one picture into the next, through the lens 40, is completed. The shutter at this time will have reached the dotted line position shown in Fig. 9 at which time the optical axis of the lens 39 will have been covered while that of the lens 40, uncovered; it is now that the lens 39 returns as indicated by the arrow. The lens 39 in turn moves from its upper position after the lens 40 completes the projection of the then registering picture in the manner explained.

As soon as the lens 40 has traveled three-fourths of its downward stroke, the change takes place as indicated in Fig. 11 from which it will be seen that the lens 39 is about to move and project the next picture from the film onto the screen and while the dissolving effect as previously described, takes place, the lens 40 returns to the normal position in readiness for the succeeding picture, as shown in Fig. 12.

From the foregoing description it will be recalled that the reciprocation of the lenses 39 and 40 is effected by the action of the cams 42 and 43 on the lens carriers 18 and 19.

The use of the separated carbons constituting two sources of light makes the device, virtually two machines which alternately project pictures from a single standard film, the substitution of the ratchet release device 30—78 forming an improved manner of "framing" the picture, over the common use of the tilting frame below the table.

I claim:—

1. In a motion picture projector, a vertically split lens providing a half lens on each side of the physical axis, each half lens being operated as a whole lens, and a source of light including alternating current electric light carbons disposed in a horizontal plane, the crater of each carbon being optically centered with the companion half lens on the opposite side of the physical axis.

2. In a motion picture projector, an optical system including a vertically split lens, providing two half lenses, each lens being operated as a whole lens, a condenser, and an alternating current electric light behind the condenser including horizontally disposed carbons having craters constituting in effect the apices of cones of light, said condenser, and each of the craters and half lenses on diagonally opposite sides of the physical

for continuously moving a film, an alternating current electric light behind the film including horizontally disposed carbons having craters on each side of the physical axis, and constituting in effect the apices of cones of light, a half lens on each side of the physical axis and optically centered with the companion carbon, said half lenses projecting alternate pictures on the film, a shutter for covering the half lenses alternately and means for simultaneously imparting a downward stroke to one of the lenses to move it with the film, and shifting the focal plane of said lens while the other half lens is covered.

4. In a motion picture projector, a half part projection lens located at each side of a physical axis in front of a film arranged to pass through the projector, lens carriers for the half lenses, means for alternately moving the lens carriers in a vertical plane, and guide means coöperating with said carriers for shifting the focal plane of each lens with and in proportion to the movement of the film, including means for adjusting said guide means to vary the amount of shifting of the focal planes.

5. In a motion picture projector, a frame, a lens carrier, means for reciprocating the lens carrier, a lens mounted on the carrier, means carried by the frame for guiding the lens carrier, including resilient arms projecting from the frame, a sliding member mounted on the lens carrier and extending between the arms, and an adjusting screw threaded into the frame adapted to curve the arms and tilt the lens carrier to shift the focal plane of the lens as the lens carrier is reciprocated.

6. In a motion picture projector, the combination of a frame, lens carriers mounted on the frame, a lens holder having a lens, pivotally mounted on each carrier, an ear projected laterally from each holder, said ear having a threaded aperture, and an adjusting screw in the aperture in engagement with the adjacent edge of the lens carrier.

7. In a motion picture projector, a supporting frame having slots, a lens carrier at each side of the frame having slide blocks movable in said frame slots, rollers on the lens carriers, a drive shaft mounted in said frame, double cams mounted on each shaft and engaging the rollers on the lens carriers, and means for forcing contact of the rollers with the cams.

8. In a motion picture projector, the combination with a frame, of a shaft mounted on the frame and having an operating handle and gear, a driving shaft mounted on the frame and having a pinion in mesh with the gear, a fly wheel and a bevel pinion mounted on the opposite end of the drive shaft, a dissolving shutter having a bevel pinion, an intermediate shaft connection between the shutter and the drive shaft, a film take-up reel having a pulley, a pulley mounted on the drive shaft, and a connecting belt between the drive shaft and reel pulleys.

HARRY H. MOMYER.

Witnesses:
F. A. Moses,
F. E. Brown.

86 is reflected by curved reflectors 87 and 88 onto an opaque picture strip 89 from which the pictures are projected by the same shutter device as described and illustrated for the principal form. It will be seen that when the lens 39 is covered by the part 62 of the shutter, then only the rays of light reflected from the reflector 87 are projected onto the screen 90.

Having thus described the mechanism, the manner in which it operates is as follows:

The carbons 13 and 14 of the arc light are adjusted to a distance of about one-eighth of an inch apart the light being transmitted, through the condenser lens 15 and film 6, to the projection lenses 39 and 40. The carbon sticks are arranged horizontally as shown in Fig. 7 each carbon lying at either side of the horizontal center line x, the crater shaped ends of the opposing carbons constituting theoretically separate sources of light the rays of which are gathered by the condenser 15, and transmitted to that lens which happens to be uncovered by the dissolving shutter 54, at the time. The rays of light from each carbon converge at a point at the center of each lens as shown in Fig. 7, in which the rays or "cone" of light is shown as coming to a point at the lens 39.

After adjusting the carbons as described, the lens holders 41 are adjusted on their pivots 44 in such manner that the rays of light projected by both lenses will coincide on the screen, this adjustment being accomplished by the screws 46.

Let it be assumed that an image on the film 6 is just coming into proper registration with the light openings in the fixed guide 8 the dissolving shutter moving upwardly and just about to dissolve the new picture into the previous one on the film. At this time the light from the carbon 13 is passing through the lens 39 which has reached the limit of its three-fourths travel but is still projecting the picture on the screen.

Now when the next picture comes into view the enlargement 62 of the shutter will gradually cover up the lens 39 as the opening 61 uncovers the lens 40. This position of parts is clearly shown in Fig. 9 from which it will also be noticed that the act of covering the lens 39 simultaneously uncovers the lens 40 which is at the top of its stroke and beginning to move downwardly as indicated by the arrow. The darkened area on the lens 40 indicates where the new picture is being projected through the lens by the light from the carbon 14.

The lens 40 is now traveling downwardly at the same speed as the film 6 is traveling, the lens virtually "carrying" the picture from the film, with it. It should be understood that the picture remains centered on the screen 90 since the lens carrier 18 receives its downwardly curved movement by means of the guide 75 as previously explained.

The lens 39 does not immediately return, however as soon as the lens 40 is uncovered as shown in Fig. 9, and as previously described, but the lens 39 travels with the film until the dissolving of the one picture into the next, through the lens 40, is completed. The shutter at this time will have reached the dotted line position shown in Fig. 9 at which time the optical axis of the lens 39 will have been covered while that of the lens 40, uncovered; it is now that the lens 39 returns as indicated by the arrow. The lens 39 in turn moves from its upper position after the lens 40 completes the projection of the then registering picture in the manner explained.

As soon as the lens 40 has traveled three-fourths of its downward stroke, the change takes place as indicated in Fig. 11 from which it will be seen that the lens 39 is about to move and project the next picture from the film onto the screen and while the dissolving effect as previously described, takes place, the lens 40 returns to the normal position in readiness for the succeeding picture, as shown in Fig. 12.

From the foregoing description it will be recalled that the reciprocation of the lenses 39 and 40 is effected by the action of the cams 42 and 43 on the lens carriers 18 and 19.

The use of the separated carbons constituting two sources of light makes the device, virtually two machines which alternately project pictures from a single standard film, the substitution of the ratchet release device 30—78 forming an improved manner of "framing" the picture, over the common use of the tilting frame below the table.

I claim:—

1. In a motion picture projector, a vertically split lens providing a half lens on each side of the physical axis, each half lens being operated as a whole lens, and a source of light including alternating current electric light carbons disposed in a horizontal plane, the crater of each carbon being optically centered with the companion half lens on the opposite side of the physical axis.

2. In a motion picture projector, an optical system including a vertically split lens, providing two half lenses, each lens being operated as a whole lens, a condenser, and an alternating current electric light behind the condenser including horizontally disposed carbons having craters constituting in effect the apices of cones of light, said condenser, and each of the craters and half lenses on diagonally opposite sides of the physical center of the optical system being optically centralized.

3. In a motion picture projector, means

for continuously moving a film, an alternating current electric light behind the film including horizontally disposed carbons having craters on each side of the physical axis, and constituting in effect the apices of cones of light, a half lens on each side of the physical axis and optically centered with the companion carbon, said half lenses projecting alternate pictures on the film, a shutter for covering the half lenses alternately and means for simultaneously imparting a downward stroke to one of the lenses to move it with the film, and shifting the focal plane of said lens while the other half lens is covered.

4. In a motion picture projector, a half part projection lens located at each side of a physical axis in front of a film arranged to pass through the projector, lens carriers for the half lenses, means for alternately moving the lens carriers in a vertical plane, and guide means coöperating with said carriers for shifting the focal plane of each lens with and in proportion to the movement of the film, including means for adjusting said guide means to vary the amount of shifting of the focal planes.

5. In a motion picture projector, a frame, a lens carrier, means for reciprocating the lens carrier, a lens mounted on the carrier, means carried by the frame for guiding the lens carrier, including resilient arms projecting from the frame, a sliding member mounted on the lens carrier and extending between the arms, and an adjusting screw threaded into the frame adapted to curve the arms and tilt the lens carrier to shift the focal plane of the lens as the lens carrier is reciprocated.

6. In a motion picture projector, the combination of a frame, lens carriers mounted on the frame, a lens holder having a lens, pivotally mounted on each carrier, an ear projected laterally from each holder, said ear having a threaded aperture, and an adjusting screw in the aperture in engagement with the adjacent edge of the lens carrier.

7. In a motion picture projector, a supporting frame having slots, a lens carrier at each side of the frame having slide blocks movable in said frame slots, rollers on the lens carriers, a drive shaft mounted in said frame, double cams mounted on each shaft and engaging the rollers on the lens carriers, and means for forcing contact of the rollers with the cams.

8. In a motion picture projector, the combination with a frame, of a shaft mounted on the frame and having an operating handle and gear, a driving shaft mounted on the frame and having a pinion in mesh with the gear, a fly wheel and a bevel pinion mounted on the opposite end of the drive shaft, a dissolving shutter having a bevel pinion, an intermediate shaft connection between the shutter and the drive shaft, a film take-up reel having a pulley, a pulley mounted on the drive shaft, and a connecting belt between the drive shaft and reel pulleys.

HARRY H. MOMYER.

Witnesses:
F. A. Moses,
F. E. Brown.

1144

R. S. ARTHUR.

APPARATUS FOR RECORDING AND REPRODUCING SOUND.

APPLICATION FILED OCT. 6, 1917.

1,355,523. Patented Oct. 12, 1920.

Fig. 1.

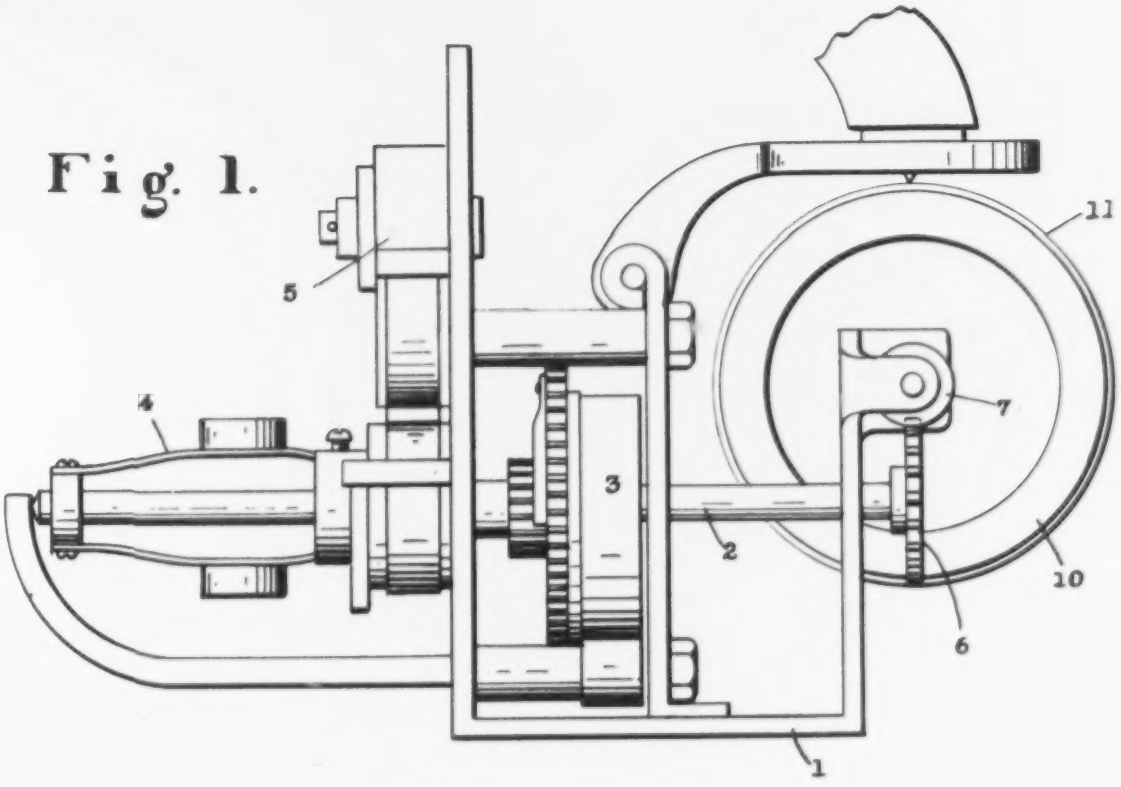

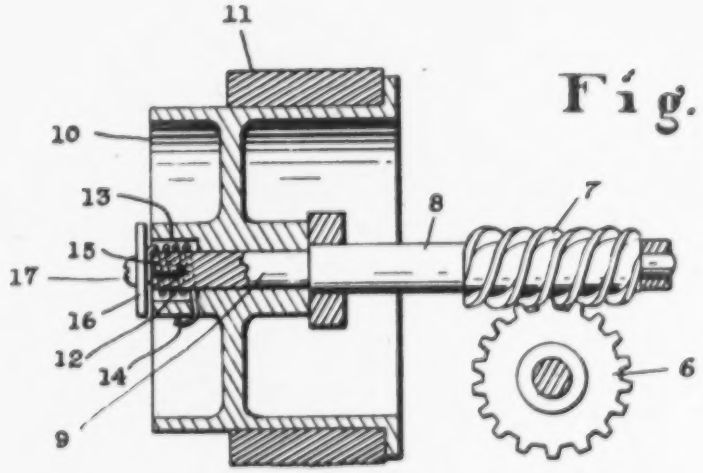

Fig. 2.

WITNESS:

Howard P. King.

INVENTOR:

Richard S. Arthur,

BY

Wright & Everett.

UNITED STATES PATENT OFFICE.

RICHARD S. ARTHUR, OF NEW YORK, N. Y.

APPARATUS FOR RECORDING AND REPRODUCING SOUND.

1,355,523. Specification of Letters Patent. Patented Oct. 12, 1920.

Application filed October 6, 1917. Serial No. 195,023.

To all whom it may concern:

Be it known that I, RICHARD S. ARTHUR, a citizen of the United States of America, and a resident of New York city, in the county of New York and State of New York, have invented new and useful Improvements in Apparatus for Recording and Reproducing Sound, of which the following is a specification.

This invention relates more especially to the transmission of motion to the record, in sound recording and reproducing machines, so as to cause the same to travel beneath the stylus of the sound-box, and the objects of the invention are to prevent the transmission of vibrations and tremors to the record from the driving apparatus, and thus improve the quality of the sound. It will be understood that in many sound recording and reproducing machines, and particularly the less expensive ones, there is considerable irregularity in the movement produced by the motor, which is transmitted to the record, if the connection is a rigid one, and detrimentally affects the sound reproduction. The objects of my invention are to remedy this and to provide a resilient or yielding connection between the motor and the record which shall turn it with sufficient positiveness and at the same time absorb any slight irregularities, such as vibrations or tremors, and give the record a perfectly smooth and uniform motion; to do this simply and inexpensively, and to obtain other advantages and results as may be brought out in the following description.

Referring to the accompanying drawings, in which like numerals of reference indicate the same parts throughout the several views,

Figure 1 is an elevation of a cylinder machine of ordinary and well-known construction illustrating the application of my invention thereto;

Fig. 2 is a section through the cylinder and record thereon.

In the particular embodiment of the invention shown in the drawings, 1 indicates a suitable frame or support in which a driving shaft 2 is mounted and driven from a spring 3 through usual and well-known mechanism having a governor 4 and starting and stopping means 5. On the [illegible] rier in the form of a cylinder 10 for a record 11.

In carrying out my invention, I do not make the cylinder 10 fast upon the shaft end 9, but I wrap around said shaft end a helical spring 12 of light wire, one end of which spring is fast to the shaft and the other to the cylinder, so that as the shaft turns it transmits its motion to the cylinder through said spring. The spring is of such weight and tension that while the cylinder will be properly turned to rotate the record, any irregularities of motion from the motor, such as vibrations or tremors, will be absorbed by the spring and not transmitted to the record. Furthermore, the spring is so arranged that its connection with the cylinder is at an intermediate point in the length of the bearing of the cylinder on the shaft, so that the tension of the spring acts upon the cylinder near its transverse center and prevents any twisting of the cylinder at an angle to the axis of the shaft which would cause a frictional binding connection of the cylinder on the shaft. Obviously the spring 12 can be arranged in any suitable manner, but for purposes of illustration I have shown the end of the hub of the cylinder recessed as at 13 to loosely receive the spring 12, one end 14 of said spring passing through an aperture in the wall of said recess at its inner end and being secured thereat. The other end 15 of the spring is laid over upon the extremity of the shaft end 9, preferably in the form of an eye, so that it is clamped to said shaft end by a washer 16 held by a screw 17 threaded into the shaft. Any other suitable mounting of the spring may be employed, however.

While I have so far found it more desirable to transmit motion through the wire spring so that it tends to wind it up, it is obviously within the scope of my invention to transmit the motion so as to unwind them, if desired.

I have found that sound reproduced by my improved method is a great deal more natural and satisfactory, especially where inexpensive machines are employed whose motors cannot be made with great nicety and exactness and the record carrier must be light and thus susceptible to vibrations

APPARATUS FOR RECORDING AND REPRODUCING SOUND.

APPLICATION FILED OCT. 6, 1917.

1,355,523. **Patented Oct. 12, 1920.**

Fig. 1.

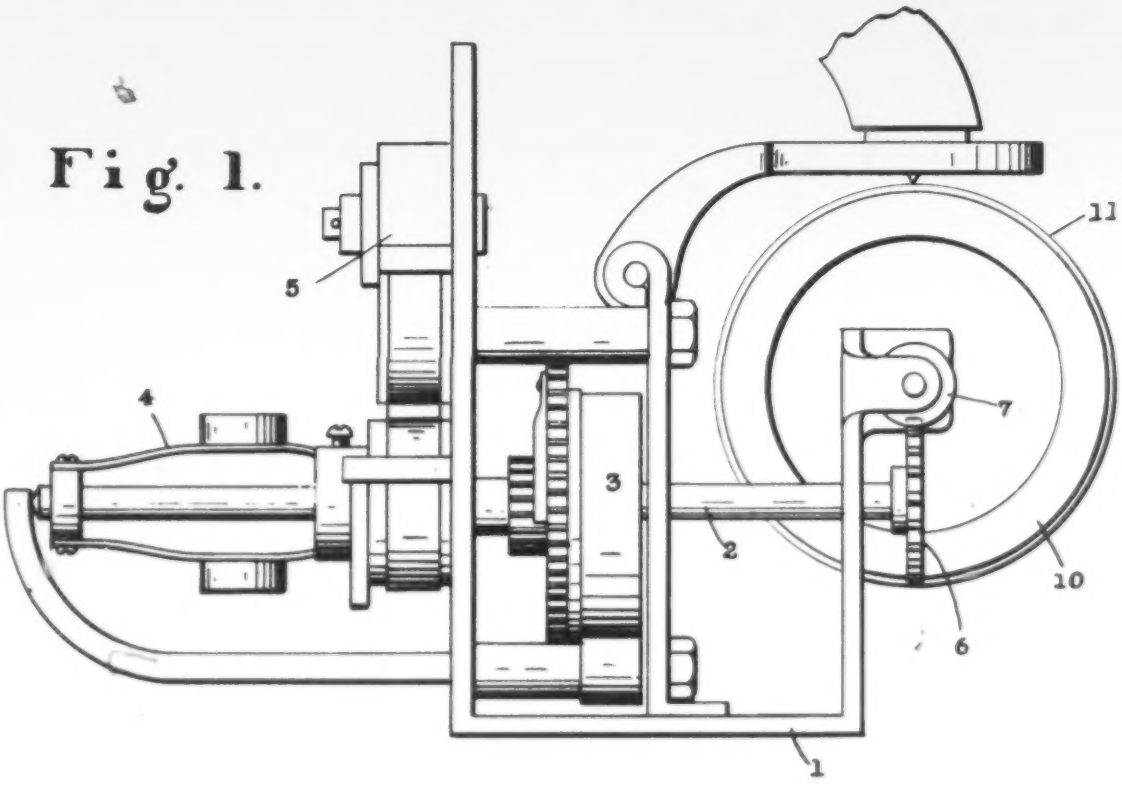

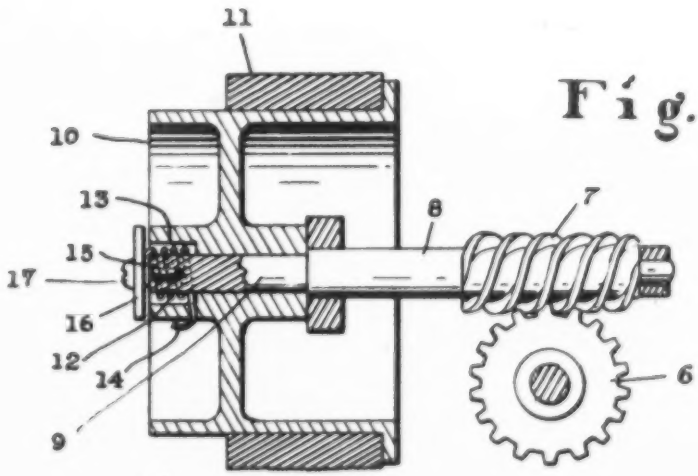

Fig. 2.

WITNESS:

Howard P. King.

INVENTOR:

Richard S. Arthur,

By Marble & Everett,

ATTORNEYS.

UNITED STATES PATENT OFFICE.

RICHARD S. ARTHUR, OF NEW YORK, N. Y.

APPARATUS FOR RECORDING AND REPRODUCING SOUND.

1,355,523. Specification of Letters Patent. Patented Oct. 12, 1920.

Application filed October 6, 1917. Serial No. 195,023.

To all whom it may concern:

Be it known that I, RICHARD S. ARTHUR, a citizen of the United States of America, and a resident of New York city, in the county of New York and State of New York, have invented new and useful Improvements in Apparatus for Recording and Reproducing Sound, of which the following is a specification.

This invention relates more especially to the transmission of motion to the record, in sound recording and reproducing machines, so as to cause the same to travel beneath the stylus of the sound-box, and the objects of the invention are to prevent the transmission of vibrations and tremors to the record from the driving apparatus, and thus improve the quality of the sound. It will be understood that in many sound recording and reproducing machines, and particularly the less expensive ones, there is considerable irregularity in the movement produced by the motor, which is transmitted to the record, if the connection is a rigid one, and detrimentally affects the sound reproduction. The objects of my invention are to remedy this and to provide a resilient or yielding connection between the motor and the record which shall turn it with sufficient positiveness and at the same time absorb any slight irregularities, such as vibrations or tremors, and give the record a perfectly smooth and uniform motion; to do this simply and inexpensively, and to obtain other advantages and results as may be brought out in the following description.

Referring to the accompanying drawings, in which like numerals of reference indicate the same parts throughout the several views,

Figure 1 is an elevation of a cylinder machine of ordinary and well-known construction illustrating the application of my invention thereto;

Fig. 2 is a section through the cylinder and record thereon.

In the particular embodiment of the invention shown in the drawings, 1 indicates a suitable frame or support in which a driving shaft 2 is mounted and driven from a spring 3 through usual and well-known mechanism having a governor 4 and starting and stopping means 5. On the driving shaft is a worm wheel 6 engaging a worm 7 on the record shaft 8, which record shaft is shown in this particular illustration as having an end 9 to receive a record carrier in the form of a cylinder 10 for a record 11.

In carrying out my invention, I do not make the cylinder 10 fast upon the shaft end 9, but I wrap around said shaft end a helical spring 12 of light wire, one end of which spring is fast to the shaft and the other to the cylinder, so that as the shaft turns it transmits its motion to the cylinder through said spring. The spring is of such weight and tension that while the cylinder will be properly turned to rotate the record, any irregularities of motion from the motor, such as vibrations or tremors, will be absorbed by the spring and not transmitted to the record. Furthermore, the spring is so arranged that its connection with the cylinder is at an intermediate point in the length of the bearing of the cylinder on the shaft, so that the tension of the spring acts upon the cylinder near its transverse center and prevents any twisting of the cylinder at an angle to the axis of the shaft which would cause a frictional binding connection of the cylinder on the shaft. Obviously the spring 12 can be arranged in any suitable manner, but for purposes of illustration I have shown the end of the hub of the cylinder recessed as at 13 to loosely receive the spring 12, one end 14 of said spring passing through an aperture in the wall of said recess at its inner end and being secured thereat. The other end 15 of the spring is laid over upon the extremity of the shaft end 9, preferably in the form of an eye, so that it is clamped to said shaft end by a washer 16 held by a screw 17 threaded into the shaft. Any other suitable mounting of the spring may be employed, however.

While I have so far found it more desirable to transmit motion through the wire spring so that it tends to wind it up, it is obviously within the scope of my invention to transmit the motion so as to unwind them, if desired.

I have found that sound reproduced by my improved method is a great deal more natural and satisfactory, especially where inexpensive machines are employed whose motors cannot be made with great nicety and exactness and the record carrier must be light and thus susceptible to vibrations and tremors. In such cases I am able by my invention to change the character of sound reproduced to a marked degree, and to secure the same effect for which it has

heretofore been necessary to employ an expensive machine.

Various detail modifications and changes may be made in carrying out my invention without departing from the spirit and scope of the invention, and I do not wish to be understood as restricting myself except as required by the following claims when construed in the light of the prior art.

Having thus described the invention, what I claim is:

1. In a talking machine, the combination of a record shaft, a record carrier having a hub mounted on said shaft, and a coil spring surrounding said shaft within said hub, one end of said spring being connected to said hub at a point intermediate the length of its bearing on the shaft and the other end of said spring being connected to said shaft.

2. In a talking machine, the combination of a record shaft, a record carrier having a hub receiving said shaft, said hub providing at one end of itself a chamber around said shaft and opening through the end of the hub, a spiral spring surrounding the shaft in said chamber and secured at its inner end to the hub, and means at the outer end of the hub for adjustably securing the other end of the spring to the shaft.

3. In a talking machine, the combination of a record shaft, a record carrier having a hub receiving said shaft, said hub providing at one end of itself a chamber around said shaft and opening through the end of the hub, a spiral spring in said chamber secured at its inner end to the hub, and means at the outer end of the hub for securing the other end of the spring to the shaft and holding the record carrier on the shaft.

In testimony whereof I have signed this specification in the presence of two subscribing witnesses.

RICHARD S. ARTHUR.

Witnesses:
HOWARD P. KING,
MILDRED E. BROOKS.